ELECON EPC PROJECTS LIMITED

INSTALLATION, OPERATION, MAINTENANCE
&
SPARE PARTS MANUAL FOR
FULL PORTAL SCRAPER RECLAIMER

ORDER NO: CO/2281
MACHINE NO: HM/573

: MANUFACTURER :

ELECON EPC PROJECTS LIMITED

VALLABH VIDYANAGAR
GUJARAT - 388 120

ELECON EPC PROJECTS LIMITED

FULL PORTAL TYPE SCRAPER RECLAIMER FOR DAP/NPK

INSTALLATION, OPERATION, MAINTENANCE
&
SPARE PARTS MANUAL

ORDER NO: CO/2281
MACHINE NO: HM/573

: CLIENT :

M/s. INDIAN FARMERS FERTILISER CO-OP. LTD.

: PROJECT :

M/s. INDIAN FARMERS FERTILISER CO-OP. LTD.
(PARADEEP UNIT)
VIII - MUSADIA, PARADEEP
DIST. : JAGATSINGHPUR
ORISSA - 754 142

: MANUFACTURER :

ELECON EPC PROJECTS LIMITED
VALLABH VIDYANAGAR
GUJARAT - 388120

ELECON EPC
ELECON EPC PROJECTS LIMITED

I N D E X

INSTALLATION, OPERATION, MAINTENANCE & SPARE PARTS MANUAL FOR FULL PORTAL TYPE SCRAPER RECLAIMER

SR.NO	DESCRIPTION
1	**SECTION-I** OPERATING AND MAINTENANCE INSTRUCTION FOR FULL PORTAL TYPE SCRAPER RECLAIMER
2	**SECTION-II** INSTALLATION, OPERATION AND MAINTENANCE INSTRUCTION FOR IMPORTANT COMPONENTS
3	**SECTION-III** SPARE PARTS LIST FOR FULL PORTAL TYPE SCRAPER RECLAIMER

ELECON EPC PROJECTS LIMITED

SECTION - I

OPERATING & MAINTENANCE INSTRUCTION

ELECON EPC
ELECON EPC PROJECTS LIMITED

I N D E X

S E C T I O N -I

OPERATING & MAINTENANCE INSTRUCTION FOR

FULL PORTAL TYPE SCRAPER RECLAIMER

SR.NO.	DESCRIPTION	PAGE NO
1	TECHNICAL SPECIFICATION OF FULL PORTAL TYPE SCRAPER RECLAIMER	1
2	DESCRIPTION OF FULL PORTAL TYPE SCRAPER RECLAIMER MACHINE	6
3	OPERATIONAL WRITE-UP (MECHANICAL) OF FULL PORTAL TYPE SCRAPER RECLAIMER	8
4	PREVENTIVE MAINTENANCE INSTRUCTIONS	20
5	INSPECTION CHECK LIST BEFORE OPERATION	25
6	TIGHTENING TORQUES SHEET	26
6	CHECK LIST FOR M/C OPERATOR AND SUPERVISOR	27
7	INSPECTION CHECK LIST DURING OPERATION.	28
8	SAFETY INSTRUCTION AND FIRE PROTECTION	29
9	ABNORMAL AND EMERGENCY OPERATION	30
10	REPAIR AND DISMANTLING INSTRUCTIONS	31

ELECON EPC PROJECTS LIMITED

TECHNICAL SPECIFICATION

WORKS ORDER NO : CO/2281 **MACHINE NO: HM/573**
GEN. ARRGT. DRG. NO : T09798/OS
PROJECT : DAP/NPK PLANT
CLIENT : M/S IFFCO LTD. (PARADEEP UNIT)

[A] GENERAL DATA :

1.	**TYPE OF STACKER**	**: FULL PORTAL SCRAPER RECLAIMER, WITH INDEPENDENT MAIN AND AUXILIARY BOOM.**
2.	MATERIAL TO BE HANDLED	: NPK / DAP
3.	MATERIAL DENSITY (T/CU.M)	: 0.960
4.	MATERIAL SIZE (mm)	: 10
5.	MOISTURE CONTENT	: 5 TO 10 % Max.
6.	ANGLE OF REPOSE (DEGREE)	: 20, 29, 35
7.	TEMP. IN SILO (DEG. C)	: 48 Deg.
8.	SILO BUILDING WIDTH (M)	: 45.000 (CLEAR INSIDE)
9.	NO. OF STOCKPILE	: 1 NO.
10.	SILO BUILDING LENGTH (M)	: 150.000 (C/C LENGTH)
11.	STOCKPILE LENGTH (M)	: 129.000
12.	STOCKPILE HEIGHT (M)	: 11.935
13.	STOCKPILE CAPACITY (T)	: REFER DRG. NO. T09219/1
14.	RECLAIM CAPACITY (MTPH)	: 300 (RATED) 350 (DESIGN)

[B] RAIL TRAVEL MECHANISM

1.	RAIL TYPE / SIZE	: ISCR 100 (BY CLIENT)
2.	RAIL CENTERS	: 40.350 M

3.	WHEEL DIAMETER	: 630 MM
4.	NOS. OF TRAVEL WHEELS	: 7 NOS.
	- OF WHICH, POWERED	: 4 NOS.
	- OF WHICH, IDLE	: 3 NOS.
5.	TRAVEL SPEEDS	
	- OPERATIONAL	: 1 TO 2 M/Min.
	- TRANSPORTATION (IDLE)	: 10 M/Min.
6.	TRAVEL LENGTH	: 127.150 M (OPERATIONAL) 134.262 M (MAX.)

DRIVE UNIT FOR TRAVEL MECHANISM

1.	NO. OF DRIVE	: 2 NOS.
2.	MOTOR	: 2 x 5.5 KW, 150 - 1500 RPM, WITH VVVF DRIVE, A.C. SQ. CAGE
3.	COUPLING	: FLEXIBLE BRAKE COUPLING TYPE & SIZE : FBC-200 WITH 200 MM DIA. BRAKE DRUM. MAKE : ELECON
4.	BRAKE	: A.C. THRUSTOR OPERATED JAW BRAKE SUITABLE TO 200 MM DIA. BRAKE DRUM. THRUSTOR : ET-240 OR EQU. MAKE: ELECON
5.	GEAR	: BEVEL HELICAL (HOLLOW OUTPUT SHAFT) WITH S.D. SIZE: PWD 18, 125:1 RATIO, RATING: 11 KW (NOMINAL) MAKE: ELECON.
6.	OPEN PAIR GEAR	: PINION - 25 TEETH SPUR WHEEL - 57 TEETH

[C] MAIN SCRAPER BOOM

1.	CHAIN SPEED	: 0.70 M/SEC (Approx).
2.	CHAIN PITCH	: 250 MM

3.	CHAIN TYPE	: BLOCK LINK CHAIN STRENGTH : 500 KN FACTOR OF SAFETY : 10 MIN. MAKE : ROLCON
4.	DRIVE SPROCKET	: 4 TEETH, 653 MM P.C.D.
5.	TAKE-UP SPROCKET	: 653 MM P.C.D.
6.	SPROCKET CRS.	: 21.000 M
7.	SIZE OF BLADE (L x B)	: 1400 MM x 250 MM
8.	BLADE PITCH	: 500 MM
9.	CHAIN TENSIONING TYPE	: MANUAL TAKE-UP

DRIVE UNIT FOR SCRAPER CHAIN

1.	MOTOR	: 1 x 55 KW, 1500 RPM, A.C. SQ. CAGE MOTOR
2.	COUPLING	: FLUID COUPLING WITH GEAR COUPLING TYPE & SIZE: CDR-R 420 + ED 1000 MAKE : ELECON
3.	GEAR	: BEVEL HELICAL (HOLLOW OUTPUT SHAFT) WITH S.D. SIZE: KCH 315, 71:1 RATIO, RATING: 90 KW (NOMINAL) MAKE: ELECON.

BOOM LUFFING MECHANISM

1.	HOISTING SPEED	
	a) FAST HOISTING (IDLE)	: 12.0 M/MIN
	b) MICRO (OPERATIONAL)	: 1.2 M/MIN
2.	MOTOR	: 1 x 15 KW, A.C. VVVF DRIVE
3.	BRAKE	: D.C. EM DISC TYPE
4.	WIRE ROPE	
	a) SIZE	: 16mm DIA., 6 x 36 CONT. G.I. STEEL CORE WIRE ROPE
	b) TENSILE DESIGNATION	: 161 Kg / MM^2
	c) STANDARD	: IS 2266

ELECON EPC
ELECON EPC PROJECTS LIMITED

[D] AUXILIARY SCRAPER BOOM

1.	CHAIN SPEED	: 0.70 M/SEC (Approx).
2.	CHAIN PITCH	: 250 MM
3.	CHAIN TYPE	: BLOCK LINK CHAIN STRENGTH : 500 KN FACTOR OF SAFETY : 10 MIN. MAKE : ROLCON
4.	DRIVE SPROCKET	: 4 TEETH, 653 MM P.C.D.
5.	TAKE-UP SPROCKET	: 653 MM P.C.D.
6.	SPROCKET CRS.	: 14.000 M
7.	SIZE OF BLADE (L x B)	: 1000 MM x 200 MM
8.	BLADE PITCH	: 500 MM
9.	CHAIN TENSIONING TYPE	: MANUAL TAKE-UP

DRIVE UNIT FOR SCRAPER CHAIN

1.	MOTOR	: 1 x 30 KW, 1500 RPM, A.C. SQ. CAGE MOTOR
2.	COUPLING	: FLUID COUPLING WITH GEAR COUPLING TYPE & SIZE: CDR-R 370 + ED 1000 MAKE : ELECON
3.	GEAR	: BEVEL HELICAL (HOLLOW OUTPUT SHAFT) SIZE: KCH 200, 28:1 RATIO, RATING: 48 KW (NOMINAL) MAKE: ELECON.

BOOM LUFFING MECHANISM

1.	HOISTING SPEED	
	a) FAST HOISTING (IDLE)	: 12.0 M/MIN
	b) MICRO (OPERATIONAL)	: 1.2 M/MIN
2.	MOTOR	: 1 x 15 KW, A.C. VVVF DRIVE
3.	BRAKE	: D.C EM DISC TYPE
4.	WIRE ROPE	
	a) SIZE	: 12mm DIA., 6 x 36 CONT. G.I. STEEL CORE WIRE ROPE
	b) TENSILE DESIGNATION	: 91 Kg / MM^2
	c) STANDARD	: IS 2266

ELECON EPC
ELECON EPC PROJECTS LIMITED

[E] LUBRICATION SYSTEM

1.	MAIN BOOM SIDE	: MOTORISED LUBRICATION 0.75 KW x 1500 RPM
2.	AUXILIARY BOOM SIDE	: MOTORISED LUBRICATION 0.75 KW x 1500 RPM

[F] ELECTRICAL HOUSE

1.	LOCATION	: HEAD BEAM-A SIDE WITH 1.5 TONE SPLIT A.C. UNIT

[G] OPERATOR CABIN

1.	LOCATION	: HEAD BEAM-A SIDE WITH 1.5 TONE SPLIT A.C. UNIT

[H] CABLE REELING DRUM

1.	POWER C.R.D.	: MONOSPIRAL TYPE MAKE : ELECON
2.	CONTROL C.R.D.	: MONOSPIRAL TYPE MAKE : ELECON

[I] DELUMPER

1.	CAPACITY	: 50 TPH (RATED) 60 TPH (DESIGN)
2.	FEED SIZE	: 2.5 MM TO 175 MM
3.	MOTOR	: 1 x 22 KW, 1000 RPM, A.C SQ. CAGE MOTOR
4.	ROTOR	: DIAMETER - 400 MM
5.	PULLY	: 1 NO. 315 DIAMETER 1 NO. 400 DIAMETER

[J] SKIRT PLATE

1.	SEALING RUBBER	: 10 mm THK NATURAL RUBBER

[K] MAIN LINE RECLAIM CONVEYOR (IN M/S IFFCO SCOPE)

1.	CAPACITY	: 300 MTPH (RATED) 350 MTPH (DESIGN)
2.	BELT WIDTH	: 1400 MM
3.	BELT TROUGH	: 35 DEGREE
4.	BELT SPEED	: 0.5 M/SEC MINIMUM (Recommended)
5.	CARRYING IDLER PITCH	: 600MM (Recommended)

ELECON EPC PROJECTS LIMITED

DESCRIPTION OF FULL PORTAL TYPE SCRAPER RECLAIMER MACHINE :-

RAIL MOUNTED FULL PORTAL TYPE SCRAPER RECLAIMER

The arrangement of design of **Full Portal Type Scraper Reclaimer** is to be generally as shown in our general arrangement drawing and as per our technical specifications and data sheets. The scraper reclaimer comprises of the following:

a) The travel chassis made of welded plate steel construction, the travel and the guide wheels in cast steel, the axles in carbon steel, the bearing housing with anti-friction bearings, the drive through spur and pinion wheel, the bevel helical hollow shaft gear box, the thruster operated double shoe jaw brake, resilient type brake wheel coupling and the A.C Motor with frequency converter.

   Adequate numbers of rail scrapers are provided. For the travel drive AC motor with frequency converter has been provided to achieve the operational and fast travel speed.

   Anti-skewing correction travel has been done by electrical means through speed variation.

b) The portal frame in plate steel construction, the transfer chute from fabricated plate and rolled steel sections, the control platform, the pivot connection for the scraper, the support for the hoist and the scraper drives, the stair case with hand railings for access to the electric platform, the operator's cabin, the scraper drives and hoist drives.

   The chute main plate of M.S. construction with liner plate provided.
   The skirt plate of MS. Construction with liner plate provided.

   Along with the head beam of the guided side (main boom side), the portal forms a rigid system. The other end is secured by the second head beam by a pivot support. These three points system is statically indeterminate, and consequently this tripod arrangement accepts slight variation of track levels.

c) The scraper boom is welded plate construction with horizontal and diagonal rolled steel section ties, the replaceable scraper guides at bottom side in bolted construction, the mounting for the sprocket shafts and tension devices.

d) The scraper chain is block link type chain; steel bolts washers, locking pin, and the attachment for the blades.

   The scraper blades are of tiscral plate with welded on teeth of carbon steel construction on the sides and lower edge of the blade, and the attachment for connecting to the scraper chain.

   The mechanically operated chain-tensioning device, located at the ends of the scraper boom [at the non-drive sprocket].

e) The mechanical parts for the scraper chain drives comprising of the bevel helical hollow shaft gear unit, the fluid coupling with gear coupling and the motor. The main boom scraper drive is a direct drive, whereas the auxiliary boom drive would be through chain and sprocket.

f) The hoist mechanism consisting of the precision and the fast hoist mechanism, the wire ropes, the rope sheaves with anti-friction bearings (for the main and auxiliary scraper boom).

g) The lubrication device is comprise of the following:

Group grease lubrication system with motorized grease pump for the bearings of the scraper chain drive shaft and the bearings of the travel mechanism on the auxiliary boom side, and grease lubrication system with motorized grease pump for the main boom scraper chain drive shaft bearings and the bearings of the travel mechanism on main boom side.

h) The operator's cabin is to be in SS sheet metal construction with double walled insulated roof, and with adequate safety glass panels in rubber sheathing. The control desk would be located inside the cabin. The lighting fixture, swiveling operator's chair and A.C. Unit provided. Walkway provided with safety handrails on the side of the cabin for cleaning the glass panels.

i) The electric house is to be double walled sheet metal construction, with insulation between the two walls, and be adequately sized to accommodate the machine M.C.C. and electrical panels. A.C. Unit is provided.

oooooooooooOOOOOOOOOoooooooooo

ELECON EPC PROJECTS LIMITED

OPERATIONAL WRITE-UP (MECHANICAL) OF FULL PORTAL TYPE SCRAPER RECLAIMER :-

Stacking and Reclaiming Operation

Note- Stacking Shuttle Conveyor is not in scope of Elecon supply, Hence not considered in program of Reclaiming Operation.

The storage is by overhead shuttle conveyor by Clients, equipped with one-way discharge chute.

We propose that the stacking be carried out by ***cone-pile cum cone-shell method of stacking*** in the silo storage area. This will minimize dust nuisance and material degradation.

The cone-pile cum cone-shell mode of stacking comprises of forming an initial cone pile to the full height, at one end of the stockpile area. During this period, the shuttle conveyor kept in one steady, fixed position.

After the formation of the initial cone pile, the shuttle conveyor is moved in the direction of the stockpile formation by 500-mm approx., and stopped. This allows the material discharge to fall on to the upper slope face of the previously formed conical pile and the material gently purls down the slope face, minimizing dust nuisance and material degradation. This constitutes formation of stockpile by the cone shell mode of stacking.

When the stockpile reaches the maximum height, the shuttle conveyor again advanced by 500 mm (predetermined), and the stacking procedure is continue with the shuttle conveyor in steady fixed position.

During the forward/backward movement of shuttle conveyor during stockpiling operation, the stacking main-line conveyor is kept in operation; i.e. the material flow is not been stopped. This procedure is continued till the completion of the full/required stockpile length.

Reclaiming is generally started at the beginning of the stockpile peak.

1) T10494/1 - Showing Reclaiming dimension of stockpile (Partial pile reclaiming).
2) T09382/1 - Showing Main Boom and Auxiliary Boom Position during reclaiming operation.
3) T09804/0 - Layout of Machines Location/Orientation.

I- Stockpile Partial Length Reclaiming.

Considering two numbers of reclaim machines on same rail partial pile reclaiming operation perform by each machine.

At the start of the reclaim operations, with the reclaim conveyor in operation, the reclaimer is fast traversed (manual control) to the point of begin of the reclaim operations, with both the main and auxiliary booms kept in the maximum luffed position, with the scraper chains in operation, preferably.

The main scraper boom is now lower (by manual control) to just touch the stockpile top face and the travel movement is started by manual control.

During this first run, and probably for one or two more runs (under manual control), the operator should be careful to ensure that the scraper blades does not embed or cut over deeply into the

stockpiled material. (Due to the possible irregular formation of the stockpile face, dependent on the skill of the shuttle conveyor operator during stockpile formation). After ensuring that the stockpile face is compatible/uniform level and suitable for auto-operation, then the machine can be switched to auto-operation.

If we consider the travel of the reclaimer to start from the L.H.S. and movement to the R.H.S; the reclaimer travels a predetermined travel distance, stops, the main scraper boom is automatically lowered by a pre-determined degree, and the scraper reclaimer travels in the reverse direction, automatically.

The lowering of the boom and travel reversal at the end of each travel run is automatic and controlled by switches. The machine travel increased by Y distances in LH end side and travel decreased by Y distances in RH end side as shown in drawing (T10494/1). After reclaiming certain heights RH side travel decreased gradually but LH side travel remain same as shown in drawing (T10494/1).

When main scraper boom reached K1 position, auxiliary scraper boom comes in operation and deliver the material toward the main boom.

Increase of travel and boom positions shown in our drawings and design the operation logic.

Reclaiming is always starting after the stockpile has been built up to the full height and length / a reasonable length.

OoooooooOOOOOOOOoooooooO

DRG NO T10494/1 ISSUE

DO NOT SCALE

IF IN DOUBT ASK

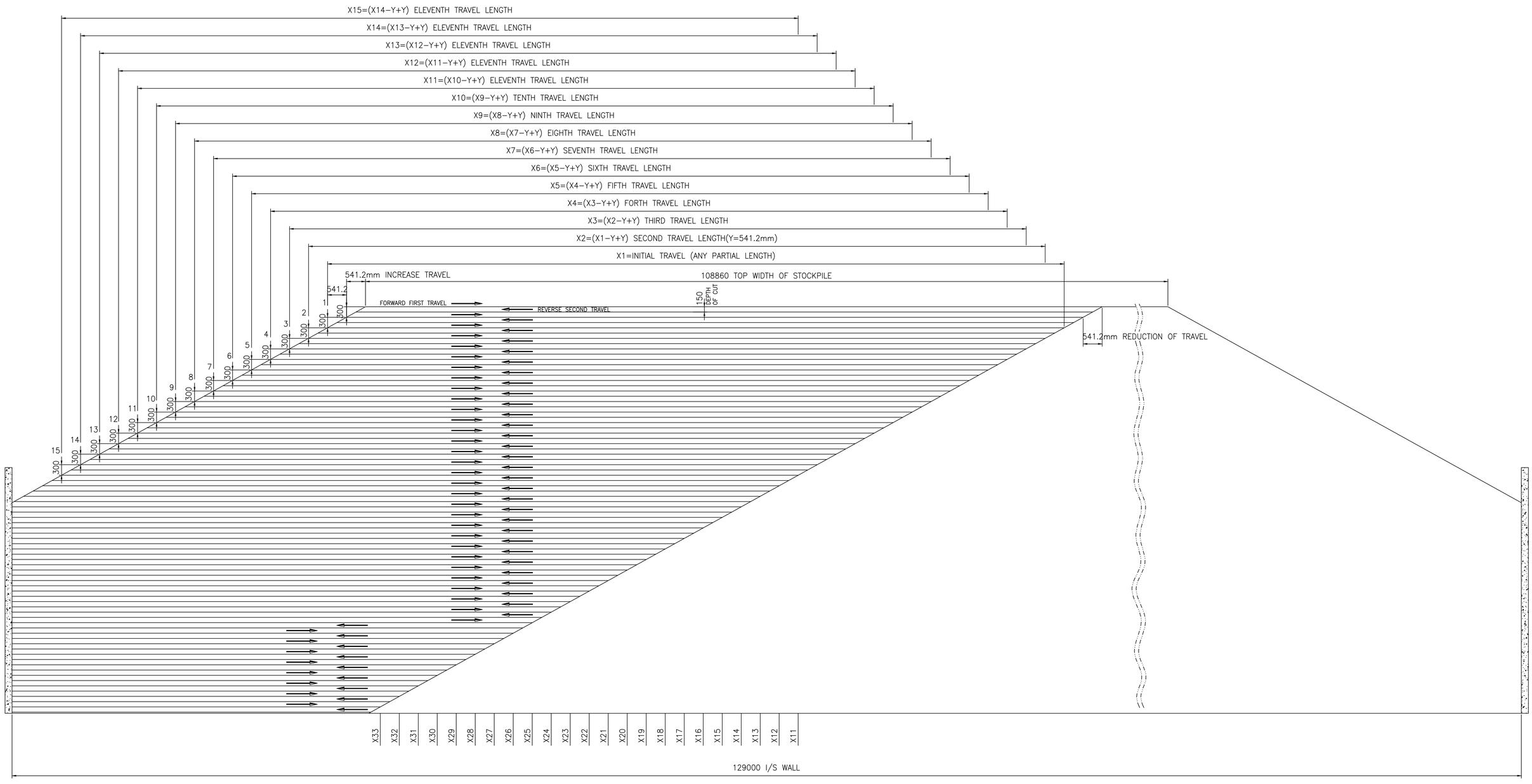

RECLAIMING OF PARTIAL STOCKPILE – 29° REPOSE ANGLE

1) INITIAL 2 CUT BY MANUAL MODE, TAKE DEPTH OF CUT APPROXIMATE 150mm PER CUT.
2) AFTER 2 CUT MACHINE IS SWITCHED OVER TO AUTO MODE, DEPTH OF CUT REMAIN SAME.
3) AFTER EVERY 2 CUT MACHINE TRAVEL LENGTH IS TO BE INCREASED BY "Y" LENGTH (+541.2mm) ON L.H. SIDE AND REDUCED "Y" LENGTH (−541.2mm) ON R.H. SIDE.
4) OTHER STEPS AS PER SR. NO. 3 IS TO BE CONTINUED WITH NEXT DEPTH OF CUT UP TO POINT−15.
5) AFTER POINT−15 MACHINE L.H. SIDE TRAVEL IS FIXED AND R.H. SIDE TRAVEL IS TO BE REDUCED BY "Y" LENGTH (−541.2mm) AFTER EVERY TWO CUT FOR REMAINING RECLAIMING OPERATION (UP TO POINT−33).

NOTE :
- DEPTH OF CUT INDICATED CONSIDERING RATED CAPACITY, 50% BLADE FILING FACTOR, BULK DENSITY AND TRAVEL SPEED AS INDICATED IN APPROVED TECH. SPECIFICATION.
- DEPTH OF CUT MAY CHANGE IF ANY OF ABOVE PARAMETERS CHANGE.
- REFER DRAWING NO. T09382/1 SHOWING SCRAPER BOOM OPERATING POSITION.

ELE.	STRU	MECH	SEC	NAME	DATE	ISSUE	AMENDMENTS

DRAWN	R. K. Patel	31/01/13	
CHECK	R. K. Patel	31/01/13	
APPROVED SEC.			
APPROVED MEC	R. P. Jaria	31/01/13	
APPROVED STR.			
APPROVED ELE.			

SCALE : –

RECLAIMING DIMENSION OF STOCKPILE

THIS DRAWING IS THE PROPERTY OF ELECON ENGINEERING CO. LTD. VALLABH VIDYANAGAR GUJARAT. LOANED TO THE RECIPIENT WHO AGREES THAT IT SHALL NOT BE GIVEN OUT COPIED OR DUPLICATED FOR THE USE OF ANOTHER BUT USED ONLY BY THE RECIPIENT FOR THE PURPOSE OF MAINTAINING THE EQUIPMENT TO WHICH IT REFERS.

MAIN GR. NO.

SUB GR. NO.

ELECON

ORDER NO. CO/2223 CO/2281 M/C NO. ALL

DRG. NO T10494/1 ISSUE

T08465/1

USER SIZE 820x570

DRG NO T09382/1 ISSUE 1

DO NOT SCALE

IF IN DOUBT ASK

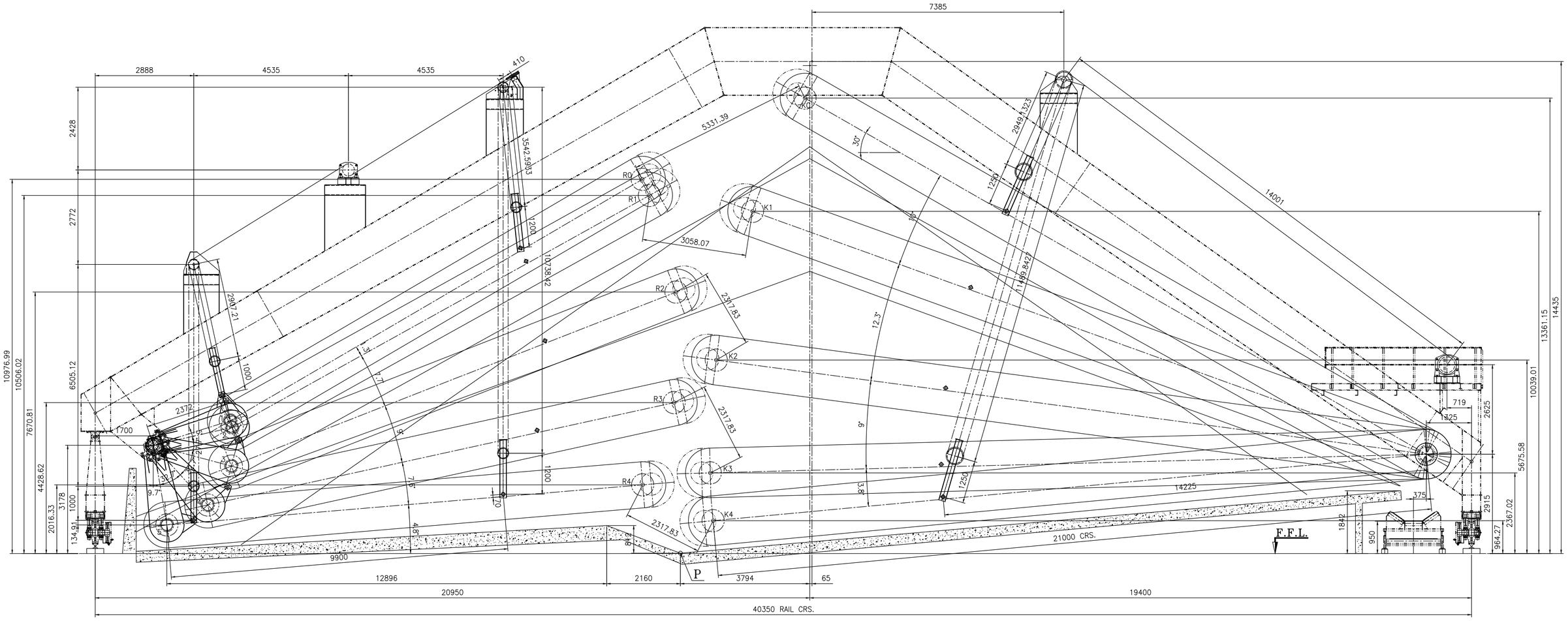

ELEVATION

HEIGHT FROM F.F.LEVEL							
AUXILARY SCRAPER BOOM				MAIN SCRAPER BOOM			
POSITION	HEIGHT	ROTATION	CAM DEGREE	POSITION	HEIGHT	ROTATION	CAM DEGREE
R0	10976.99	0.000	0.00	M1	13361.15	0.000	0.00
R1	10506.02	1.483	11.12	M2	10039.01	6.862	51.46
R2	6988.24	10.175	76.31	M3	5675.58	15.191	113.93
R3	5030.61	19.531	146.48	M4	2367.02	21.165	158.73
R4	3332.00	26.177	196.33	M5	964.27	23.640	177.30

NOTE :

1) GIVEN PERAMETERS ARE APPROXIMATE AND TO BE MEASURED PRACTICALY AND ADJUSTED AT SITE.
2) ROTATION OF MAIN AND AUXILIARY BOOM HOIST DRUM BASE ON FOLLOWING HOIST DRUM DIAMETER.
   – MAIN BOOM HOIST DRUM DIAMETER – 460 MM.
   – AUXILIARY BOOM HOIST DRUM DIAMETER – 350 MM.

ALL DIMENSIONS ARE IN mm.

ELE.	STRU	MECH	SEC	NAME	DATE	ISSUE	AMENDMENTS
		RPJ	RPJ	RKP	08/10/12	1	DRG. REVISED AS PER FINAL DIMENSION.

DRAWN	R. K. Patel	09/03/12
CHECK	R. P. Jaria	10/03/12
APPROVED SEC.		
APPROVED MEC	R. P. Jaria	10/03/12
APPROVED STR.		
APPROVED ELE.		

SCALE : 1:60

SCRAPER BOOM OPERATING POSITION

THIS DRAWING IS THE PROPERTY OF ELECON ENGINEERING CO. LTD. VALLABH VIDYANAGAR GUJARAT. LOANED TO THE RECIPIENT WHO AGREES THAT IT SHALL NOT BE GIVEN OUT COPIED OR DUPLICATED FOR THE USE OF ANOTHER BUT USED ONLY BY THE RECIPIENT FOR THE PURPOSE OF MAINTAINING THE EQUIPMENT TO WHICH IT REFERS.

MAIN GR. NO.

SUB GR. NO.

ELECON EPC
ELECON EPC PROJECTS LIMITED

ORDER NO. CO/2223

M/C NO. HM/545

DRG. NO T09382/1 ISSUE 1

T08925/1

USER SIZE 820x570

01 .2

RELEASED

ELECON EPC PROJECTS LIMITED

LOGIC/INTERLOCK MATRIX FOR MAIN & AUXILIARY BOOM MOVEMENTS

Interlock program for Auxiliary and main boom shall be programmed as per following method.

Downward movements of Scraper booms (Refer Drawing No. T09382/1 Rev.-1)

1) Main scraper boom will move from maximum up position Point-K1 to maximum down position Point-K4, when Auxiliary scraper boom will be in maximum up position Point-R1.
2) Auxiliary scraper boom will move from maximum up position Point-R1 to maximum down position Point-R4, when Main scraper boom will be in maximum up position Point-K1.
3) Auxiliary scraper boom will move downward up to position Point-R2, when Main scraper boom will be in position Point-K2.
4) Auxiliary scraper boom will move downward up to position Point-R3, when Main scraper boom will be in position Point-K3.
5) Auxiliary scraper boom will move downward up to position Point-R4, when Main scraper boom will be in position Point-K4.

Upward movements of Scraper booms (Refer Drawing No. T09382/1 Rev.-1)

1) Main scraper boom will move upward up to position Point-K3, when Auxiliary scraper boom will be in position Point-R3.
2) Main scraper boom will move upward up to position point-K2, when Auxiliary scraper boom will be in position Point-R2.

Bar Chart for Downward movements of Scraper booms (Refer Drawing No. T09382/1 Rev.-1)

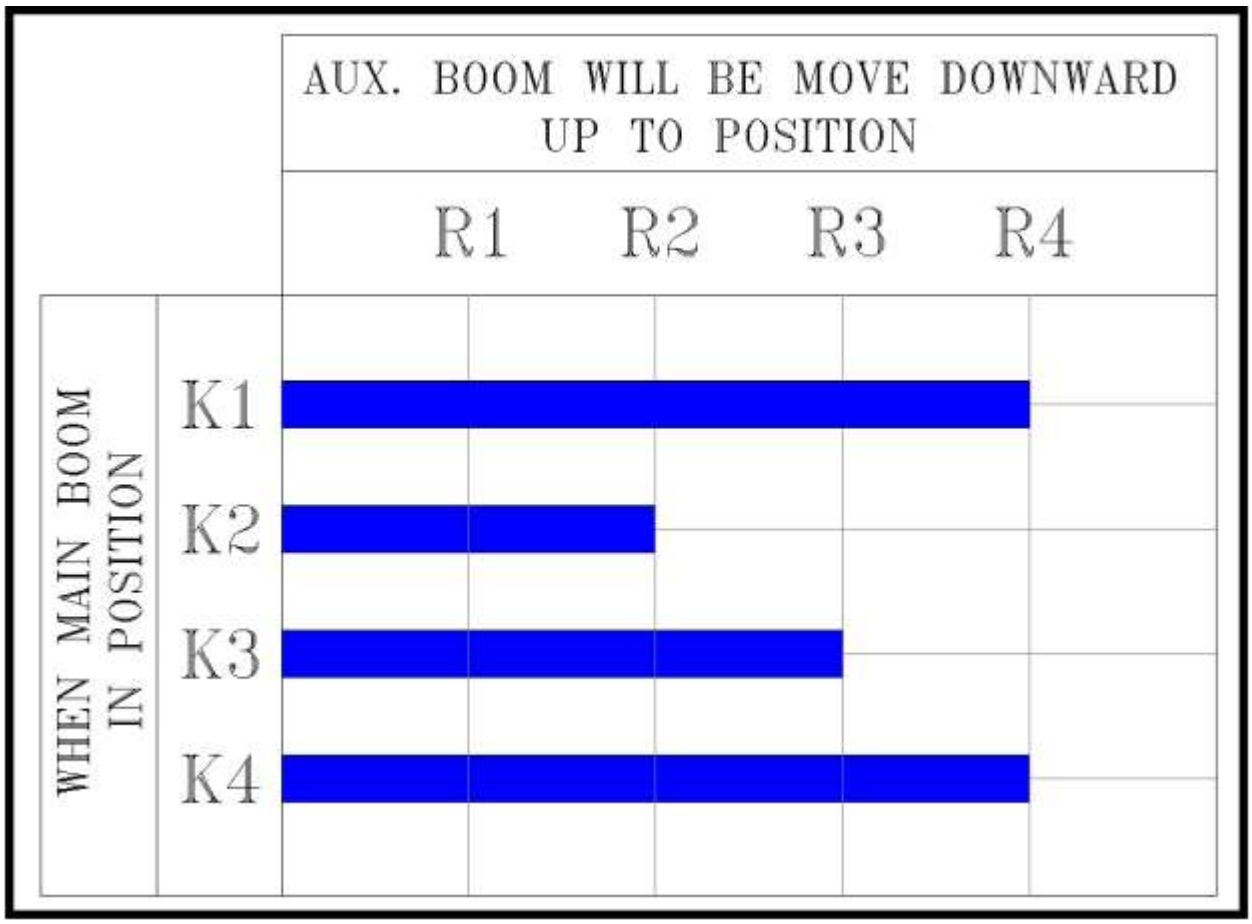

ELECON EPC
ELECON EPC PROJECTS LIMITED

Bar Chart for Upward movements of Scraper booms (Refer Drawing No. T09382/1 Rev.-1)

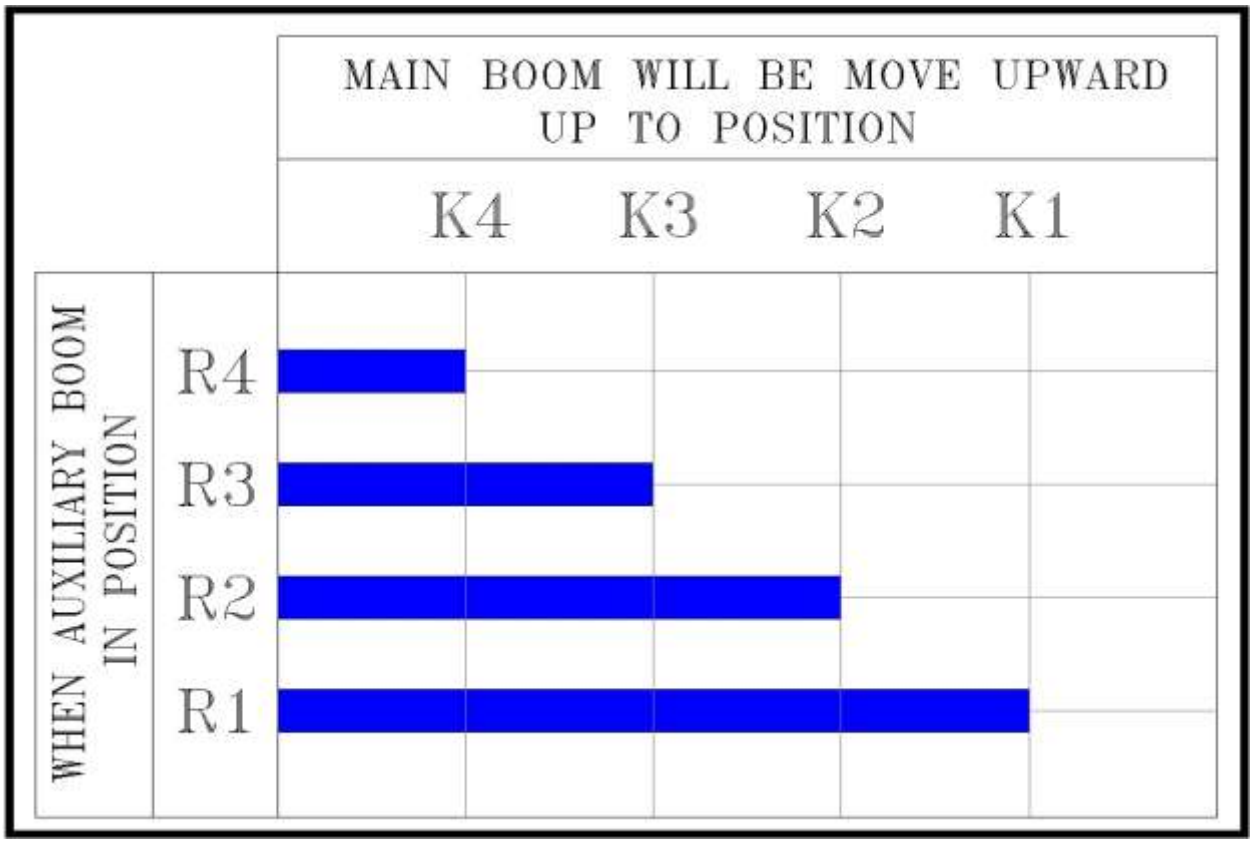

Interlock Matrix for Downward movements of Scraper booms (Refer Drg. No. T09382/1 Rev.-1)

		AUX. BOOM WILL BE MOVE DOWNWARD UP TO POSITION			
		R1	R2	R3	R4
WHEN MAIN BOOM IN POSITION	K1	YES	YES	YES	YES
	K2	YES	YES	NO	NO
	K3	YES	YES	YES	NO
	K4	YES	YES	YES	YES

ELECON EPC PROJECTS LIMITED

Interlock Matrix for Upward movements of Scraper booms (Refer Drawing No. T09382/1 Rev.-1)

		MAIN BOOM WILL BE MOVE UPWARD UP TO POSITION			
		K4	K3	K2	K1
WHEN AUX. BOOM IN POSITION	R4	YES	NO	NO	NO
	R3	YES	YES	NO	NO
	R2	YES	YES	YES	NO
	R1	YES	YES	YES	YES

DRG.NO. T09804/0 ISSUE

DO NOT SCALE

IF IN DOUBT ASK

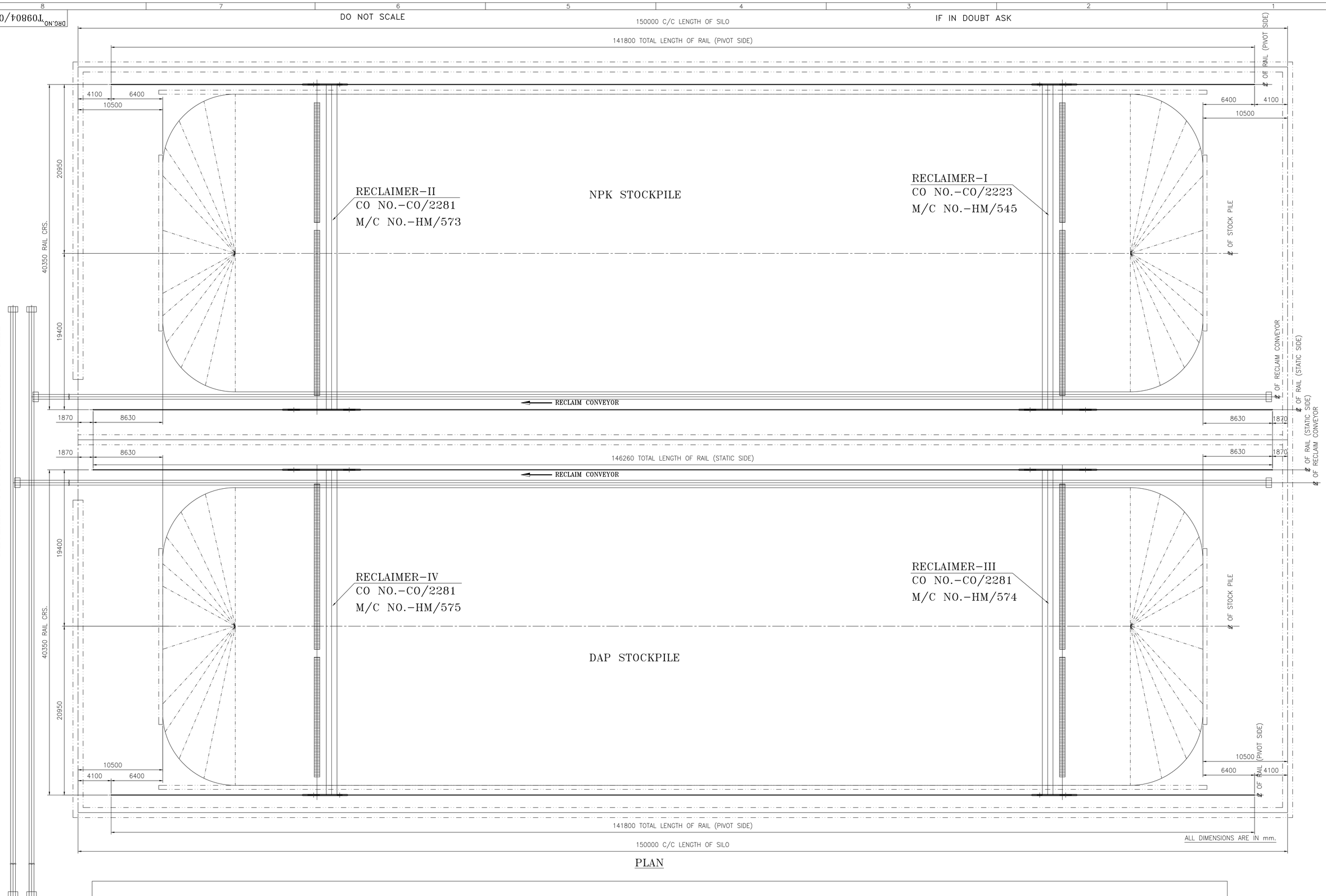

PLAN

BAGGING SHED

ELE.	STRU	MECH	SEC	NAME	DATE	ISSUE	AMENDMENTS	

DRAWN	R. K. Patel	30/06/12
CHECK	R. R. Panchal	03/07/12
APPROVED SEC.		
APPROVED MEC	R. P. Jaria	03/07/12
APPROVED STR.		
APPROVED ELE.		

SCALE : 1:175

LAYOUT OF MACHINE LOCATION/ORIENTATION

THIS DRAWING IS THE PROPERTY OF ELECON ENGINEERING CO. LTD. VALLABH VIDYANAGAR GUJARAT. LOANED TO THE RECIPIENT WHO AGREES THAT IT SHALL NOT BE GIVEN OUT COPIED OR DUPLICATED FOR THE USE OF ANOTHER BUT USED ONLY BY THE RECIPIENT FOR THE PURPOSE OF MAINTAINING THE EQUIPMENT TO WHICH IT REFERS.

MAIN GR. NO.

SUB GR. NO.

ELECON

ORDER NO. CO/2223 CO/2281 M/C NO. ALL

DRG. NO. T09804/0 ISSUE

T09373/0

USER SIZE 985x725

ELECON EPC PROJECTS LIMITED

Do's & Don't FOR TROUBLE FREE OPERATION

Do's

1) Operator shall check the healthiness/parameters including mechanical, electrical and laying position of trailing & control cables before starting the machine.
2) Operator shall check the cleanliness near the rail track at auxiliary and main boom side.
3) The main & auxiliary booms shall be away from material heap during starting and stopping of machine.
4) The height of the main & auxiliary booms shall be ensured before crossing the material heap.
5) Maintaining of log book for clear information.
6) During reclaiming the material, the main and auxiliary booms shall be lowered with minimum speed till touching the Scraper blade with material.
7) Operator should ensure the maximum penetration in to the material/fertilizer up to half of the blade thus the feed rate of material shall be maintained according to requirement of bagging plant (Maximum capacity of machine is rated to 300TPH).
8) The consumption of current (Main Scraper Boom: 70A, Aux. Scraper Boom: 50A) should be observed at frequent intervals during operation of Scraper drive (Main & Auxiliary) motors.
9) The lubrication system should be operated for 2 to 3 minutes once in three shifts.
10) All the doors of MCC, PLC, VVVF drive panels, E-house and Operator cabin shall be closed to avoid moisture entry and overloading of A.C. machines.
11) Operator shall watch the indicators of CCRD & PCRD function during travel operation of machine.
12) Operator shall inform H.O.D/concerned official immediately if any abnormality found during operation.

Don't

1) Reclamation of material/Heap from side shall be avoided as the booms are hanging/suspended and should be performed the reclamation from top of the material heap.
2) Scraper drive units should not start before starting the yard conveyor.

INSTRUMENTATION, OPERATION AND CONTROL:

The machine shall be control from Operator's Cabin for various operation and controls. Remote operation is also possible.

1. Description of Operation

1.1 Operating Modes:
A selector switch with 3 positions has been located on the operating console. The positions are as elaborated below:

1.2 Manual Operation:
When this mode is selected, each drive could be started and stopped in proper interlock and sequence by a push button or control switch on the operating console. All safety devices shall be operative in this mode.

1.3 Automatic Operation:
In this mode by pressing shall start one push button in Operator's cabin all drives of the machine in sequence. The machine can move to and fro and set depths of cut at the end of each travel automatically (without operator's assistance) and reclaim stockpile at the rated capacity. The reclaim capacity could be set from 10% to maximum by initial setting of depth of cut by the Operator. Depth of cut is adjustable, and will be maintained till it is re-adjusted.

1.4 Out of Sequence:
This mode shall be the same as the manual mode with the difference that any drive could be started in any sequence without interlocking.

2. Reclaiming Chain Device:
The Chain device drive shall be started and stopped by push buttons located on the operating console.

2.1 Manual Operation:
The main and auxiliary scraper chain drive shall be started and stopped by the push buttons, provided that the reclaim belt conveyor is running. Provision for necessary interlock is included.

Once the main and auxiliary scraper chain motor is started, should the chain not achieve the rated speed within a prefixed period of time, normally a motor failure switch shall shut-off the chain motor and a light labeled Chain Under-speed shall light up and an alarm horn shall sound. To reset the malfunction, depressing the proper button on local console should reset first alarm horn, and after checking the problem, the chain stop button shall be depressed before depressing the start button again. Should the overload protection of the chain motor trip, the motor shall shut-off and a light on the control desk will indicate which overload is tripped. Each time any malfunction occurs, the same alarm horn shall sound (until silenced) and the indicating light shall light up.

2.2 Automatic Operation:

With the selector switch in Automatic mode, when start push button on the control desk is pressed, the machine shall start in sequence as follows:

a) First a warning horn shall sound for a few seconds and then the chain shall start, followed by the travelling movement, in the same direction as the reclaimer was travelling before stopping.

b) When the machine reaches its preset travel limit, the travelling movement shall stop and the hoist drive shall lower the scraping arm from a preset depth of cut. The depth of cut shall be preset on a timer located on the operating console.

c) When the predetermined depth of cut is achieved, the travel movement shall start again in the opposite direction until it reaches the preset travel limit on the other side, and then the sequence is repeated.

2.3 Out-of-the-Sequence Operation:

When the selector switch is placed in this mode, the main/and auxiliary scraper chain can be started even if the reclaim belt conveyor is not running.

3. Hoisting Device

The hoist device shall be designed with a two-speed motor. High speed shall be used to raise or lower the scrapping arm when changing positioning to a new pile. Slow speed shall be used for depth of cut and arm lowering during reclaims operations. Three steps of lowering depth are introduced in keeping with the Scraper Boom luffing degree to achieve constant rate of reclaim.

3.1 Manual Operation

a) High Speed
Pressing the push button as long as needed in order to position the arm in the required position shall do raising or lowering the scraper arm. Limit and back-up switches limit the upper and lower positions. High speed is operated only in idle conditions.

b) Slow Speed
Raising in slow speed shall have a seal-in contact, therefore, after actuating the button 'Up Slow Speed' the hoist will raise the arm until stopped by push-button or by proper limit switch. Lowering the arm shall be made in two modes; either by pressing the 'Down Slow' buttons until the required position is reached. A selector switch labeled 'Down Free' controlled shall, when on 'Controlled' position, control the lowering by the depth of cut timer, each time that the 'Down Slow' button is actuated.

3.2 Automatic Operation

In automatic operation the high speed shall not be used. Down slow shall be actuated each time that the travelling movement is stopped either by a travel limit switch or by the detection device.

4. Travelling Devices

For travel drive, AC motor with frequency converter shall be provided, for a wide variation of operation travel speed, and to achieve fast idle travel speed.

4.1 Manual Operation

Travelling shall start only after the scraper chain movement is started. Three push buttons shall be provided for the travelling movement. A push button or as soon as chain stops or by back-up travelling and/or skew detection limit switches shall stop the travelling movement. Another way of stopping this movement shall be the pile sensors on each side of the reclaiming arm. Each time the travelling movement is stopped, it should be started manually again.

4.2 Automatic Operation

Travelling shall start right after the scraper chain drive is started (a slight delay is to be manually introduced). The limit switch stops shall be set manually to actuate the travelling limit switches and shall be adjusted from time to time to suit proper use of the portal reclaimer.

4.3 Out of Sequence Operation

Out of sequence operation is much the same as manual operation, only the scraper chain shall not have to run in order to travel.

4.4 High Speed Operation

High speed travelling shall be started and stopped by the same push button as manual travelling. The difference shall be that the arm should be in the upper position before the high speed is engaged.

5. Malfunction

All safety devices shall be tied into the malfunction system together with all overload relays.

Each time a malfunction occurs an audio-visual annunciation shall be exhibited. The fault annunciation system shall be complete with alarm buzzers, sound cancel, acknowledge reset and lamp test push buttons. The annunciation window lamp shall be complete with series resistors of adequate rating. The system shall also be suitable for receiving more than one fault simultaneously or in succession.

OoooooooOOOOOOOOoooooooO

ELECON EPC PROJECTS LIMITED

PREVENTIVE MAINTENANCE INSTRUCTIONS :

GENERAL:

The reliable operation and life of the machine is strongly influenced by the standard of maintenance of the electrical and mechanical equipment.

It is imperative that regular checks are carried out in respect of the lubrication, operating efficiency and wear and to replace damaged or worn parts.

The painting should be subjected to routine checks and where necessary be touched up in an efficient manner.

The frequency of such checks and the associated Maintenance work is dependent on the length of operation and the possible wear on machine parts, wear plates and rubber strips.

Contamination caused by spillage or other accumulations of dirt should be constantly cleaned up. This also applies to the cleaning up of machinery as well as for steel structure, protection devices and walkway.

Rotating machine parts must only be cleaned when they are at a standstill whereby the respective safety and accident prevention regulations must be observed.

Damage to walkway and railings, which for instance, can be caused by falling material, must be repaired immediately or at the very latest during the following repair shift. When temporary repair is made to walkways, stairways or Railings adequate safety precautions must be taken.

Damage to load bearing steel structure, loose rivets, bolts or screws as also the peeling off of paint which point to overstressing, respectively to forceful deformation must be reported immediately to the supervising personnel.

LUBRICATION :

When lubrication or carrying out checks various general guiding rules should be observed. The cleanliness of the grease nipple and nozzles of grease guns or presses is a point to which careful attention should be paid. As far as is possible, gearboxes should only be opened on days when the wind is calm, respectively, under a protective tarpaulin to prevent the entry of flying dust.

Before opening a gearbox the cover and in particular the rabbets should be most carefully cleaned. Foreign material, which has penetrated in to gears or bearing should be wash out with flushing oil. With sliding bearings grease should be passed in until such time as plenty of grease escapes over the circumference of the lubrication point. Sanded–up gears or bearings must under no circumstances be turned.

Old, contaminated and reunified grease oil should be removed from the machine parts. Grease and oil should in the interest of accident prevention be kept away from the walkways and railings.

The electrical equipment, rubber belting, brake drums and brake linings must under no circumstances come into contact with lubricants.

Full details of the maintenance work in respect of lubrication are given in the lubrication chart.

Before taking the machine into operation after operations have been interrupted for a long period all bearings must be re-lubricated until such time as a grease collar builds up on the edges of the bearings. For the position and number of lubrication points as well as the method of lubrication and lubricant to be used, please see the lubrication charts enclosed herewith.

The maintenance of the lubrication system should be carried out In accordance with the instructions of the manufacturer.

SCRAPER MECHANISM :-

Screwed connection especially screwing of scraper blades shall be regularly controlled and newly fastened, if necessary.

Tensioning devices shall be controlled and adjusted in regular intervals.

Chain sprocket and chain shall be controlled monthly with regard to wear and tear.

Scraper chain shall run for a short time, before and after longer times of stand still. Remove eventual fallen material from guiding rails at the scraper boom before it is lifted up from the lowest position.

Before stopping the machine for longer times of interruption of week, the running scraper chain should be sprayed with oil.

BRAKES :

The set brake torque of the double shoe brakes must not be altered free movement of the brake rod system must be guaranteed at all times and must not be impaired by contamination, tools which have carelessly been left lying around or for any other reasons.

With the weight loaded double shoe brakes the brake torque given on the type plate must be reset after repair works or after exchanging the brake linings.

The brake linings & brake drums must under no circumstances come in contact with lubricants. Brake linings, which possibly become contaminated with oil or grease, must be replaced with new linings immediately and the brake drums washed off until they are completely free from grease, respectively oil.

For the brake thruster the instructions are separately furnished.

COUPLINGS :

The operation and maintenance of the Fluid couplings should be carried out in accordance with the instructions given separately.

In case of flexible coupling worn out bushes/pins should be replaced.

GEARBOXES :

The gearboxes are not supplied with the initial oil filling. The operating reliability and life of the gearboxes is dependent on the care exercised when mounting and commissioning them. The selection of the lubrications and careful maintenance of the gearboxes are further points of almost importance.

Attention should be given to the following points:-

MOUNTING AND ALIGNMENT OF THE GEARBOXES :

The gearboxes must always be mounted on sturdy, vibration free foundations. Attention should be given to ensure that the shafts of the driving and driven machinery are exactly aligned. The employment of flexible coupling does not in any way influence the essentiality of this requirement.

Couplings, belt pulleys, chain wheels, gear wheels etc. must be only be drawn on to the gear shaft buts and under no circumstances be hammered on. Appropriate tapped holes are provided in the shaft ends.

LUBRICATION AND MAINTENANCE :

Before commissioning a gearbox it must first be filled with the recommended oil or with an oil of equal quality. Needless to say the gearbox must not be running. The oil can be filled after removal of the inspection hole cover. When filling the gearboxes a fine sieve should be used. With gearboxes having dipsticks oil should be filled up to the level of the highest mark. It is pointless to fill up the gearboxes above the highest foreseen level. The oil level should be checked from time to time when the gears are not mounting. The level must not hereby sink below oil level indicator and for gearboxes with dipsticks not below the lowest mark.

The anti-friction bearings, which are shielded against the inside of the housing, must be slightly re-lubricated every two months with an acidless anti-friction bearing grease. For this purpose grease nipples are provided on the bearing hub.

The initial oil filling by spur and bevel gearboxes should be drained off and replaced with fresh oil as specified in O & M manual for gearbox and for worm gears as specified in O & M manual for gearbox. Further oil changes should be carried out every 8 – 12 months dependent on operating conditions and the number of hours worked daily. After the old oil has been drained off the gearbox should be flushed out thoroughly with gasoline or benzine. Before refilling the gearboxes with fresh oil attention should be given to ensure that flushing fluid and any other possible residue is entirely removed should a gearbox be taken apart cleaning material of a fibrous texture or cotton waste must not be used. When reassembling the gearbox old sealing compound should be removed from the gear until surfaces and bearing covers and renewed.

Bevel gears is precision –set by means of threaded rings or 1/10 mm washers. It must be ensured that the setting is not altered as otherwise the bevel gears will not mesh correctly and damage will result.

Gears designed for only one direction of rotation can only turn in the direction marked by an arrow. The more care taken in maintenance and operation adds to the life of gear boxes.

The removal of the gearbox upper section without our explicit permission releases our company from their guarantee commitments.

In the event of loud running noise and/or excessive heating occurring which point to damage or insufficient lubrication of the gears should be reported immediately to the supervisory personnel.

ELECON EPC PROJECTS LIMITED

SUMMARY OF REGULAR MAINTENANCE WORKS :

(1) Cleaning up of the machine.

(2) Check of scrapers and sealing strips.

(3) Functional test of the limit switches.

(4) Check of lubrication points with regard to adequate greasing.

(5) Oil level check in the gearboxes.

(6) Brake check.

(7) Check of the rails.

(8) Inspection of the travel wheels for wear.

(9) Check of the safety couplings.

(10) Check of the trailing cable.

(11) Check of screws or bolt connections.

ELECON EPC
ELECON EPC PROJECTS LIMITED

INSPECTION CHECK LIST BEFORE OPERATION :

Inspection duty is mostly a matter of very close observation and timely corrective action. The machine once it is properly designed, erected and maintained will normally give smooth and trouble free service. However, a close watch is essential to observe any problems and take remedial action to save the machine from damages and major stoppages. The operator should make a through check of the machine before starting it as summarized below.

(a) Working personnels as well as tools etc. should be cleared from rail and belt.

(b) Ensure the electric supply. Check all drive motors for correct sense of rotation and main voltage (if required change connections).

(c) Check and ensure that all the bogies and rollers are free to rotate. (Correct if required).

(d) Check gearboxes, fluid coupling and thrustors for oil level and refill them if required,

(e) Check all bolted joints, which connects mechanical parts with the steel structure, motor, gearboxes, brakes, coupling, thrustors, blades and similar part.

(f) Prior to commissioning, lubricate all lubricating points of the machine.

(g) Check the emergency switches and release them if applied and also check the sequence switches.

(h) See that all the guards in the drive are in position.

(i) Give sufficient warning signals before starting the machine.

(j) Start the machine and watch carefully for few minutes.

(k) Immediately after starting the machine, test the sequence and emergency by actual application.

(l) Check whether all the manual lubrication points are properly lubricated.

(m) Clean the walkways and other places.

(n) Check the fluid coupling for leakage.

ELECON EPC PROJECTS LIMITED

TIGHTENING TORQUES

Tightening torque for HT bolts IS:1364 or DIN:931 Class 8.8

Sr. No.	Bolt Size	Tightening torque (Nm)
1	M6	10.3
2	M8	25.0
3	M10	50.0
4	M12	87.0
5	M16	214.0
6	M20	431.0
7	M24	745.0
8	M30	1480.0
9	M36	2586.0
10	M42	4135.0
11	M45	5040.0

Tightening torque for HSFG bolts IS:3757 or DIN:6914

Sr. No.	Bolt Size	Tightening torque (Nm)		Necessary pre-tensioning force in the bolt (KN)
		Bolt coated with molykote	Lightly oiled bolts	
1	M12	100	120	50
2	M16	250	350	100
3	M20	450	600	160
4	M22	650	900	190
5	M24	800	1100	220
6	M27	1250	1650	290
7	M30	1650	2200	350
8	M36	2800	3800	510

ELECON EPC PROJECTS LIMITED

CHECK LIST FOR M/C OPERATOR AND SUPERVISOR:

1. As soon as machine stops for maintenance or repair, switch off electric supply and put “man on line” board or lock it.
2. Check all the scrapers for their proper functioning.
3. Check all the guards and ensure that they are in position and fixed properly.
4. Check all the rotating parts for their free rotation. Remove the soil accumulation below them.
5. Check the wear of brake liners and brake drums.
6. Remove the damaged rotating parts and replace them whenever necessary.
7. Check the grease/oil level in lubrication tank.
8. Check all the bearings for excessive heating and abnormal sound at regular intervals.
9. Check up gearboxes, motor, thrustors and brakes for any faults.
10. Check the take up tensioning device for its free movement.
11. Check the scraper blades fixing bolts & tighten them, if required missing bolts should be provided immediately.
12. Check emergency switches for their proper functioning.
13. Clean all the chutes and skirt plates to avoid soil building.
14. Check the sequence control.
15. Check wire rope for any damages.

ELECON EPC PROJECTS LIMITED

INSPECTION CHECK LIST DURING OPERATION :

Once the machine is started and has achieved its normal running, it will work for smooth and trouble free operation. However, to ensure safety of personnel and equipment, the following points should be strictly observed.

1. Feel the temperature of gearboxes, motor, bearings Etc. by touching the same. If the temperature is above normal, immediate check should be done.
2. Check and ensure that all the thrustors are lifted and brakes are released fully.
3. Inspect the scraper blades for proper functioning.
4. Check the wind speed and if wind speed exceeds beyond the permissible limit, stop the machine and clamp it.
5. Check whether lubrication systems are working properly and also check whether sufficient grease/oil is reaching to each lubrication point.
6. Check whether the cable reeling drums is properly winding and unwinding.
7. Check unusual vibration and noise from fluid coupling.
8. Check the vibration of all drives.

ELECON EPC PROJECTS LIMITED

SAFETY INSTRUCTIONS AND FIRE PROTECTION :-

1. It is essential that operation and maintenance personnel should work according to regulation as per Safety Regulations.
2. Never touch any moving part when the machine is in operation.
3. Never apply bare hand anywhere.
4. Never open the dipstick while gearbox is working.
5. Do not adjust the brakes, thrust setting etc. during operation.
6. Never adjust scraper blades when machine is in operation.
7. No one should lean over chutes or hopper for inspection in running system.
8. Do not remove any damaged part when machine is in operation.

FIRE PROTECTION RULES :

1. Required cutting and welding work to be executed most cautiously. Prior to commencement of these works the hand fire extinguishers easily accessible must be at disposal.
2. During current supervision of the electrical and mechanical installations of the machine it has to be paid attention to that faults that may cause fire (short-circuit, scorching, annealing, sparks, bearing overheating) are recognized in time and remedied.
3. Hazardous, easily inflammable materials (oil, grease, cotton waste and similar) are to be stored possibly fireproof.
4. Near the place susceptible to fire ignition suitable portable hand fire extinguishers have to be provided in a sufficient number.
5. The hand fire extinguishers have to be checked cycle-wise for their real readiness to be used by the machine attendant. Date and result of this inspection have to be registered in a fire protection control manual.

Beyond this, every four months all fire-extinguishing devices have to be checked for their completeness and usability and incase of need to be replaced by installations ready for use.

ABNORMAL AND EMERGENCY OPERATION :

Under certain conditions due to unavoidable circumstances, the operation of the machine becomes abnormal and the Machine has to be switched off immediately. Under following circumstances, emergency measure should be taken.

1. In Case Of Fire :

   If the machine catches fire due to certain reasons like short-circuit, scorching, sparks or bearing overheating etc. the machine should be immediately switched off and should be brought to the end of the stockpile and immediate remedial action should be taken. For this sufficient number of fire extinguisher should be provided on the machine. If the stockpile catches fire, take out the machine out of the fire zone.

2. At the time of any accident like death of a man etc. during operation of machine, the machine must be stopped immediately.

3. In cases of danger within the machine itself like sudden breaking/ failure of certain important part.

   E.g. – Sudden breakage of wheel axle.
   Failure of gearbox, fluid coupling etc. or any bend in the structural construction, the machine must be stopped by actuation of emergency switch. For maintenance and repair work, take the machine to the maintenance bay or at the end of the stockpile.

4. In case of chute blocking stop the machine at once otherwise other parts of the machine will be damaged.

5. In case of irregular noises from bearings, gearboxes, couplings etc. immediately switch off the drive unit.

ELECON EPC
ELECON EPC PROJECTS LIMITED

DISMANTLING PROCEDURE FOR SOME IMPORTANT MECHANICAL COMPONENTS

REPAIR AND DISMANTLING INSTRUCTIONS

In the following paragraph the most important repair and dismantling work is described which influences the stability of the machine and as such they require special attention.

Following are the major points, which requires special attention.

(a) Dismantling/repair work shall be carried out only when machine is free from useful load and incrustation i.e. machine shall be cleaned.

(b) Repair work of removed component shall be carried out as per the instruction of the individual manufacturers and/or detail drawing.

(c) Dismantling / repair work shall be executed under expert personnel.

(d) Only one dismantling / repair / erection process shall be carried out at a time.

(e) Welding sequence shall be followed such that the distortion is avoided.

(f) During welding care shall be taken so that the members are not over heated.

(g) No artificial cooling of members are permitted.

(h) No gas cutting / welding is permitted under loaded condition of members.

(i) During modification / repair / erection work neither luffing nor traveling action shall be carried out.

(j) During modification / repair / erection work all travel wheels shall be locked for non-movement.

(k) Loose support shall mean, non-sinking support provided with tight packing no welding shall be carried out between support and member.

(l) Check the bogie for its free movement at regular interval.

ELECON EPC PROJECTS LIMITED

SECTION – II

INSTALLATION, OPERATION & MAINTENANCE INSTRUCTIONS FOR IMPORTANT COMPONENTS

ELECON EPC
ELECON EPC PROJECTS LIMITED

I N D E X

S E C T I O N -II

OINSTALLATION, OPERATION & MAINTENANCE INSTRUCTION FOR IMPORTANT COMPONENTS

SR.NO.	DESCRIPTION	PAGE NO
1	BEVEL HELICAL GEARBOX	1
2	COUPLING	10
3	THRUSTOR OPERATED JAW BRAKE	17
4	ELECTRO HYDRAULIC THRUSTOR	26
5	SHRINK DISC	29
6	SCRAPER CHAIN	34
7	ELECTRIC HOIST	38
8	CABLE REELING DRUM	43
9	DE LUMPER	45
10	LUBRICATION SYSTEM	47
11	LUBRICATION SCHEDULE	55

ELECON EPC PROJECTS LIMITED

GEAR BOX

ELECON EPC PROJECTS LIMITED

GEAR BOXES

1) TRAVEL DRIVE

Bevel Helical Reduction Hollow Shaft Gear Unit

Type & Size	**: PWD - 18 with shrink disc**
Ratio	**: 125 : 1**
Rotation	**: Reversible**
Handing	**: 1 No. R.H. + 1 No. L.H.**
Make	**: Elecon**
Drg.No.	**: 516-00-3425 & 516-00-3426**

2) SCRAPER CHAIN DRIVE (MAIN BOOM)

Bevel Helical Reduction Solid Shaft Gear Unit

Type & Size	**: KCH - 315 with shrink disc**
Ratio	**: 71 : 1**
Rotation	**: Reversible**
Handing	**: R.H.**
Make	**: Elecon**
Drg.No.	**: 8052003**

ELECON EPC PROJECTS LIMITED

3) SCRAPER CHAIN DRIVE (AUXILIARY BOOM)

Bevel Helical Reduction Hollow Shaft Gear Unit

Type & Size	**: KCH - 200 with shrink disc**
Ratio	**: 28 : 1**
Rotation	**: Reversible**
Handing	**: L.H.**
Make	**: Elecon**
Drg.No.	**: 8052004**

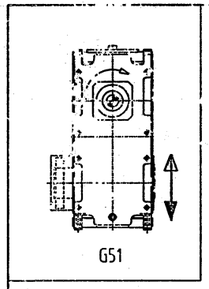

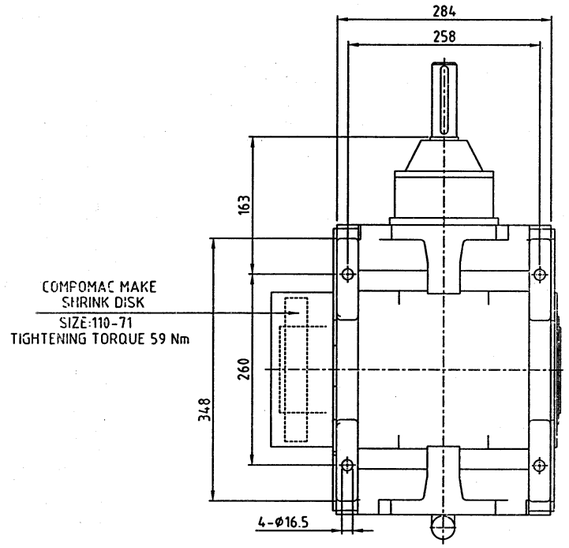

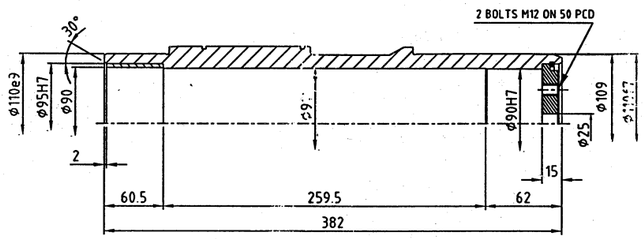

INSIDE DESIGN OF HOLLOW -SHAFT

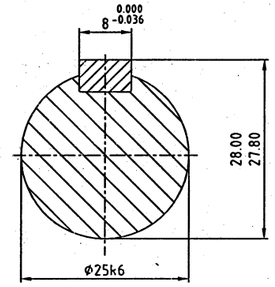

INPUT KEYWAY DETAIL

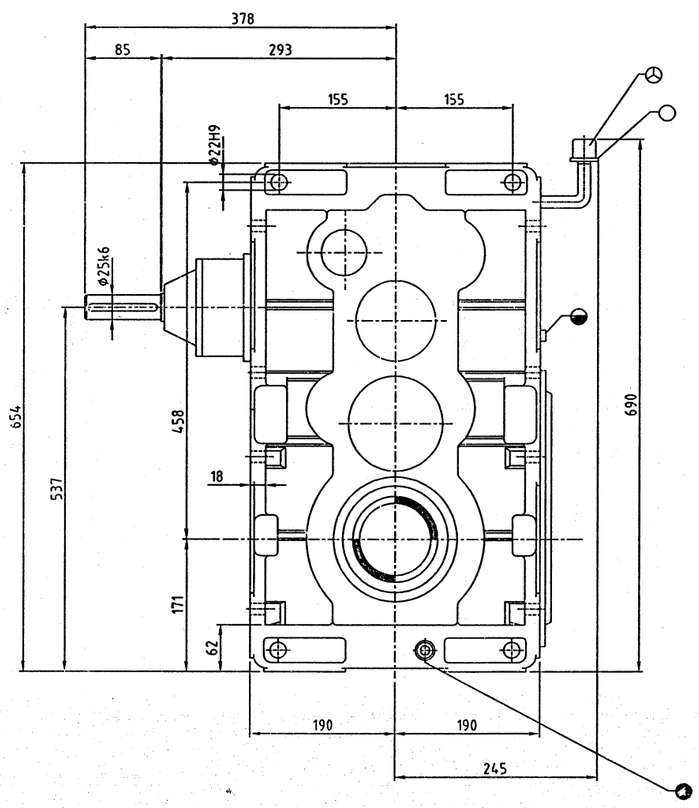

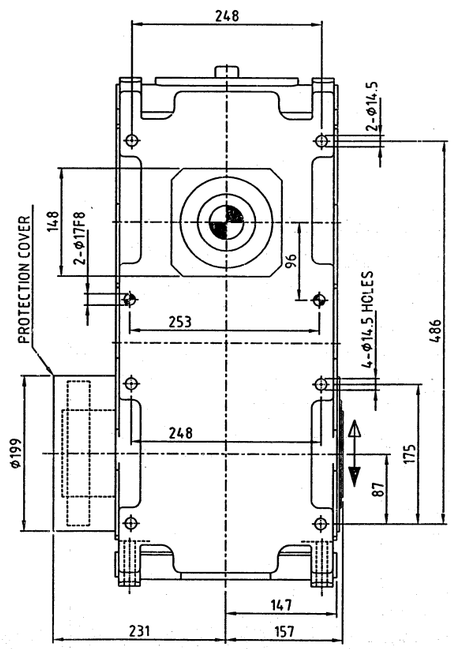

Approved.
4/5/12
(B.K. Raul)
(S K Jha)
04/05/12

ORDER DETAILS		
CLIENT - M/s. IFFCO		
CLIENT P.O. :-		
PROJECT : D-415/Proj/EG-8949		
ELECON ENGG. CO LTD. WORKS ORDER NO. :CO/2223		
TECHNICAL DETAIL		
APPLICATION :		TRAVEL DRIVE
EQUIPMENT	Ⓐ	FULL PORTAL TYPE SCRAPER RECLAIMER
EQUIPMENT NO.:-		HM/545
GEAR BOX TYPE		PWD
SIZE		18
DOR OF OUTPUT SHAFT LOOKING TOWARDS ITS END		REVERSIBLE / R.H.
POWER	MOTOR	5.5 kw.
	CONSUMED	3.89 kw.
INPUT SPEED	n_1	1500 rpm
OUTPUT SPEED	n_2	11.5385 rpm
RATIO	NOMINAL	125 :1
	ACTUAL	130:1
OIL TYPE		SERVOMESH SP 320 OR EQUI.
OIL QUANTITY Approx		30 ltr.
OIL VISCOSITY		169 AT 50°C
WT. OF GEAR BOX WITHOUT OIL Approx		245 Kg.
GD^2 VALUE (Relative to Input Shaft)		0.007604 kgm2
EFFICIENCY OF GEAR BOX		97%
NOMINAL POWER RATING:-		11 kW.
GEAR CASE MATERIAL:-		C.I FG-260, IS:210
ORDER QUANTITY		1 NOS
NOTE:-		
SHAFT CENTERING AS PER DIN 332 FORM DS.		
KEYS & KEYWAY AS PER DIN6885 PART I		
SHAFT END KEYS ARE IN ELECON SCOPE OF SUPPLY.		

Filling plug
Oil level
Oil drain
Breather plug

LUBRICATION TYPE	SPLASH LUBRICATION
MECHANICAL RATING	11 KW
THERMAL RATING	14.36 KW @ 50°
SERVICE FACTOR	2.00

Rev.	No. of Rev.	Name	Ammendments	Date
A	1	DNP	MKD. Ⓐ ADDED AS PER CLIENT COMMENT.	13.04.12

Type of Gear unit
PWD-18

AllowableTolerance ISO 2768-mK
Tolerance acc. to ISO 8015

Scale: N.T.S. Weight: -kg.
Material: -
Order No : -

-0.3 +0.4
Edges are according to ISO 13715

	Name	Date
Drawn	DNP	04.04.12
Checked	RNN	04.04.12
Approved	NGP	04.04.12

Title
DIMENTION SHEET FOR
PWD-18-S50-G51-R125-Z0

CD : - Ratio:

Surface DIN ISO 1302

ELECON

Drawing-No. 516-00-3425 Rev. A Sheet - of -

Modified from: 516-00-3396 Superseded from: -

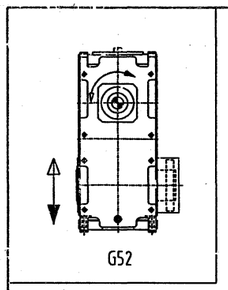

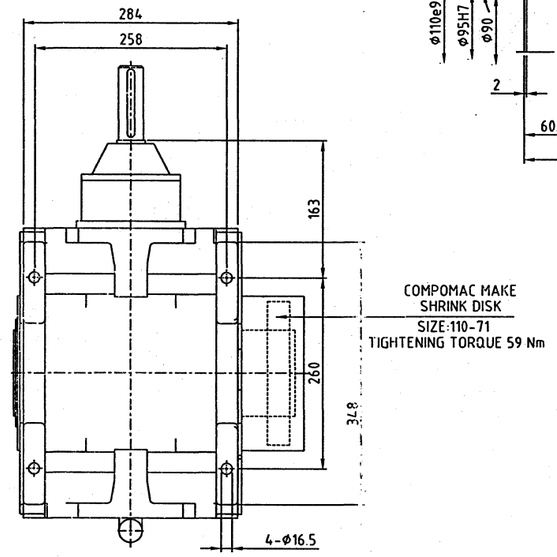

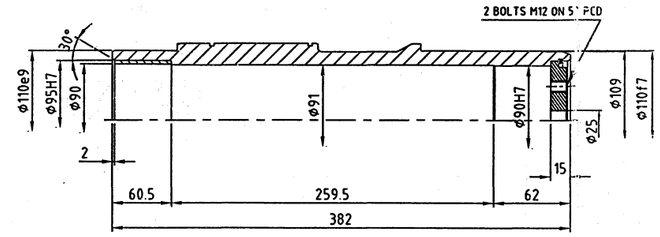

INSIDE DESIGN OF HOLLOW -SHAFT

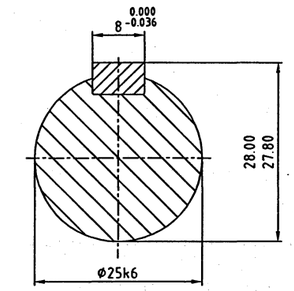

INPUT KEYWAY DETAIL

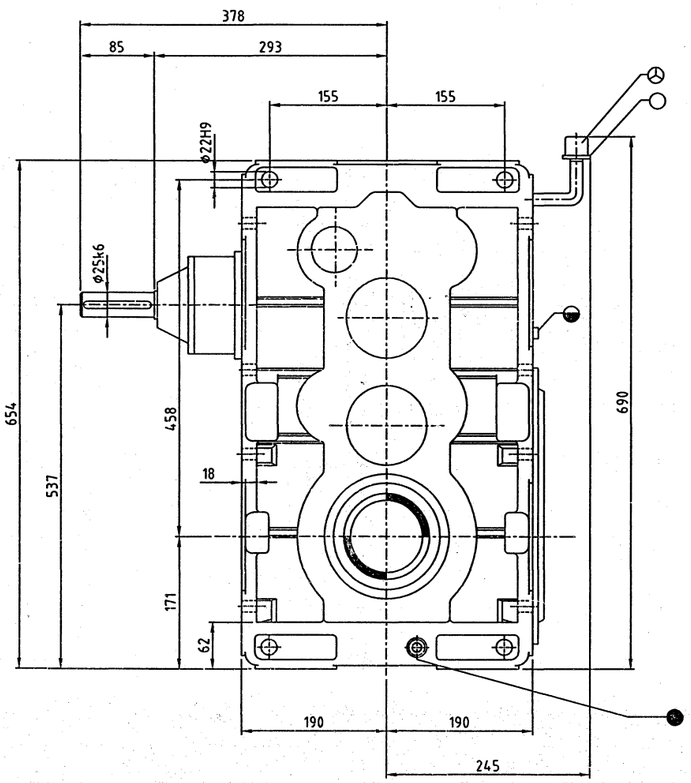

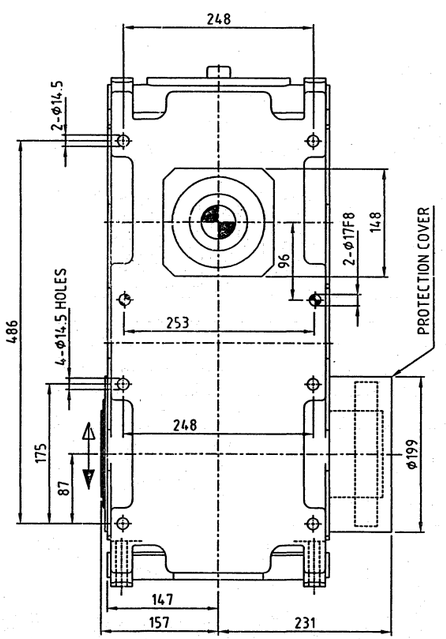

Approved
4/5/12
(B.K. Raul)
(SKJha)
04/05/12

ORDER DETAILS		
CLIENT - M/s. IFFCO		
CLIENT P.O. :-		
PROJECT : D-415/Proj/EG-8949		
ELECON ENGG. CO. LTD. WORKS ORDER NO. : CO/2223		
TECHNICAL DETAIL		
APPLICATION :		TRAVEL DRIVE
EQUIPMENT	Ⓐ	FULL PORTAL TYPE SCRAPER RECLAIMER
EQUIPMENT NO.:-		HM/545
GEAR BOX TYPE		PWD
SIZE		18
DOR OF OUTPUT SHAFT LOOKING TOWARDS ITS END		REVERSIBLE / L.H.
POWER	MOTOR	5.5 kw.
	CONSUMED	3.89 kw.
INPUT SPEED	n_1	1500 rpm
OUTPUT SPEED	n_2	11.5385 rpm
RATIO	NOMINAL	125 :1
	ACTUAL	130:1
OIL TYPE		SERVOMESH SP 320 OR EQUI.
OIL QUANTITY Approx		30 ltr.
OIL VISCOSITY		169 AT 50°C
WT. OF GEAR BOX WITHOUT OIL Approx		245 Kg.
GD^2 VALUE (Relative to Input Shaft)		0.013968 kgm2
EFFICIENCY OF GEAR BOX		97%
NOMINAL POWER RATING:-		11 kW.
GEAR CASE MATERIAL:-		C.I FG-260, IS:210
ORDER QUANTITY		1 NOS
NOTE:-		
SHAFT CENTERING AS PER DIN 332 FORM DS.		
KEYS & KEYWAY AS PER DIN6885 PART I		
SHAFT END KEYS ARE IN ELECON SCOPE OF SUPPLY.		

LUBRICATION TYPE	SPLASH LUBRICATION
MECHANICAL RATING	11 KW
THERMAL RATING	14.36 KW @ 50°
SERVICE FACTOR	2.00

○ Filling plug
◒ Oil level
● Oil drain
Breather plug

Rev.	No. of Rev.	Name	Ammendments	Date
A	1	DNP	MKD. Ⓐ ADDED AS PER CLIENT COMMENT.	13.04.12

Type of Gear unit
PWD-18

AllowableTolerance ISO 2768-mK
Tolerance acc. to ISO 8015

Scale: N.T.S. Weight: -kg.
Material: -
Order No : -

-0.3 +0.4
Edges are according to ISO 13715

	Name	Date
Drawn	DNP	04.04.12
Checked	RNN	04.04.12
Approved	NGP	04.04.12

Title
DIMENTION SHEET FOR
PWD-18-S50-G52-R125-Z0

CD : - Ratio:

(✓)
Surface DIN ISO 1302

ELECON

Drawing-No. 516-00-3426 Rev. A Sheet - of -

Modified from: 516-00-3425 Superseded from: -

HELICAL AND SPIRAL-BEVEL GEAR UNITS

Helical and Spiral-bevel Gear Units (ET Series and EP-Series)

INSTALLATION OPERATION AND MAINTANANCE MANUAL

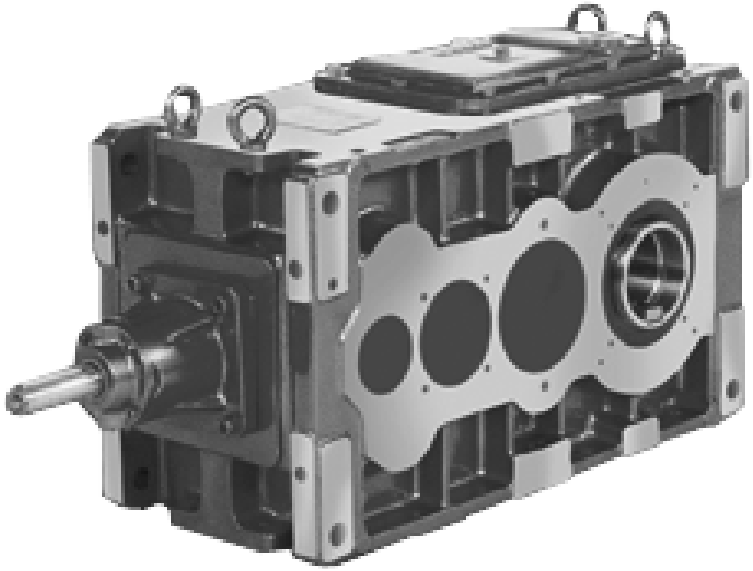

ELECON

Always a step ahead in technology

INSTALLATION, OPERATION & MAINTENANCE MANUAL

1. GENERAL :

* The proper working of a Gear unit depends upon good design, appropriate material, good workmanship and proper installation, appropriate lubrication & working condition.

* Proper working at site will depend upon installation & working condition and these are totally described in this manual. This manual should be kept with the person incharge who handles the installation & operation. He should thoroughly study and understand the instructions given in this manual. Precisely following of this manual will give trouble free working of the Gear unit.

2. SAFETY INSTRUCTIONS :

* The Gear unit is supplied after proper assembly & testing, duly painted and packed as per the contractual conditions. As such, in no case the Gear box to be opened by the unauthorized person during its warrantee period.
* The Gear box may be opened with the agreed order condition.
* Rules & regulations to be followed for industrial safety during use of the Gear unit.
* Gear box to be opened, serviced and repaired only by the trained personnel.
* Any work to be done on the Gear box at stand-still condition, i.e. after switch off the motor or drive.
* Driving system such as coupling, V-belt, sprockets etc are caused with guard to prevent an accident.
* Note affixed on Gear unit such as Name plate, arrows must be kept unpainted visible.

3. HANDLING & STORAGE :

i. Delivery Conditions : All the Gear boxes are dispatched with list of components packed in the box. This should be checked on receipt as per Packing-list and missing of any part to be reported immediately.

ii. The Gear units are supplied without oil filling. Recommended oil has to be filled up before commissioning the unit. Wherever grease lubrication points are provided, the grease filling is done from our works.

iii. The instruments like pressure gauges, temperature gauges etc are dispatched loose pack, shall be well protected in store.

iv. During handling care to be taken that packing box & Gear unit to be lifted as per the symbols shown below :-

* The packing of gear unit will differ, dependent on method of shipment and size. The packing, unless otherwise agreed contractually, complies with Packing guidelines.

* The symbols shown on the packing should be noted. Their significance is as follows.

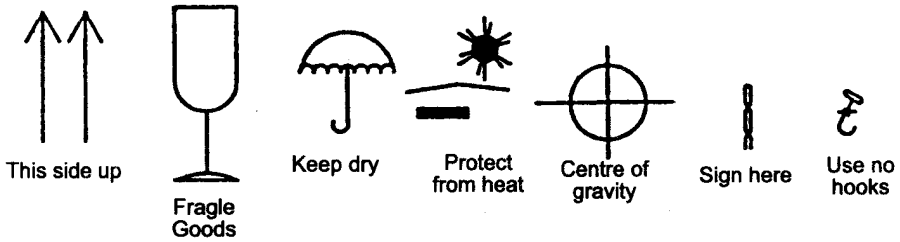

! The Symbol draws attention to safety measure which MUST be observed to prevent damage and the personal injury.

CAUTION :

* When handling the Gear unit special care has to be taken to avoid damage due to careless loading & unloading.
* Gear unit may only be lifted using 4-lifting eyes on the Gear box and shall be lifted with hook & chain/rope. as per Fig. No.1

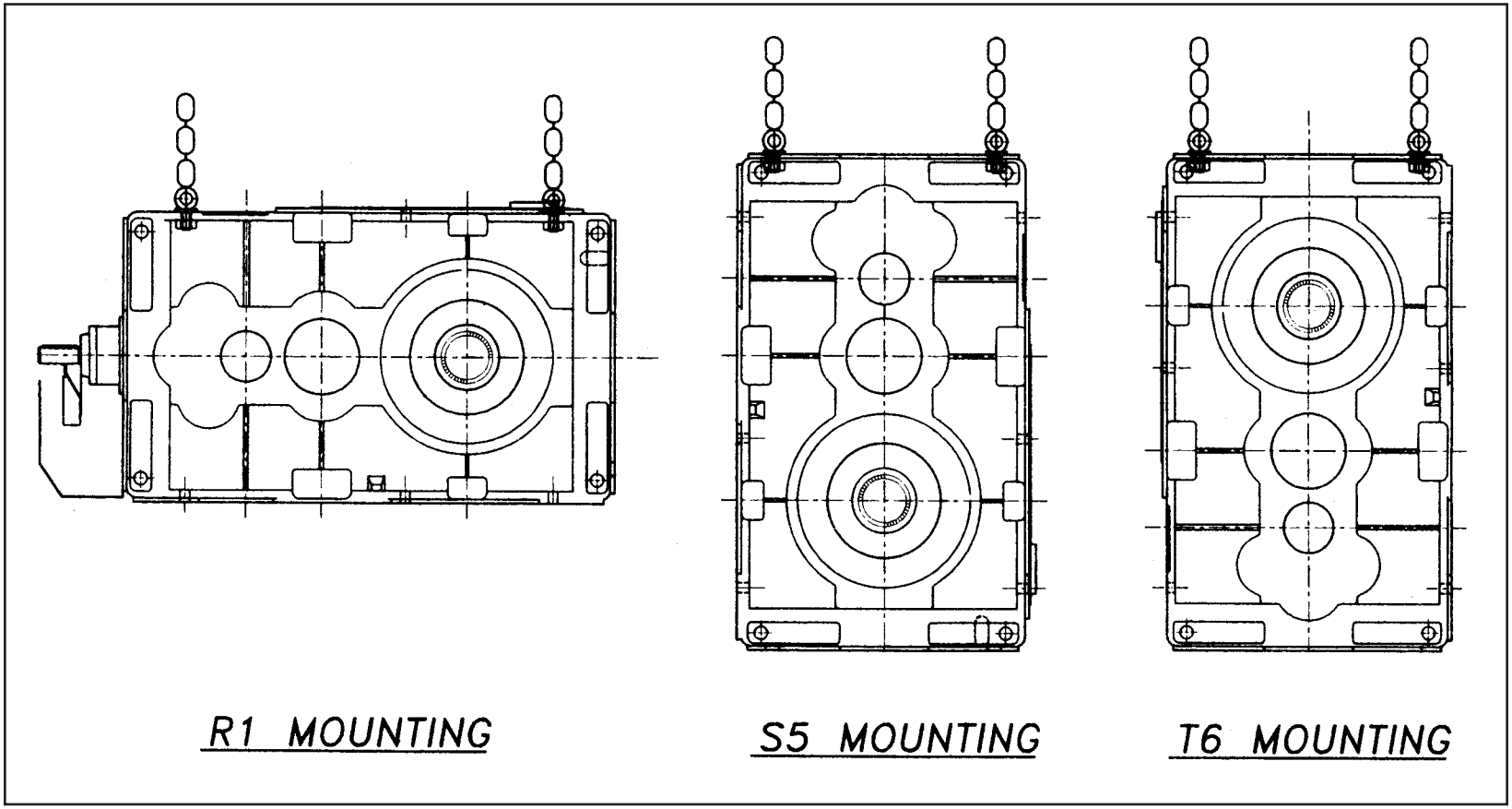

Fig. 1

3.1 STORAGE :

The gear unit should be stored in a protected place in its position of use on a horizontal wooden support and covered the gear unit is provided with internal preservation and the shaft end with a protective coating.

CAUTION :

If stored in the open , the gear unit should be covered with special care and it should be ensured that neither moisture nor foreign matter are allowed to collect on the gear unit.

1. On receipt of Gear unit it should be stored in a safe place (Store) where it is protected from heat, rain, chemicals and to be covered with plastic.
2. Gear unit is not permitted to stack one over another.

3.2 INSTRUCTIONS FOR LONG STORAGE OF GEAR UNITS :

Following instructions for the long time storage of the Gear units is of extreme importance on violation of which can lead to the premature failure :-

Long time storage of a Gear unit can be due to :

* Unit is not in action, however, installed in the place

  or

* Unit is kept in store and waiting for its use.

1. THE UNIT IS INSTALLED; BUT NOT IN ACTION :

When the Gear unit is installed in the system but is out of action, a quantity of oil must be added to exceed maximum level by 30 mm to 50 mm.

Special attention should be given to the condition of the oil. Old oil which may form a deposit or be acidic should be removed. The gears should be turned slowly by hand at intervals, in order to ensure the oil is distributed over all parts in contact. Wherever grease nipples are provided, add grease through grease nipples.

2. THE GEAR BOX IS TO BE STORED FOR A LONG TIME :

When the gear box is to be stored for a long time, the unit should be run for 5 minutes after filling with a rust protective; say HP RUSTOP-388. The level of the oil should be about 30 mm to 50 mm higher than the normal oil level.

All the parts having been thoroughly coated with oil, the protective fluid can be drained and kept for other similar operations. The inspection covers and the Breather plugs should be completely sealed. On starting up the Gear Box reducer, no special precaution need to be taken other than filling the oil bath according to the recommended quantity and quality of lubricant oil.

To prevent corrosion during storage, Silica Gel bags should be kept in the vicinity of Gear unit, **NOT INSIDE GEAR CASE,** Silica Gel should be periodically checked for moisture absorption and be changed from time to time.

4. TECHNICAL DATA :

* General Technical Data : All the Gear units are having the Name plates. All the important data is punched on the name plate as per order requirements. The Gear unit to be used as per the technical data provided on the name plate.

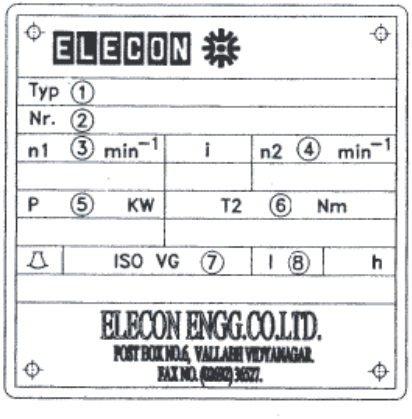

① TYPE/SIZE *)
② ORDER NO. - UNIT FOR MANUFACTURING
③ SPEED n1
④ SPEED n2
⑤ POWER RATING P IN kW
⑥ OUTPUT TORQUE
⑦ OIL VISCOSITY IN VG GLASS
⑧ QUANTITY OF OIL FOR MAIN HOUSING IN LITERS

4.1 DETAIL OF GEAR BOX

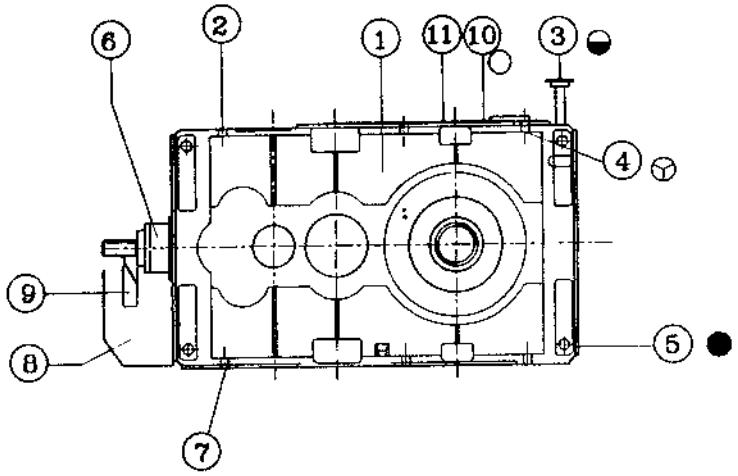

1 - Housing

2 - Lifting eyes.

◒ 3 - Oil dipstick

Ⓨ 4 - Housing vent and breather

● 5 - Oil drain plug

6 - Cover or bearing journal

7 - Gear unit fastening

8 - Fan cowl

9 - Fan

○ 10 - Oil filing plug

11 - Inspection and assembly cover

5 GENERAL DESCRIPTION OF GEAR UNITS :

Type and Position of Gears

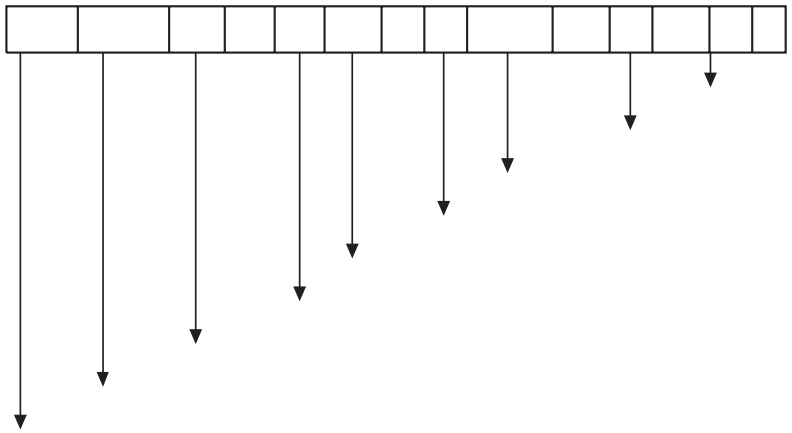

6 GENERAL DESCRIPTION :

The gear unit is supplied as two three or four stage helical gear unit or bevel helical gear unit. Various mounting positions are illustrated as bellow:

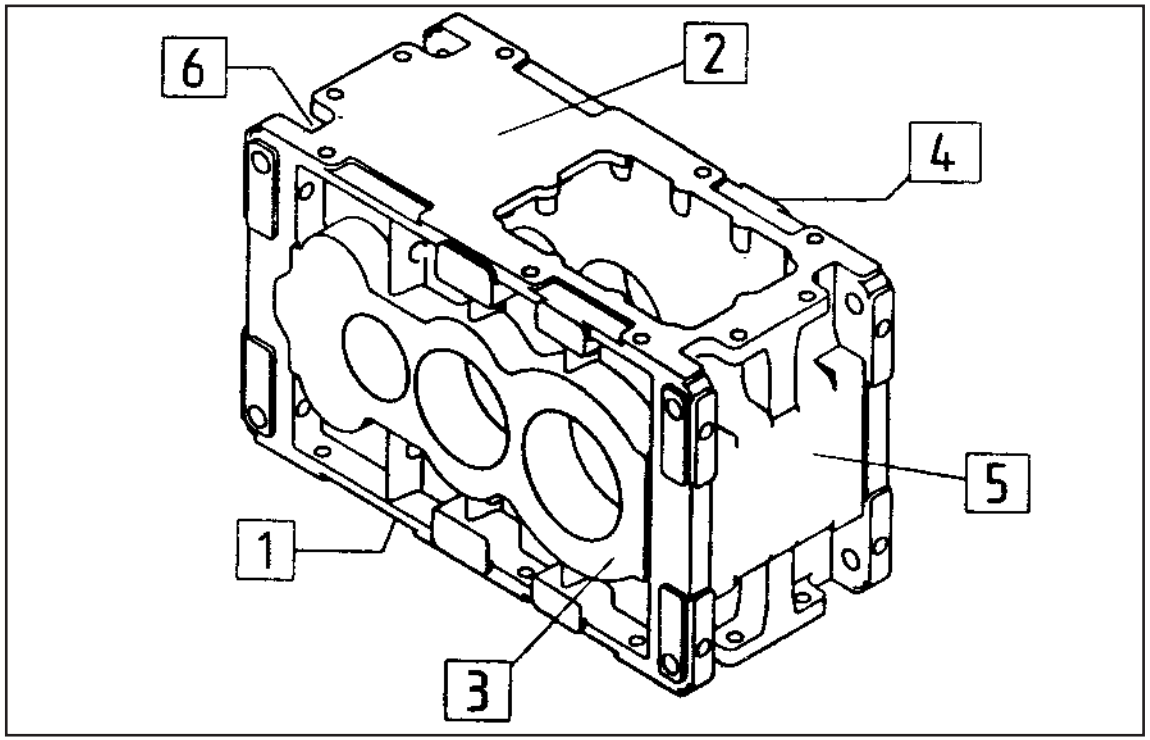

MOUNTING SIDE OF GEAR CASE (AS PER CAT.)

7 POSITION OF GEAR UNIT :

HELICAL GEAR UNITS

PB ..... Single stage PC ..... stage
PD ..... stage PE ..... stag

PB-R1 ..... PE-R1
PC-S5 ..... PE-S5
PC-T6 ..... PE-T6

BEVEL-HELICAL GEAR UNITS

PLB ..... 2 stage
PLC ..... 3 stage PLD ..... 4 stage

PLB-R1 ..... PLD-R1
PLC-S5 ..... PLD-S5
PLC-T5 ..... PLD-T5
PLC-U3 ..... PLD-U3

COMPACT DRIVE (BEVEL-HELICAL)

PWC ..... 3 stage PWD ..... 4 stage

PWC-R1 ..... PWD-R1
PWC-S5 ..... PWD-S5
PWC-T6 ..... PWD-T6
PWC-U4 ..... PWD-U4

POSITION OF GEAR UNIT **POSITION OF GEAR UNIT**

.....R1 .....-S5 .....-T6 .....-U3/U4

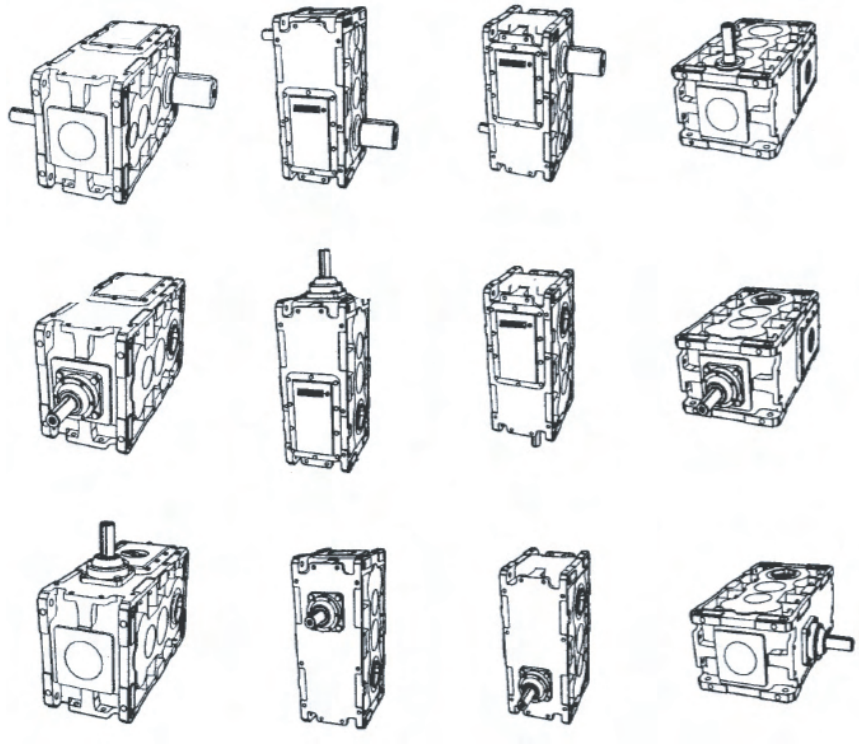

8 HOUSING

* Single piece casing for size 10 to 31
* Single piece casing; gear rigidity, minimum volume, high, thrust load, as there is no parting line.
* Built in space for large roller bearing
* Easy to assemble and take apart
* Design in accordance with the latest trends of acoustics.
* Material - Gray cast iron casting
* Nodular cast iron and welded casing on request.
* Split casing from size 35 onward.
* The housing is provided with generously dimensioned lifting eyes, inspection and installation covers.
* A dipstick for oil level checking, a drain plug for oil changes, Breather plug for brothering.

9 GEAR INTERNALS :

The toothed gear components are case-hardened & ground and spiral bevel gears are hard cut. The noise level of the gear units, is minimized by virtue of the high quality system and ensure reliable running.

10 LUBRICATION

The meshing to gear teeth are adequately supplied with oil for horizontal position of installation by splash lubrication. It ensures that the gear units are maintenance-free.

11 BEARING

All bearings are of anti-friction bearings.
Lubrication of the anti friction bearings is effected for horizontal position of installation by splash lubrication.

12 COOLING

According to requirements , the gear unit is fitted with a fan, a cooling coil, or an oil cooler for cooling purposes.

12.1 FAN

The fan is mounted on the high-speed shaft of the gear unit and protected by a fan cowl. The fan draws air through the protective grille of the fan cowl and causes it to flow through its lateral air ducts along the gear unit housing, thus dissipating a certain amount of the housing heat.

CAUTION :

In the case of gear units which are fitted with a fan adequate clearance for the cooling are in the form of intake cross-section must be provided when fitting the guard for the coupling.

12.2 COOLING COIL

The cooling coil is located in the oil sump of the gear unit and is provided with cooling water connection nipples outside the gear from which water supply pipe to be connected, water pressure should not exceed 8 bars. Water, seawater can be used as cooling water. When flowing through the cooling coil, a certain quantity of heat is extracted from the gear unit oil and transferred to the cooling water.

12.3 WATER-OIL COOLER

The water-oil cooler is installed in the discharge line of the oil cooling system when provided. The water oil cooler dissipates a certain quantity of heat from the gear oil to the cooling water flowing through the cooler housing. A suitable cooling water supply should be provided by the users.

13 BACKSTOP

When the Gear box is fitted with a mechanical backstop. During operation this only permits rotation in the specified direction of rotation. This direction is marked on the gear unit input drive side by a corresponding direction of rotation arrow.

CAUTION :

Before connecting the Gear box Input to driven machine, the Gear box should be checked for correct rotation.

14 SPLASH LUBRICATION SYSTEM WITH EXPANSION TANK

This tank is fitted when the gear box is to be installed in U3/ U4 mounting,The function of tank is to take care of expansion of the oil when the gear box is under running condition as this being splash lubrication system the top bearing are partially immerged in the oil, i.e. the Gearbox is approximately filed up fully, because of chur ning, fumes or expansion takes place the oil will be regulated through the expansion tank, and no pressure will built up in the gear box and which will restrict the leakage from oil seal and excessive heating of the oil.

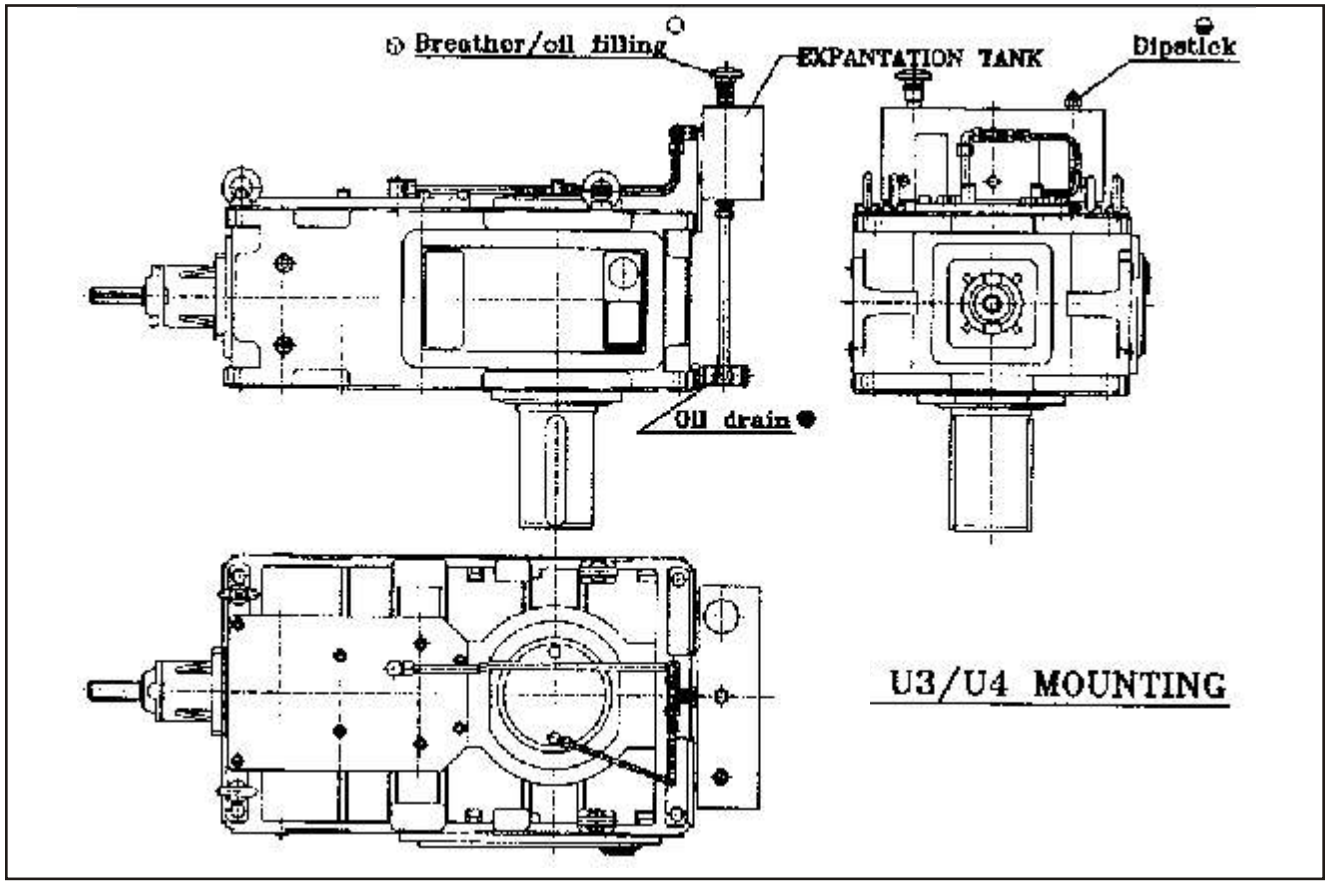

15 TORQUE ARM MOUNTING

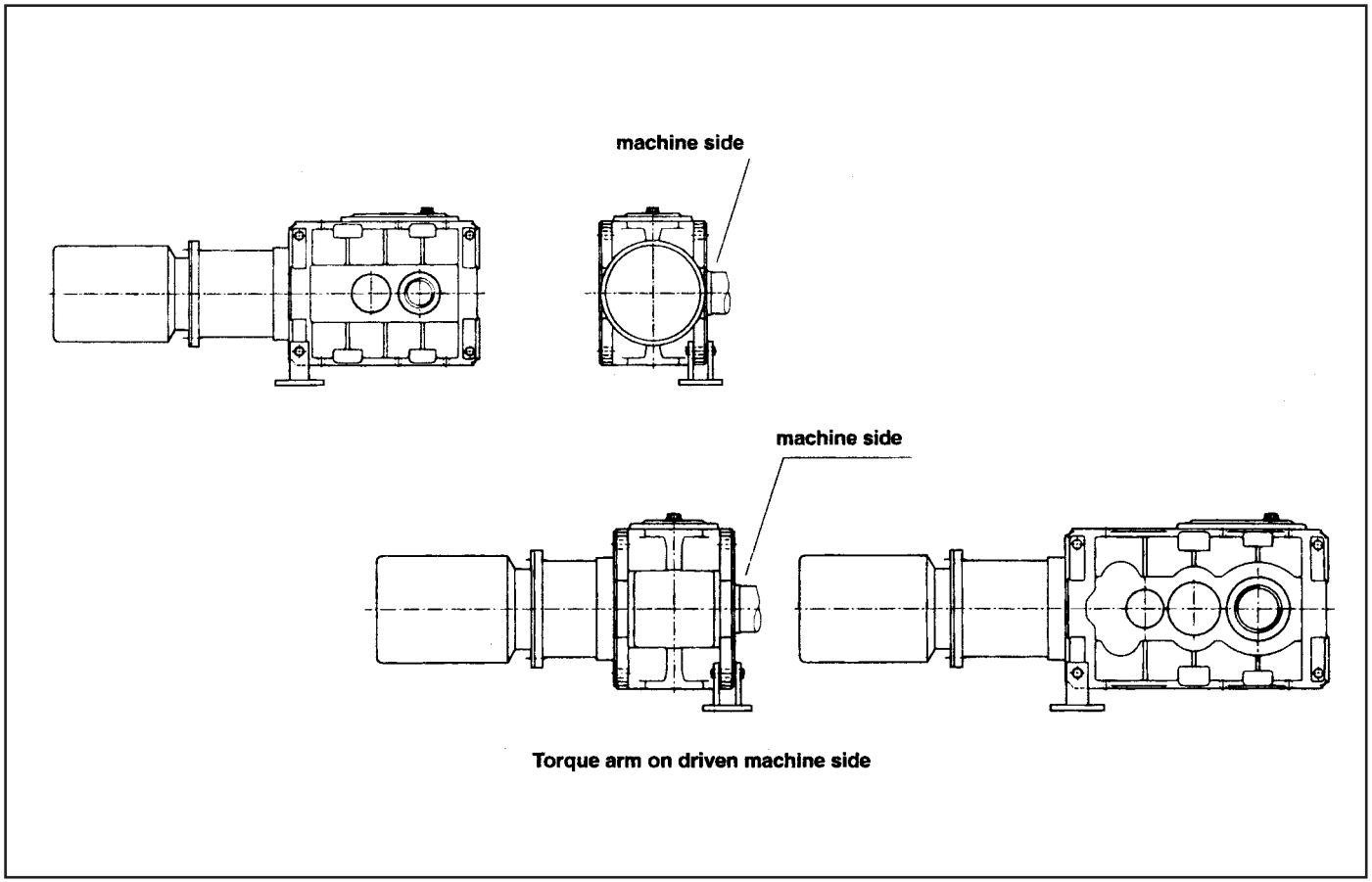

16 Procedure of mounting the Hollow Shaft with Gear Box.

Fit gear unit by means of nut and threaded spindle support is provided by the hollow shaft.

Caution! The hollow shaft should be in alignment with the machine shaft so that no canting will take place.

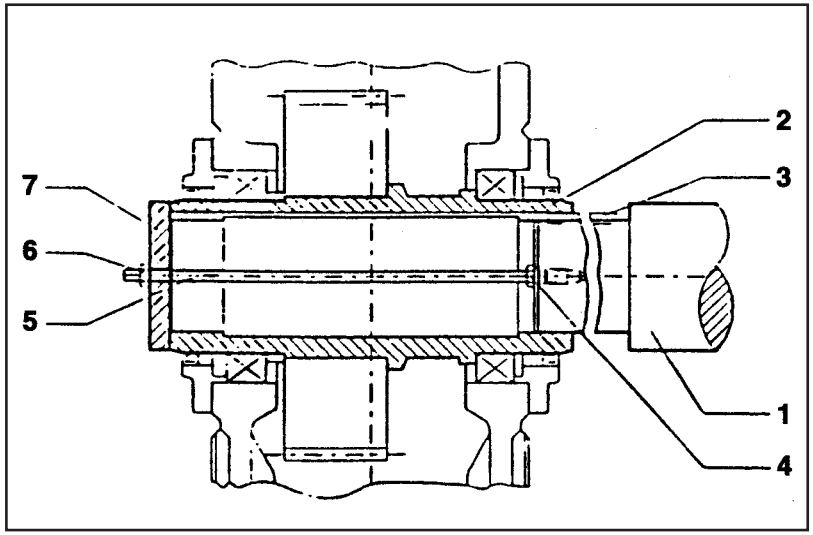

Fig. 2

(1) Clean the rust coating from Hollow Shaft.
(2) Clean the machine shaft.
(3) Apply medicate on machine shaft for easy fitting and avoid rusting after fitting.
(4) Fit the machine shaft.

Figure 1

1	Machine shaft	5	Threaded spindle
2	Hollow shaft	6	Nut
3	Parallel key	7	End plate
4	Nut		

Instead of using the shown nut and threaded spindle, e.g. hydraulic lifting device may alternatively be used.

16.1 Axial locking :

Depending on the design , secure hollow shaft axially on the machine shaft (circlip , end plate, screw, and other.)

16.2 Disassembly

16.2.1 Remove axial safety device of hollow shaft.

Incase of formation of the rust at the seat surfaces press penetrating oil into the void of the bore and thus against the seats by means of a pump or similar so that the gear unit can be pilled off more easily. Feeding the penetrating oil is carried out via bores in the machine shaft see Fig. 2 or in the end plate.

16.2.2 Pull off the gear unit by means of the device according to figure after sufficient reaction time of the penetrating oil.

CAUTION : Make sure that there is no canting during pulling off.

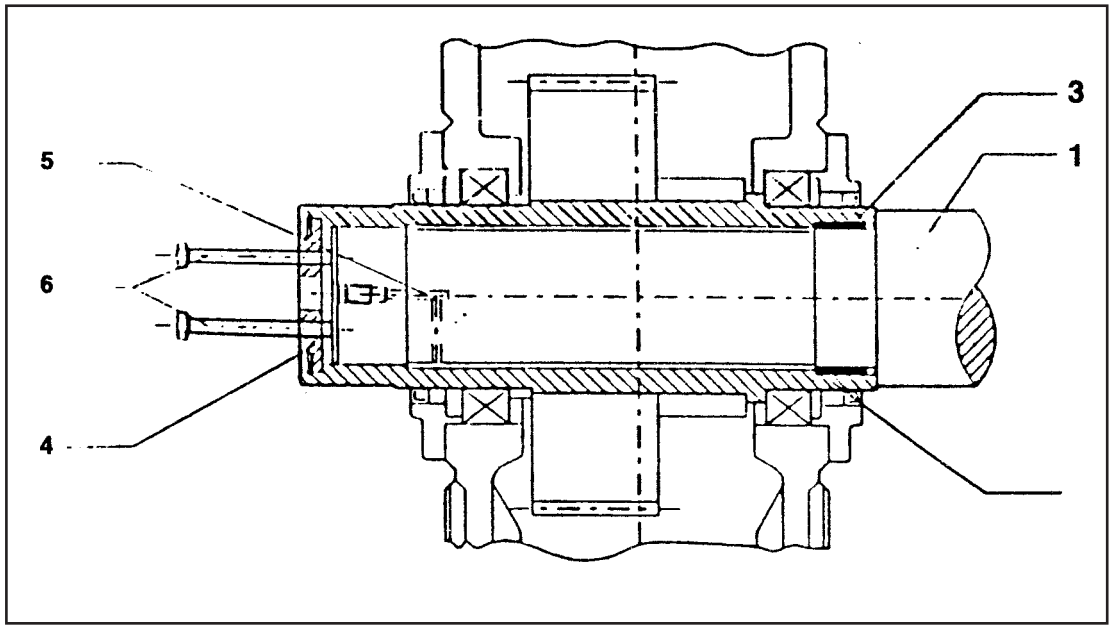

Fig. 3

Figure 5

1 Machine shaft
4 End plate
2 Hollow shaft
5 Bore for feeding penetrating oil
3 DU bush
6 Forcing screws

16.3 Hollow Shaft Mounting with Shrink Disc

16.3.1 The shrink disc is delivered ready for installation.

CAUTION : **Do not disassemble shrink disc before first clamping.**

CAUTION : **In the area of the shrink disc seat, the bore of the hollow shaft as well as the machine shaft should be absolutely free of grease, As it will have negative effect on torque transmission.**
The safety of the torque transmission depends on it to a great extent.
Dirty solvents and cleaning rags are unsuitable for degreasing.

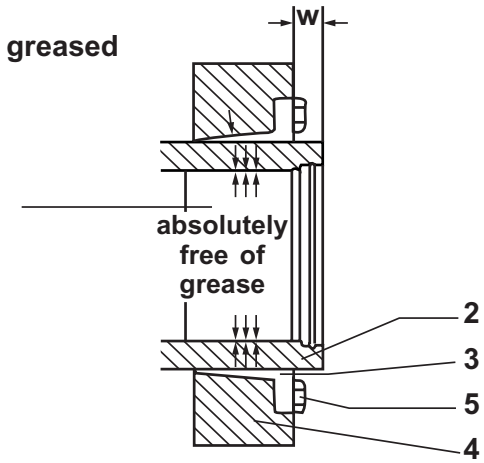

1 Machine Shaft
4 Outer race
2 Hollow shaft
5 Clamping screw
3 Inner race

The exact mounting distance (W) of the shrink disc can be taken from the dimension drawing.
Note : In the area of the shrink disc seat, the outer surface of the hollow shaft may be greased.

CAUTION : **Never tighten the clamping screws before the machine shaft is installed, too.**
The clamping screws are to be tightened in several turns one after the other.

CAUTION : **Never tighten screws crosswise!**

Tighten all clamping screws until the front surfaces of the outer and inner race are flush.
Note : The correct clamping state can thus be checked visually.

CAUTION : **To avoid overloading the individual screws, the max. tightening torque (see table) must not be exceeded, what is more important is that the faces are flush. If this flushness cannot be reached during clamping, consultation is necessary.**

MAXIMUM TIGHTENING TORQUE OF THE CLAMPING SCREW

CLAMPING SCREW THREAD	MAX TIGHTENING TORQUE PER SCREW (Nm)
M8	35
M10	70
M12	121
M14	193
M16	295
M20	490
M24	840
M27	1450
M30	1650
M33	2220
M36	2850

16.3.2 Disassembly of the shrink disc
The loosening procedure is similar to that of clamping.
The clamping screws are to be loose in several turns one after the other.
If the outer race does not come off the inner race by itself, some clamping screws can be unscrewed and screwed in into the neighboring forcing threads.
Unclamping is then possible without any problem.

16.3.3 Pull of the shrink disc of the hollow shaft.
Clean and lubricate the shrink disc.
Loosened shrink discs do not have to be taken apart and lubricated again before being re-clamped. The shrink disc is only to be disassembled and cleaned when it is dirty.

CAUTION : **Only the inner sliding surfaces of the shrink disc are to be lubricated again in the connection.**

17 Putting into Operation

17.1 Alignment

Foot-mounting gear units must be mounted free from distortion on a level foundation. Shaft mounted reducers must be mounted with a holding fixture to support the torque reaction.

The gear unit must be mounted so that the gear shaft is aligned precisely with the shaft on the machine or installation.

The gear unit may be mounted inclined only if this has been agreed upon specifically with the manufacturer.

Oil level, inspection holes, oil drain holes and maintenance covers must be freely accessible.

Safety devices and guards must not obstruct heat dissipation or cooling air ducting.

Transmission elements such as gear wheels and sprockets, couplings and belt pulleys must be fitted on to the shaft ends with bolts (in the shaft centering thread). The shaft ends may be lightly greased or treated with MoS2 in order to simplify assembly (not on shrink-fit pulleys). It is advisable to heat up the components to be fitted (approximately 80°C). Do not hammer the shafts since this could damage bearings, pulley sets, wheels or rotary shaft seals.

After the installation, the gear must exactly balance with the motor and with the drive shaft to be coupled in the operating condition. In order to fulfill this condition, the runout and axial clearance should be checked as per the arrangement shown as below.

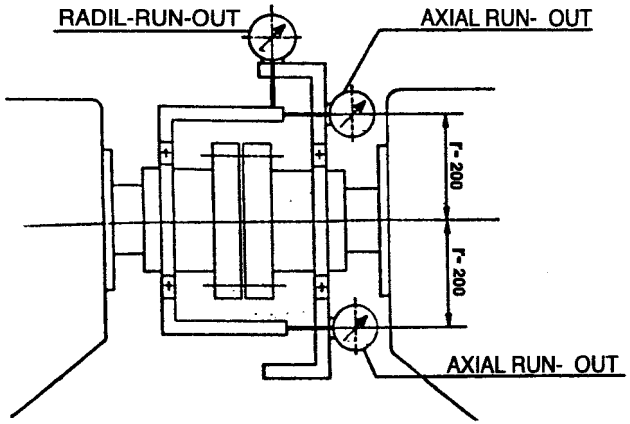

TYPE OF COUPLING	RADIAL RUNOUT	AXIAL RUNOUT (DIST. R=200MM)
Rigid Coupling	0.03mm	0.02mm
Elastic Coupling	0.1mm	0.1mm

If R 200 mm, then corresponding enlargement of the axial run out should be envisaged.

17.2 Assembly of auxiliary devices

The separate operating instructions for auxiliary equipment mounted on the gear unit (e.g. oil pump, cooler etc.) must be observed during assembly and before putting into operation.

17.3 Electrical connections

Electrical connections must be performed by a registered electrician. The general and local regulations applicable to electrical connection, and particularly with respect to safety measures, must be observed. Produce connections in accordance with the supplied circuit diagram and/or circuit diagram in the terminal box.

17.4 Putting into operation

Before putting the gear unit into operation, check to make sure that all safety guards are fitted and functioning. If safety guards do not form part of the scope of delivery of ELECON, the operator must protect all moving parts by safety guards in order to exclude the risk of accidents. The gear must be filled with oil before putting into operation, since it is supplied without oil.

17.4.1 Oil filling

The gear must be filled with oil at standstill. The oil quality must correspond to the oils in the lubricant table. The gear unit must filled exactly to the markings on the sight glass, dipstick or on the overflow opening to ensure the correct oil quantity. Only fresh oil must be used. Close all oil filler opening.

In the case of gear units with an external oil pump, make sure that the main motor starts only when the pump is working.

17.4.2 Trial operation

After switching on the gear, proper functioning of the gear unit must be checked in no-load condition if possible. It is recommended to run the system only at partial load for some time and to only gradually increase the load.

The heat build-up which occurs under load is normal and acceptable up to oil temperature of approx. 80°C to 90°C. The auxiliary devices (e.g. oil pump, cooler etc.) must be checked during trial operation to ensure that they are functioning properly.

18 Maintenance

18.1 Servicing

Make sure that no contamination is allowed to enter the gear unit during servicing. Servicing is restricted to the following work.
The gear temperature must be checked daily if possible during operation. The oil level must be checked daily if possible when the gear is at a standstill. At this opportunity, the gear unit must be examined for traces of oil leakage. An oil change must be performed on the gear unit with one of the recommended oil types at the prescribed intervals (see oil change intervals). The service cover, oil filler screws and oil drain screws must be opened only when the gear is at a standstill.

18.1.1 Observe warning signs !

Clean the oil sight glass or gauge glass at every oil change. The oil filter insert must be cleaned or replaced if fitted on the gear unit (see operating instructions for oil filter).

Drain the oil when the gear is warm by opening the oil drain screw.

CAUTION : Danger of scalding !

We recommend wearing protective clothing, including goggles and gloves.

When draining and disposing of the old oil, make sure that there is no pollution of or risk to the environment (e.g. ground water, danger of fire). The old oil must be collected and disposed of in accordance with the relevant regulations. After draining the old oil, close the oil drain, opening and fill the gear with new oil up to the middle of the oil sight glass (see 1.4.1).

18.1.2 Oil change intervals and oil types

First oil change after approx. 500 operating hours,

further oil changes after every 3000 operating hours,

but at the latest after 18 months.

Ambient Temp. oC	Lubrication method	Input speed n1 RPM *	
		500...1000	> 1000...1500
		Viscosity class ISO VG... DIN 51519	
- 10...+ 5	Pressure lubrication Splash lubrication	VG 100	VG 100
0...+ 40	Pressure lubrication	VG 150	VG 150
	Splash lubrication	VG 320	VG 220
+ 35...+ 60	Pressure lubrication	VG 320	VG 320
	Splash lubrication	VG 460	VG 320

* Please enquire if input speed n1 is less than 500 RPM.

					Recommended Oil Quality : CLP in accordance with DIN 51517 / 51502.								
	CASTROL	BHARAT PETROLEUM	INDIAN OIL	HINDUSTAN PETROLEUM	MOBIL	ESSO	SHELL	SUNOCO	TEXACO	CHEVRON	ARAL	TRIBOL	OPTIMAL
VG 100	Alpha SP 100	Amocam Oil 100	Servomosh SP 100	Parthan EP-100	Mobilgear 627	Spartan EP 100	Omala 100		Meropa 100	Gear Compound EP 100	Degol BG 100	Trebol 1100/100	Optiger BM 100
VG 150	Alpha SP 150	Amocam Oil 150	Servomosh SP 150	Parthan EP-150	Mobilgear 629	Spartan EP 150	Omala 150	Sunep 1070	Meropa 150	Gear Compound EP 150	Degol BG 150	Trebol 1100/150	Optiger BM 150
VG 220	Alpha SP 220	Amocam Oil 220	Servomosh SP 220	Parthan EP-220	Mobilgear 630	Spartan EP 220	Omala 220	Sunep 1070	Meropa 220	Gear Compound EP 220	Degol BG 220	Trebol 1100/220	Optiger BM 220
VG 320	Alpha SP 320	Amocam Oil 320	Servomosh SP 320	Parthan EP-320	Mobilgear 632	Spartan EP 320	Omala 320	Sunep 1090	Meropa 320	Gear Compound EP 320	Degol BG 320	Trebol 1100/320	Optiger BM 320
VG 460	Alpha SP 460	Amocam Oil 460	Servomosh SP 460	Parthan EP-460	Mobilgear 634	Spartan EP 460	Omala 460	Sunep 460	Meropa 460	Gear Compound EP 460	Degol BG 460	Trebol 1100/460	Optiger BM 460

19 Repair

Before starting work on the gear unit, secure its drive and auxiliary devices to prevent them from being switched on accidentally. The installation must be disconnected from the electrical power supply and mechanically secured to prevent shaft rotation.

Before undoing shaft connections, make sure that no torques are present at the shaft connection (stresses within the system). Such systems must be relieved at a suitable location.

Experts from the system manufacturer must be consulted for this purpose.

The spare parts drawing of the gear unit should be available for reference in order to avoid damage to components as a result of dismantling or assembly errors. The sealing surfaces must be cleaned (grease-free) before assembly and coated with a surface sealing compound such as Loctite type 573 or an equivalent product.

20 Dismantling the gear

Drain and dispose of the gear oil.

Disconnect the supply lines, e.g. electrical power, water, oil.

Remove the protective devices for the transmission elements from the drive and output shafts (e.g. coupling, belt pulley, gear wheels and chain wheels).

Disconnect the gear from the machine by removing the transmission elements.

Attach the gear unit to the means of transport, if possible.

Undo the gear fixing screws.

Transport the gear unit to the workplace.

21 Replacing the rotary shaft seals

Mark, undo and remove the bearing cover.

Check the seal running seat of the shaft for damage.

Repair any damage by polishing with a fine polishing cloth.

Remove the old shaft seal from the bearing cover.

Clean (grease-free) the sealing surfaces on the housing and bearing cover.

Fit the new seal in the bearing cover.

Grease the seal running fit.

Coat the sealing surfaces of the bearing cover with sealing compound, e.g. Loctite 573.

Fit the bearing cover by carefully rotating to and fro so that the sealing ring lip is not damaged.

Screw the bearing cover on tight.

22 Replacing bearings and gear wheels (Only for size 35 and onward)

Mark, undo and remove the bearing cover.

Undo and remove the connecting screws of the housing.

Remove the top part of the housing.

Pull the defective bearings and gear wheels off their shafts.

Important : Avoid damaging the seal running seat on the shaft.

Mount the new bearings and gear wheels.

Note : Mount the wheels and bearings in warm condition (approx. 80oC).

Coat the shafts with lubricant, e.g. MoS2.

Clean (grease-free) the sealing surfaces of the housing.

Coat the sealing surfaces of the housing with sealing compound,

e.g. Loctite 573.

Fit the top part of the housing.

Screw in the connecting screws of the housing.

Coat the sealing surfaces of the bearing cover with sealing compound.

Mount the bearing cover by carefully rotating to and fro.

Screw the cover on tight.

Tighten the connecting screws of the housing parts.

23 Assembling the gear unit

Attach the gear unit to the means of transport.

Transport the gear unit to the installation location.

Secure the gear unit with fixing screws. Attach torque support in the case of slip-on gears.

Connect supply lines, e.g. electric power, water, oil.

Connect the gear and machine by assembling the transmission elements (e.g. coupling, belt pulley, gear wheels and chain wheels).

Fit the protective devices for the transmission elements of the drive and output shafts.

24 Design types and designations

	Helical Gear	Direction of rotation*)	Bevel Helical gear
One-stage	B	opposite	-
Two-stage	C	same	LB
Three-stage	D	opposite	LC
Four-stage	E	same	LD

Epex Series (Extruder gear)

	Helical Gear	Direction of rotation*)
Two-stage	XC	same
Three-stage	XD	opposite

*) View from one gear side onto drive and output shaft end faces.
Direction of rotation of bevel spur gear, depending on arrangement of bevel gear set.

CROSS SECTIONAL ARRGT. FOR PB

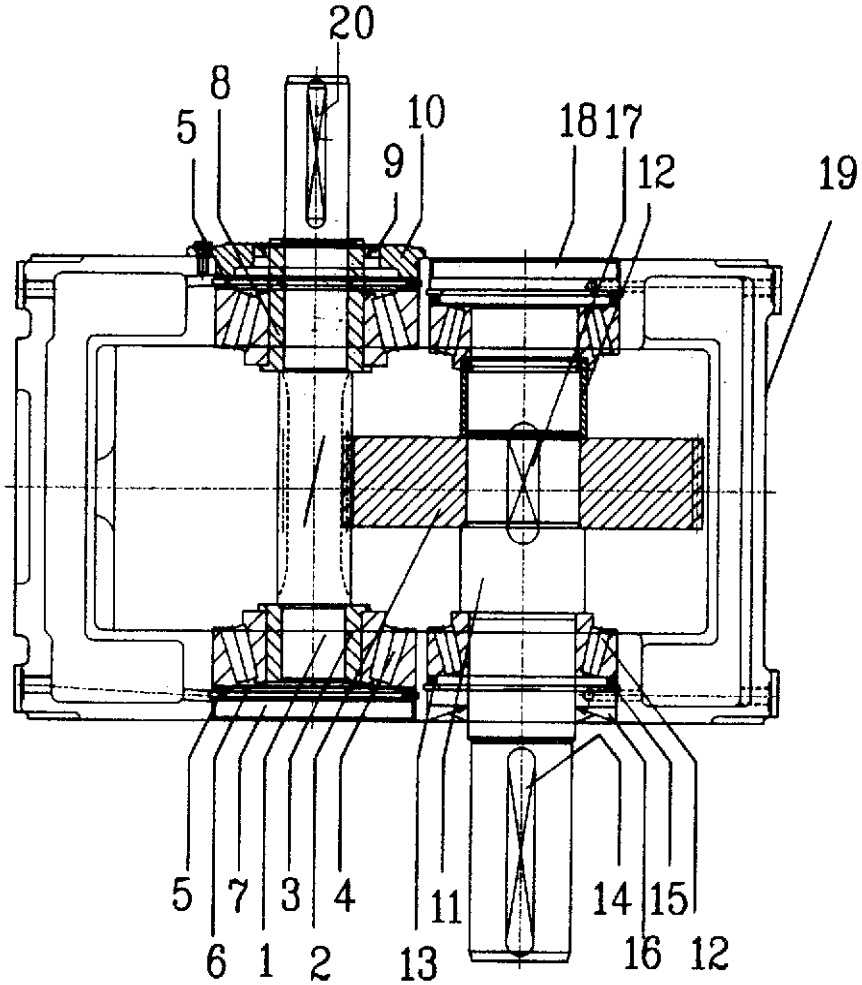

PART LIST		QTY.
1	INPUT PINION	1
2.	1st INTERMEDIATE WHEEL	1
3.	BRG.BUSH	1
4.	INPUT BRG.	1
5.	INPUT CIRCLIP	2
6	DISTANCE RING	1
7.	SEALING COVER	2
8.	BRG. BUSH	1
9.	OIL SEAL (INPUT)	1
10.	OPEN COVER	1
11.	OUTPUT SHAFT	1
12.	OUTPUT BRG.	2
13.	DISTANCE RING	1
14.	KEY FOR OUTPUT SHAFT (EXT.)	1
15.	IN. CIRCLIP	2
16.	OIL SEAL (OUTPUT) (WHEEL FITTING)	1
17.	KEY FOR OUTPUT (INT)	1
18.	SEALING COVER	2
19.	GEAR CASE	1
20.	INPUT KEY	1

CROSS SECTIONAL ARRGT. FOR PC (SOLID SHAFT & HOLLOW SHAFT)

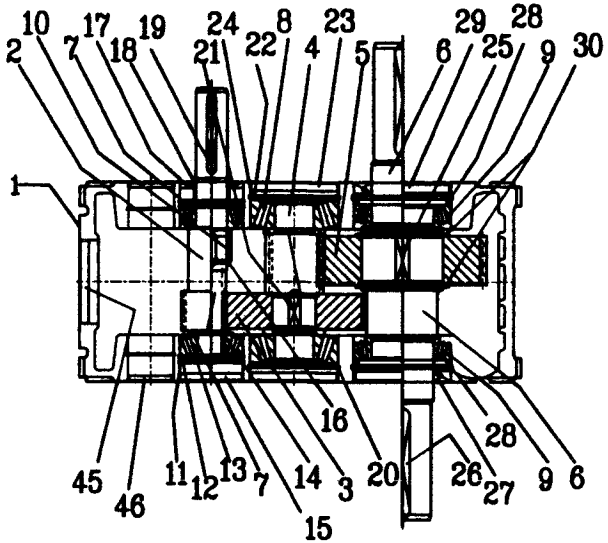

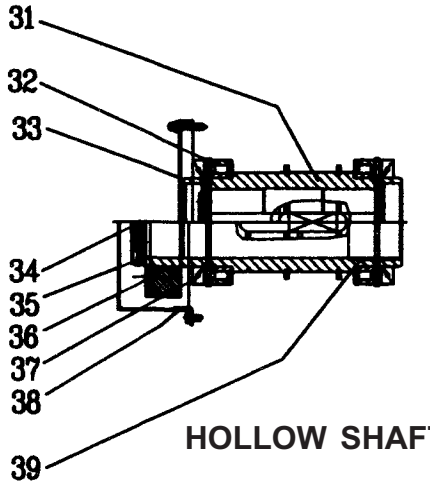

HOLLOW SHAFT

PART LIST		QTY.
1.	GEAR CASE	1
2.	INPUT PINION	1
3.	1st INTERMEDIATE WHEEL	1
4.	1st INTERMEDIATE PINION	1
5.	OUTPUT WHEEL	1
6.	OUTPUT SHAFT	1
7.	INPUT BRG.	2
8.	1st. INTERMEDIATE BRG.	2
9.	OUTPUT BRG.	2
10.	DISTANCE RING	1
11.	INT. CIRCLIP	2
12.	DISTANCE RING	1
13.	SHIMS SET	1
14.	INPUT BRG. BUSH	1
15.	SEALING COVER	1
16.	EXT.CRICLIP	1
17.	OIL SEAL (INPUT)	1
18.	BUSH	1
19.	KEY FOR INPUT PINION	1
20.	SHIMS SET	1
21.	KEY FOR 1st INT.MDT.PINION (WHEEL FITTING)	1
22.	INT. CIRCLIP	2
23.	SEALING COVER	2
24.	SHIMS SET.	1
25.	KEY FOR OUTPUT SHAFT(INT) (WHEEL FITTING)	1
26.	KEY FOR OUTPUT SHAFT(EXT.)	1
27.	OIL SEAL (OUTPUT)	1
28.	SEALING COVER	1
29.	INT. CIRCLIP	2
30.	EXT. CIRCLIP	2
31.	HOLLOW SHAFT	1
32.	CYLINDRICAL ROLLER BRG.	1
33.	END COVER	1
34.	END PLATE	1
35.	INT. CIRCLIP	1
36.	SHRINK DISC	1
37.	OIL SEAL	1
38.	PROTECTIVE COVER	1
39.	GUIDE BUSH	1

CROSS SECTIONAL ARRGT. FOR PD
(SOLID SHAFT & HOLLOW SHAFT)

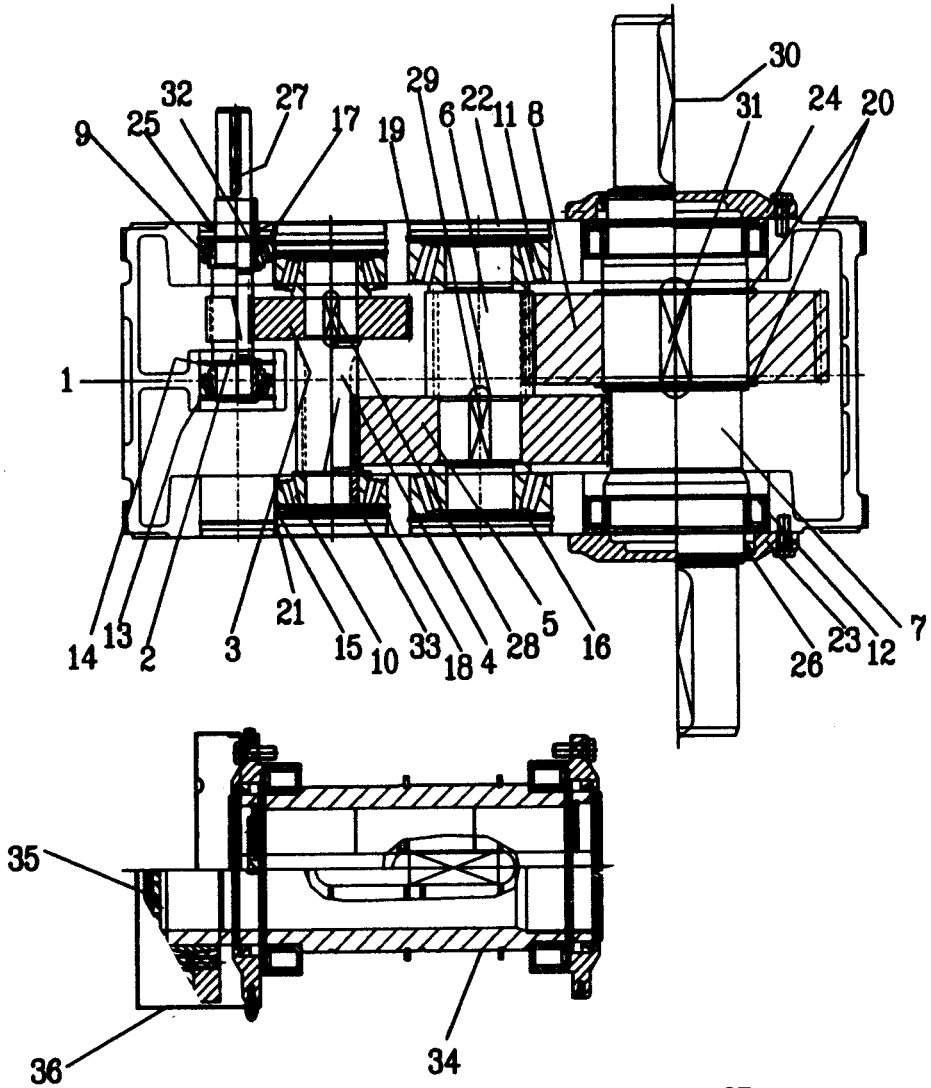

PART LIST		QTY.
1.	GEAR CASE	1
2.	INPUT PINION	1
3.	1st INTERMEDIATE WHEEL	1
4.	1st INTERMEDIATE PINION	1
5.	2nd INTERMEDIATE WHEEL	1
6.	2nd INTERMEDIATE PINION	1
7.	OUTPUT SHAFT	1
8.	OUTPUT WHEEL	1
9.	INPUT BRG.	2
10.	1st INTERMEDIATE BRG.	2
11.	2nd INTERMEDIATE BRG.	2
12.	OUTPUT BRG.	2
13.	SHIMS SET	2
14.	DISTANCE RING	1
15.	SHIMS SET	2
16.	SHIMS SET	2
17.	INT. CIRCLIP	2
18.	INT. CIRCLIP	2
19.	INT. CIRCLIP	2
20.	EXT. CIRCLIP	2
21.	SEALING COVER	2
22.	SEALING COVER	2
23.	OPEN COVER	1
24.	BLANK COVER	1
25.	OIL SEAL (INPUT)	1
26.	OIL SEAL (OUTPUT)	1
27.	KEY FOR INPUT PINION	1
28.	KEY FOR 1st INT.MDT.PINION (WHEEL FITTING)	1
29.	KEY FOR 2nd INT.MDT.PINION (WHEEL FITTING)	1
30.	KEY FOR OUTPUT SHAFT (WHEEL FITTING)	1
31.	KEY FOR OUTPUT SHAFT (EXT.)	1
32.	GUIDE BUSH	1
33.	GUIDE BUSH	1
34.	HOLLOW SHAFT	1
35.	END PLATE	1
36.	PROTECTIVE COVER	1

CROSS SECTIONAL ARRGT. FOR PE (SOLID SHAFT & HOLLOW SHAFT)

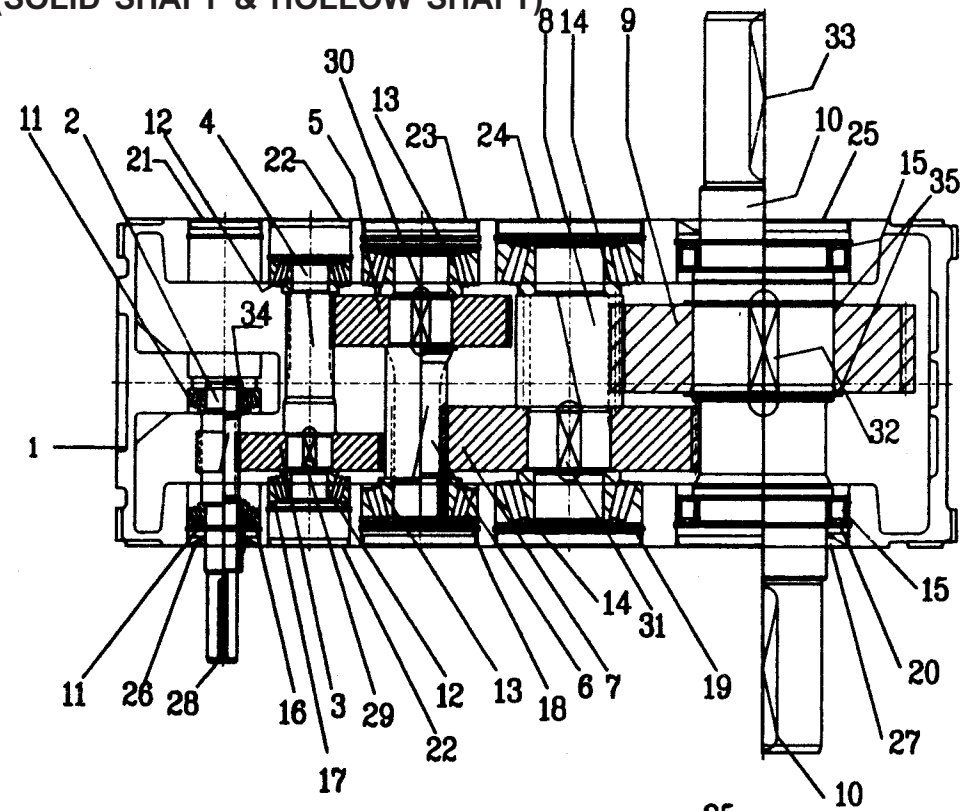

HOLLOW SHAFT

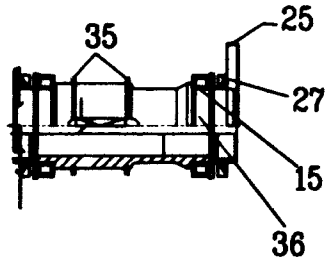

PART LIST		QTY.
1.	GEAR CASE	1
2.	INPUT PINION	1
3.	1st INTERMEDIATE WHEEL	1
4.	1st INTERMEDIATE PINION	1
5.	2nd INTERMEDIATE WHEEL	1
6.	2nd INTERMEDIATE PINION	1
7.	3rd INTERMEDIATE WHEEL	1
8.	3rd INTERMEDIATE PINION	1
9.	OUTPUT WHEEL	1
10.	OUTPUT SHAFT	1
11.	INPUT BRG.	2
12.	1st INTERMEDIATE BRG.	2
13.	2nd INTERMEDIATE BRG.	2
14.	3rd INTERMEDIATE BRG.	2
15.	OUTPUT BRG.	2
16.	DISTANCE RING	1
17.	DISTANCE RING	1
18.	INT. CIRCLIP	2
19.	INT. CIRCLIP	2
20.	INT. CIRCLIP	2
21	SEALING COVER	1
22.	SEALING COVER	1
23.	SEALING COVER	1
24.	SEALING COVER	1
25.	SEALING COVER	1
26.	OIL SEAL (INPUT)	1
27.	OIL SEAL (OUTPUT)	1
28.	KEY FOR INPUT PINION (EXT.)	1
29.	KEY FOR 1st. INT.MDT.PINION (WHEEL FITTING)	1
30.	KEY FOR 2nd.INT.MDT.PINION (WHEEL FITTING)	1
31.	KEY FOR 3rd. INT.MDT.PINION (WHEEL FITTING)	1
32.	KEY FOR OUTPUT SHAFT	1
33.	KEY FOR OUTPUT SHAFT (EXT.)	1
34.	BRG. BUSH	1
35.	EXT. CIRCLIP	2
36.	HOLLOW OUTPUT SHAFT	1

CROSS SECTIONAL ARRGT. FOR PLB
(SOLID SHAFT & HOLLOW SHAFT)

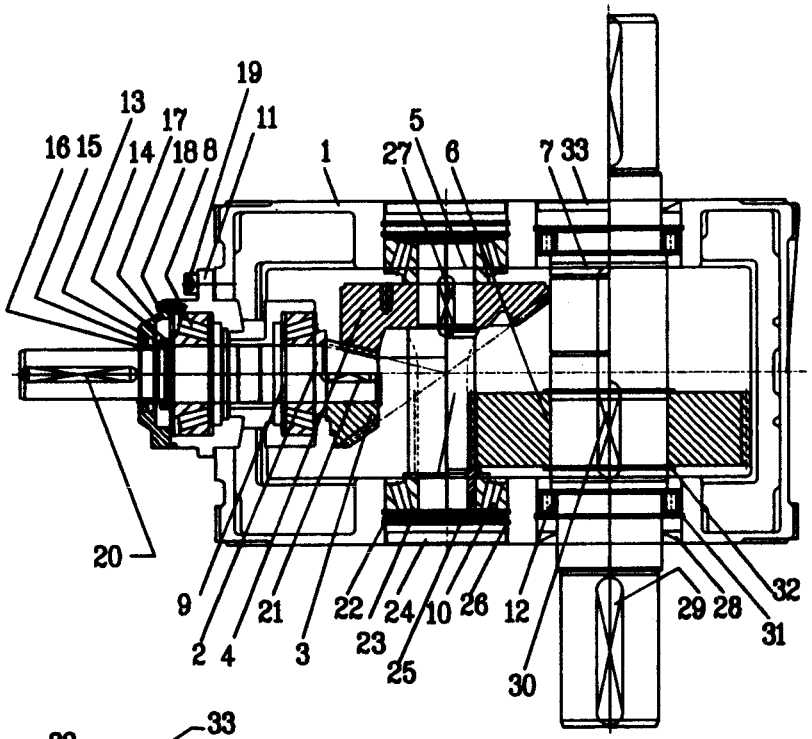

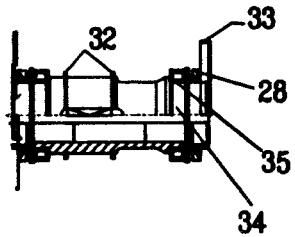

HOLLOW SHAFT

PART LIST		QTY.
1.	GEAR CASE	1
2.	INPUT PINION	1
3.	SPIRAL BEVEL	1
4.	1st INTERMEDIATE WHEEL	1
5.	1st INTERMEDIATE PINION	1
6.	OUTPUT WHEEL	1
7.	OUTPUT SHAFT	1
8.	INPUT BRG.	2
9.	INPUT SPIRAL BRG.	2
10.	1st.INTERMEDIATE BRG.	2
11.	BRG. SLEEVE	1
12.	OUTPUT BRG.	1
13.	LOCK NUT	1
14.	LOOK WASHER	1
15.	OIL SEAL (INPUT)	1
16.	GUIDE BUSH	1
17.	OPEN COVER	1
18.	HEXAGON SOCKET HEAD CAP-SCREWS	-
19.	HEXAGON SOCKET HEAD CAP-SCREWS	-
20.	KEY FOR INPUT	1
21.	KEY FOR INPUT PINION SPIRAL BEVEL	1
22.	SHIMS SET	1
23.	SHIMS SET	1
24.	SEALING COVER	1
25.	BRG. BUSH	1
26.	INT. CIRCLIP	2
27.	KEY FOR 1st.INT.MDT.PINION (WHEEL FITTING)	1
28.	OIL SEAL (OUTPUT)	1
29.	KEY FOR OUTPUT SHAFT (WHEEL FITTING)	1
30.	KEY FOR OUTPUT SHAFT (EXT.)	1
31.	INT. CIRCLIP	2
32.	EXT. CIRCLIP	2
33.	SEALING COVER	1
34.	HOLLOW SHAFT	1
35.	BRG. FOR HOLLOW SHAFT	1

CROSS SECTIONAL ARRGT. FOR PLC (SOLID SHAFT & HOLLOW SHAFT)

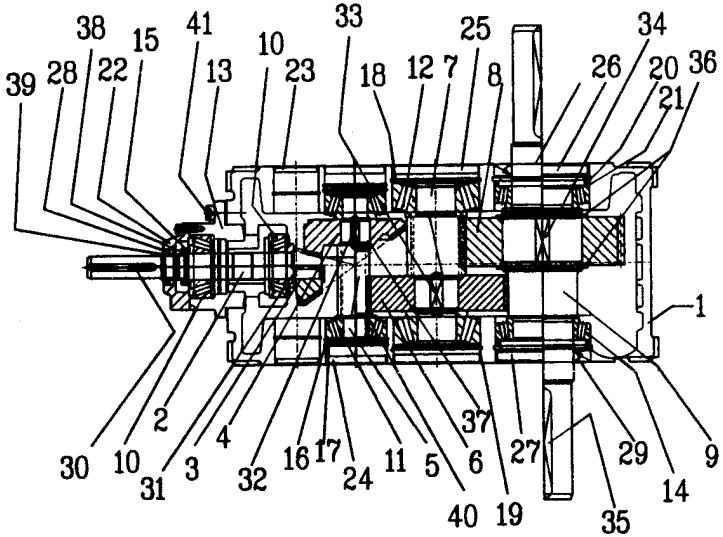

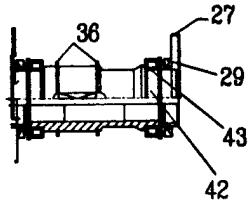

HOLLOW SHAFT

PART LIST		QTY.
1.	GEAR CASE	1
2.	INPUT PINION	1
3.	SPIRAL BEVEL	1
4.	1st. INTERMEDIATE WHEEL	1
5.	1st. INTERMEDIATE PINION	1
6.	2nd INTERMEDIATE WHEEL	1
7.	2nd INTERMEDIATE PINION	1
8.	OUTPUT WHEEL	1
9.	OUTPUT SHAFT	1
10.	INPUT BRG.	2
11.	1st INTERMEDIATE SPHERICAL BRG.	2
12.	2nd INTERMEDIATE BRG.	2
13.	BRG. SLEEVE	1
14.	OUTPUT BRG.	2
15.	LOCK WASHER	1
16.	INT. CIRCLIP	1
17.	SHIMS SET	1
18.	INT. CIRCLIP	1
19.	SHIMS SET	1
20.	DIST. RING	1
21.	SHIMS SET	1
22.	OPEN COVER	1
23.	SEALING COVER	2
24.	SEALING COVER	2
25.	SEALING COVER	2
26.	SEALING COVER	1
27.	SEALING COVER	1
28.	OIL SEAL (INPUT)	1
29.	OIL SEAL (OUTPUT)	1
30.	KEY FOR INPUT PINION	1
31.	KEY FOR INPUT PINION SPIRAL BEVEL (WHEEL FITTING)	1
32.	KEY FOR 1st.INT.MDT.PINION (WHEEL FITTING)	1
33.	KEY FOR 2nd.INT.MDT.PINION (WHEEL FITTING)	1
34.	KEY FOR OUTPUT SHAFT (WHEEL FITTING)	1

PART LIST		QTY.
35.	KEY FOR OUTPUT SHAFT (EXT.)	1
36.	EXT. CIRCLIP	2
37.	EXT. CIRCLIP	2
38.	LOCK NUT	1
39.	BUSH	1
40.	BRG. BUSH	1
41.	HEXAGON SOCKET HEAD CAP SCREWS	-
42.	HOLLOW SHAFT	1
43.	SPHERICAL BRG.	2

CROSS SECTIONAL ARRGT. FOR PLD SOLID SHAFT & HOLLOW SHAFT

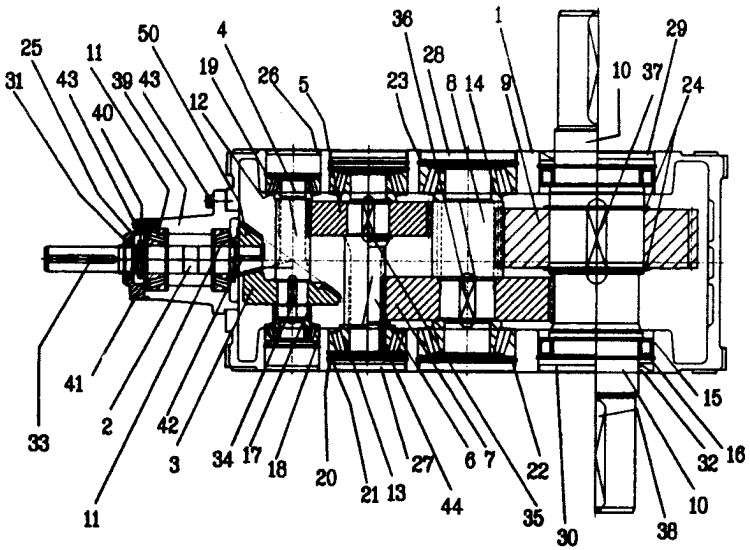

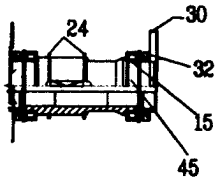

HOLLOW SHAFT

PART LIST		QTY.
1.	GEAR CASE	1
2.	INPUT PINION	1
3.	1st. INTERMEDIATE WHEEL	1
4.	1st. INTERMEDIATE PINION	1
5.	2nd INTERMEDIATE WHEEL	1
6.	2nd INTERMEDIATE PINION	1
7.	3rd INTERMEDIATE WHEEL	1
8.	3rd INTERMEDIATE PINION	1
9.	OUTPUT WHEEL	1
10.	OUTPUT SHAFT	1
11.	INPUT BRG.	2
12.	1st INTERMEDIATE BRG.	2
13.	2nd INTERMEDIATE BRG.	2
14.	3rd INTERMEDIATE BRG.	2
15.	OUTPUT BRG.	2
16.	INT. CIRCLIP	2
17.	DISTANCE RING	1
18.	DISTANCE RING	1
19.	DISTANCE RING	1
20.	INT. CIRCLIP	2
21.	SHIMS SET	1
22.	INT. CIRCLIP	2
23.	SHIMS SET	1
24.	EXT. CIRCLIP	2
25.	OPEN COVER	1
26.	SEALING COVER	1
27.	SEALING COVER	1
28.	SEALING COVER	1
29.	OPEN COVER	1
30.	SEALING COVER	1
31.	OIL SEAL (INPUT)	1
32.	OIL SEAL (OUTPUT)	1
33.	KEY FOR INPUT PINION	1
34.	KEY FOR 1st.INT.MDT.PINION (WHEEL FITTING)	1
35.	KEY FOR 2nd.INT.MDT.PINION (WHEEL FITTING)	1
36.	KEY FOR 3rd.INT.MDT.PINION (WHEEL FITTING)	1

PART LIST		QTY.
37.	KEY FOR OUTPUT SHAFT (WHEEL FITTING)	1
38.	KEY FOR OUTPUT SHAFT (EXT.)	1
39.	BRG. SLEEVE	1
40.	LOCK NUT	1
41.	LOCK WASHER	1
42.	KEY FOR INPUT SPIRAL-BEVEL	1
43.	HEXAGON SOCKET HEAD-CAP SCREWS	-
44.	BRG. BUSH	1
45.	HOLLOW OUTPUT SHAFT	1

CROSS SECTIONAL ARRGT. FOR PWC (SOLID SHAFT & HOLLOW SHAFT)

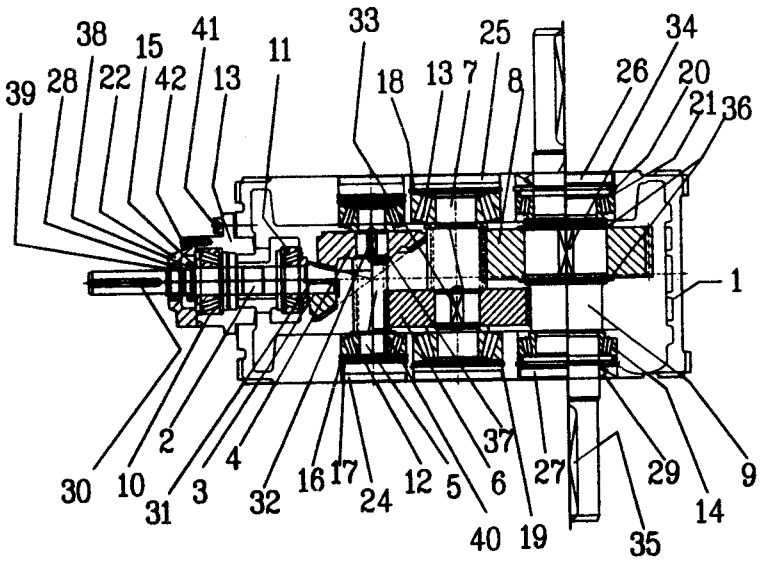

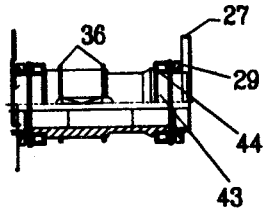

HOLLOW SHAFT

PART LIST		QTY.
1.	GEAR CASE	1
2.	INPUT PINION	1
3.	SPIRAL BEVEL	1
4.	1st INTERMEDIATE WHEEL	1
5.	1st INTERMEDIATE PINION	1
6.	2nd INTERMEDIATE WHEEL	1
7.	2nd INTERMEDIATE PINION	1
8.	OUTPUT WHEEL	1
9.	OUTPUT SHAFT	1
10.	INPUT BRG.	2
11.	1st INTERMEDIATE SPIRAL BRG.	2
12.	2nd INTERMEDIATE BRG.	2
13.	BRG.SLEEVE	1
14.	OUTPUT BRG.	1
15.	LOCK WASHER	1
16.	INT. CIRCLIP	2
17.	SHIMS SET	1
18.	INT. CIRCLIP	2
19.	SHIMS SET	1
20.	DISTANCE RING	1
21.	SHIMS SET	1
22.	OPEN COVER	1
24.	SEALING COVER	2
25.	SEALING COVER	2
26.	SEALING COVER	2
27.	SEALING COVER	1
28.	OIL SEAL (INPUT)	1
29.	OIL SEAL (OUTPUT)	
30.	KEY FOR INPUT PINION	1
31.	KEY FOR INPUT PINION SPIRAL-BEVEL (WHEEL FITTING)	1
32.	KEY FOR 1st. INT.MDT.PINION (WHEEL FITTING)	1
33.	KEY FOR 2st. INT.MDT.PINION (WHEEL FITTING)	1
34.	KEY FOR OUTPUT SHAFT (WHEEL FITTING)	1
35.	KEY FOR OUTPUT SHAFT (EXT.)	1
36.	EXT. CRICLIP	2
37.	EXT. CRICLIP	2
38.	LOCK NUT	1

PART LIST		QTY.
39.	BUSH	1
40.	BRG. BUSH	1
41.	HEXAGON SOCKET HEAD-CAP SCREWS	-
42.	HEXAGON SOCKET HEAD-CAP SCREWS	-
43.	HOLLOW SHAFT	1
44.	BRG.FOR HOLLOW SHAFT	2

CROSS SECTIONAL ARRGT. FOR PWD SOLID SHAFT & HOLLOW SHAFT

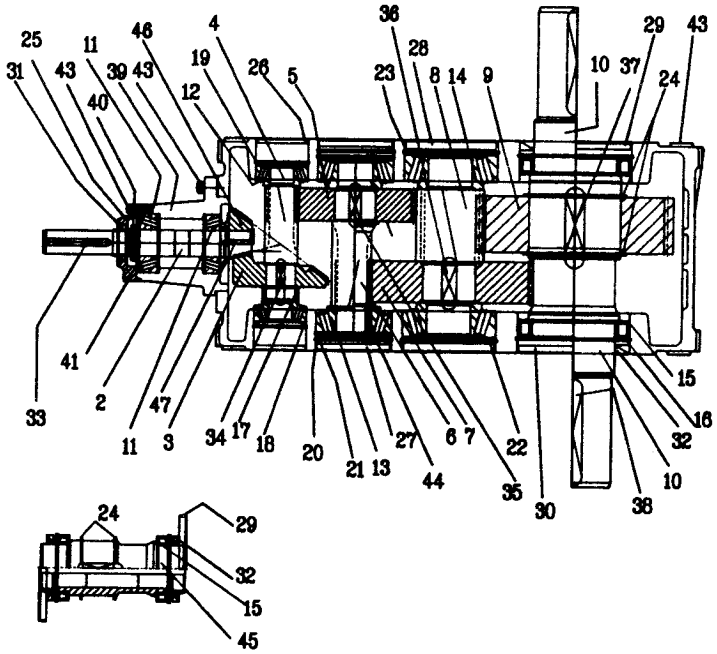

HOLLOW SHAFT

PART LIST	QTY.
1. GEAR CASE	1
2. INPUT PINION	1
3. 1st. INTERMEDIATE WHEEL	1
4. 1st. INTERMEDIATE PINION	1
5. 2nd INTERMEDIATE WHEEL	1
6. 2nd INTERMEDIATE PINION	1
7. 3rd INTERMEDIATE WHEEL	1
8. 3rd INTERMEDIATE PINION	1
9. OUTPUT WHEEL	1
10. OUTPUT SHAFT	1
11. INPUT BRG.	2
12. 1st INTERMEDIATE BRG.	2
13. 2nd INTERMEDIATE BRG.	2
14. 3rd INTERMEDIATE BRG.	2
15. OUTPUT BRG.	2
16. INT. CIRCLIP	2
17. DISTANCE RING	1
18. DISTANCE RING	1
19. DISTANCE RING	1
20. SHIMS SET.	1
21. INT.CIRCLIP	2
22. SHIMS SET.	1
23. SHIMS SET.	1
24. EXT. CIRCLIP	2
25. OPEN COVER	1
26. SEALING COVER	2
27. SEALING COVER	2
28. SEALING COVER	2
29. SEALING COVER	1
30. SEALING COVER	1
31. OIL SEAL (INPUT)	1
32. OIL SEAL (OUTPUT)	1
33. KEY FOR INPUT PINION	1
34. KEY FOR 1st.INT.MDT.PINION (WHEEL FITTING)	1
35. KEY FOR 2nd.INT.MDT.PINION (WHEEL FITTING)	1
36. KEY FOR 3rd.INT.MDT.PINION (WHEEL FITTING)	1
37. KEY FOR OUTPUT SHAFT (WHEEL FITTING)	1

PART LIST	QTY.
38. KEY FOR OUTPUT SHAFT (EXT.)	1
39. BRG.SLEEVE	1
40. LOCK NUT	1
41. LOCK WASHER	1
42. HEXAGON SOCKET HEAD-CAP SCREWS	-
43. BRG. BUSH	1
44. HOLLOW SHAFT	1
45. SPIRAL WHEEL	1
46. KEY FOR INPUT PINION SPIRAL-BEVEL	1

CROSS SECTIONAL ARRGT. FOR KPLD

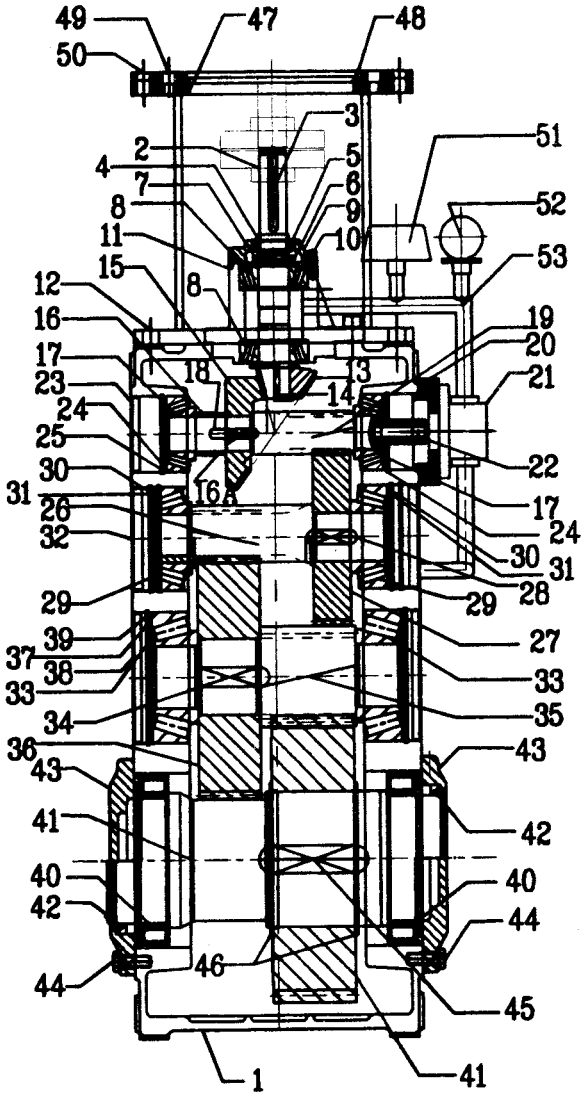

PART LIST		QTY.
1.	GEAR CASE	1
2.	SPIRAL BEVEL INPUT PINION	1
3.	KEY FOR INPUT PINION	1
4.	BUSH	1
5.	OIL SEAL (INPUT)	1
6.	LOCK NUT	1
7.	LOCK WASHER	1
8.	INPUT BRG.	2
9.	OPEN COVER	1
10.	HEX. HD. BOLT	4
11.	BRG. SLEEVE	1
12.	HEX. BOLT	4
13.	SPIRAL BEVEL WHEEL	1
14.	SPIRAL BEVEL KEY	1
15.	1st. INTERMEDIATE WHEEL	1
16.	BUSH	1
16A.	BUSH	1
17.	1st. INTERMEDIATE BRG.	2
18.	KEY FOR INT.MDT.PINION	1
19.	1st. INT.MDT.PINION	1
20.	ADAPTER PLATE	1
21.	PUMP	1
22.	COUPLING	1
23.	SEALING COVER	2
24.	INT. CIRCLIP	2
25.	SHIMS SET	2
26.	2nd INTERMEDIATE PINION	1
27.	2nd INTERMEDIATE WHEEL	1
28.	KEY FOR 2nd INT.MDT.PINION	1
29.	2nd INTERMEDIATE BRG.	2
30.	INT. CIRCLIP	2
31.	SHIMS SET	2
32.	SEALING COVER	2
33.	3rd INTERMEDIATE BRG.	1
34.	KEY FOR 3rd.INT.MDT.PINION	1
36.	3rd INTERMEDIATE WHEEL	1
37.	INT. CIRCLIP	2
38.	SHIMS SET	2
39.	SEALING COVER	2
40.	OUTPUT WHEEL	1
41.	OUTPUT SHAFT	1
42.	OIL SEAL (OUTPUT)	2
43.	OPEN COVER	2

PART LIST		QTY.
44.	HEXAGON BOLT	6
45.	KEY FOR OUTPUT WHEEL	1
46.	CIRCLIP EXT.	2
47.	MOTOR ADAPTER	1
48.	ADAPTER PLATE	1
49.	SOCKET HEAD HEX. BOLT	4
50.	HEXAGON SCREW	4
51.	PRESSURE SWITCH	1
52.	PRESSURE GAUGE	1
53.	M.S. PIPE	-

CROSS SETOF HOLLOW SHAFT FOR EXTRUDER GEAR

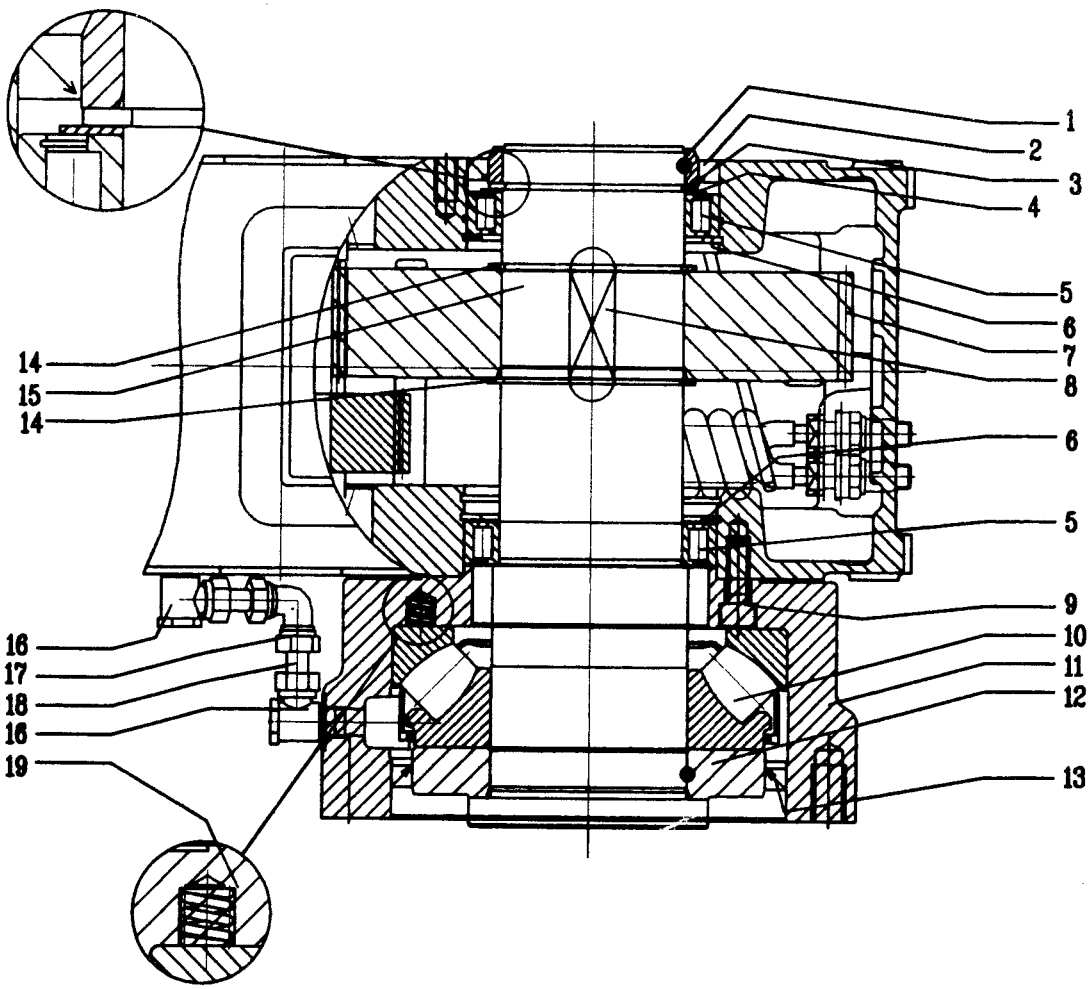

PART LIST		QTY.
1.	INNER RING	1
2.	OIL SEAL	2
3.	DISTANCE RING	1
4.	SHIMS SET	2
5.	CY. ROLLER BRG.	2
6.	INT. CIRCLIP	2
7.	WHEEL	1
8.	KEY BOTH SIDE SQUARE	1
9.	SOCKET HEAD CAP SCREW	8
10.	SPHERICAL ROLLER THRUST BRG.	1
11.	BRG. HOUSING	1
12.	DISC. PLATE	1
13.	OIL SEAL	1
14.	EXT. CIRCLIP	2
15.	HOLLOW SHAFT	1
16.	BRASS MALE CONNECTOR ASSLY	4
17.	BRASS MALE ELBOW	1
18.	COPPER TUBE	2
19.	SPRING	6

EP-SERIES GEAR SPARE PARTS AND SERVICE FACILITY

1. **Stocking of Spare Parts :**

   Maintain stock of most of the emergency spare parts to replace at site, which will help customer for servicing the Gear unit at any time.

2. When ordering the Spare parts, please refer Spare Parts list given in the Manual.

3. Following details to be furnished when ordering the Spare parts :

   - Type & Size of the Gear box
   - Ratio
   - Serial Number of the Gear box
   - Part Number

4. Based on above details, our concerned Branch will submit suitable offer and on acceptance of the offer, order can be placed on the concerned Branch.

CAUTION :

- Elecon assure warranty for the original Spares / accessories being supplied.

- Elecon is not responsible for any damage or failure due to use of spares / accessories procured by customer from any other source than Elecon.

5. Following are the addresses of our Branches for ordering Spare parts and rendering the services :

36- Helical_12-10-02 Final Proof Dt. 2-11-2002

For any service requirements. Please contact our office with complete name plate details

SELLING AGENT

EMTICI ENGINEERING LTD.,

REGISTERED OFFICE
Anand - Sojitra road, Vallabh Vidyanagar 388 120 Gujarat, India. Phone : +91(2692) 230168, 31125 Fax : +91-2692-236508

AHMEDABAD
Ph. No. : +91-79-6406683,84,85,86
Fax No. : +91-79-6401363
E-mail : sales@ahdemtici.elecon.com

BILASPUR
Phone : +91-7752-47347, 28922, 24122
Fax : +91-7752-23188
E-Mail : sales@bspemtici.elecon.com

DHANBAD
Phone : +91-326-306283, 302320
Fax : +91-326-302320
E-Mail : sales@dhnemtici.elecon.com

NEW DELHI
Phone : +91-11-3414339,
3414341, 3414069, 3414634
Fax : +91-11-3709046
E-Mail : sales@delemtici.elecon.com

ELECON SINGAPORE PTE. LTD.
Phone : 65-227-8258, 65-227-8425
Fax : 65-227-8942
E-mail: elecon_sing@eleconsingapore.elecon.com

ASANSOL
Phone : +91-341-205901, 202038, 211726
Fax : +91-341-202038
E-Mail : sales@asnemtici.elecon.com

KOLKATA
Phone : +91-33-4761861, 4760876,
4760904, 4760926
Fax : +91-33-4761831
E-Mail : sales@calemtici.elecon.com

JAMSHEDPUR
Phone : +91-657-428138, 435382
Fax : +91-657-428015
E-Mail : sales@jsremtici.elecon.com

NAGPUR
Phone : +91-712-540771, 531601
Fax : +91-712-531450
E-Mail : sales@ngpemtici.elecon.com

PUNE
Phone : +91-20-4330646
Fax: +91-20-4330646
Email : sales@puneemtici.elecon.com

BANGALORE
Phone : +91-80-2260219, 2281834, 2250082
Fax : +91-80-2281834
E-Mail : sales@blremtici.elecon.com

CHENNAI
Phone : +91-44-4349237, 4349497,
4349643, 4322455
Fax : +91-44-4349643
E-mail : sales@cheemtici.elecon.com

MUMBAI
Phone : +91-22-22821315, 22820725,
22821365, 22870792, 22815693
Fax : +91-22-22870791
E-Mail : sales@bomemtici.elecon.com

SECUNDERABAD
Phone : +91-40-7844748, 7845250, 7846984
Fax : +91-40-7848317
E-Mail : sales@secemtici.elecon.com

INTERNATIONAL BUSINESS DIVISION
Phone : +91(11) 3414339,40,41 (D) 3709047
Fax : +91(11) 3709046
E-mail: sales@delemtici.elecon.com.

Manufacturer by:

ELECON ENGINEERING COMPANY LTD.

POST BOX # 6, VALLABH VIDYANAGAR - 388120, GUJARAT, INDIA.
MHE DIVN. : Tel. : +91 (2692) 237016, 236590, Fax : + 91(2692) 236457 E-Mail : bjbabaria@mhe.elecon.com
GEAR DIVN. : Tel.: +91-2692-236469, 236513, 236516 Fax : 91-2692-236559 E-Mail : jnshah@gear.elecon.com
Web Site : http://www.elecon.com

ELECON

Always a step ahead in technology

IF IN DOUBT ASK

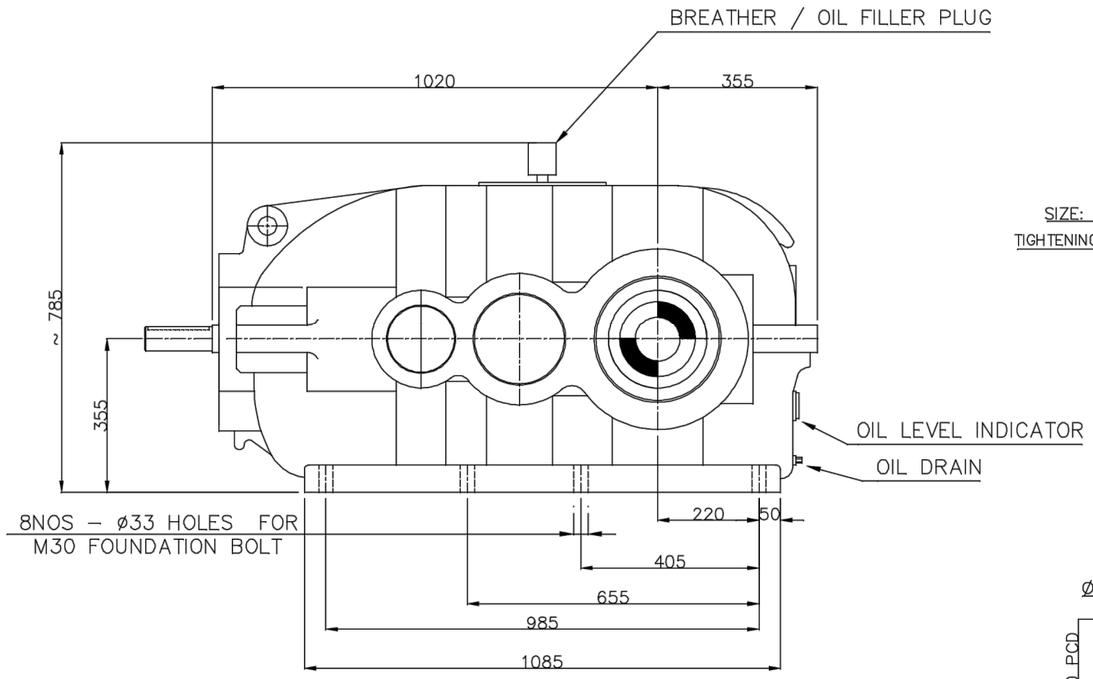

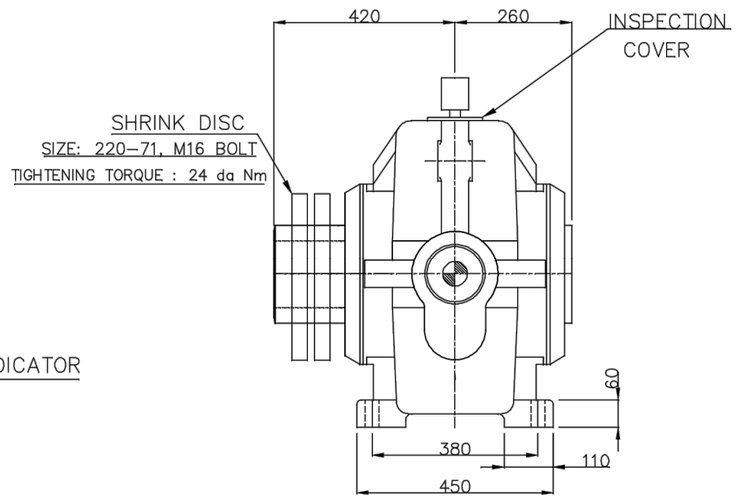

ORDER DETAILS		
CLIENT NAME		M/S– IFFCO–PARADEEP
CLIENT P.O.		–
PROJECT		–
ELECON ENGG. CO. LTD. WORKS ORDER NO.		CO/2281
TECHNICAL DETAIL		
APPLICATION		MAIN SCRAPER BOOM DRIVE
EQUIPMENT		FULL PORTAL RECLAIMER
EQUIPMENT NO.		HM/573 & 574
GEAR BOX TYPE		KCH
SIZE		315
TYPE OF EXECUTION		R.H.
DOR OF OUTPUT SHAFT LOOKING TOWARDS ITS END		REV
POWER	MOTOR	55 KW
	CONSUMED	42.6 kW
INPUT SPEED	n_1	1500 R.P.M.
OUTPUT SPEED	n_2	~ 21.26 R.P.M.
RATIO	NOMINAL	71 : 1
	ACTUAL	70.526
OIL TYPE		MINERAL OIL WITH EP ADDITIVES
OIL QUANTITY Approx		65 LTRS
OIL VISCOSITY		VG 320
WT. OF GEAR BOX WITHOUT OIL Approx		1060 kg
GD^2 VALUE (Relative to Input Shaft)		0.1186 kg–m^2
ORDER QUANTITY		02
MECHANICAL RATING		90 kW
THERMAL RATING OF GB 100% DUTY AT 50°C		98.91 kW
MECHANICAL S.F. ON MOTOR POWER		1.63
THERMAL S.F. ON MOTOR POWER		1.79

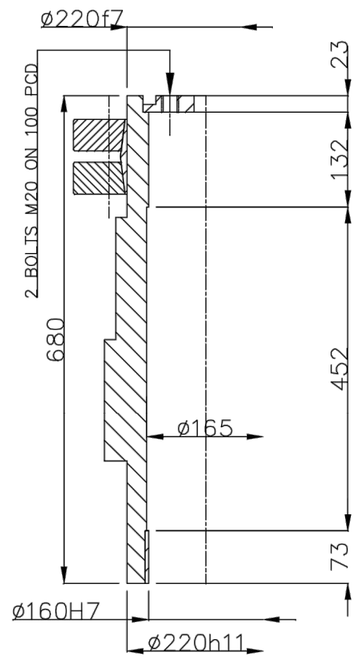

HOLLOW SHAFT DETAIL

SCALE 2:1

ELECON ENGG. CO. LTD.

- ☐ REVIEWED
- ☐ APPROVED
- ☐ APPROVED EXCEPT AS NOTED RESUBMISSION REQUIRED
- ☐ FOR REFERANCE / RECORD

SIGN : R. K. Patel

DATE : 28/08/2012

Any review or approval does not relieve the Vandor from his responsibility for contract compliance, nor quality and performance of his product.

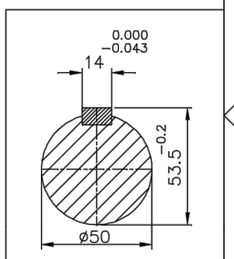

INPUT KEYWAY DETAIL

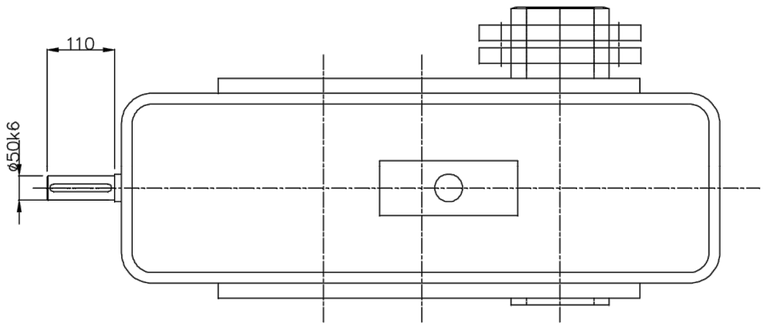

EXECUTION : R.H.

NOTE
SHAFT CENTERING AS PER DIN 332 FORM DS.
KEYS & KEYWAY AS PER DIN6885 PART I
SHAFT END KEYS ARE IN ELECON SCOPE OF SUPPLY.

COMPONENTS	MATERIAL
(1) BREATHER PLUG	GLASS FIBER RAINFORCED PA, basket PP, MAKE : STAUFF
(2) DRAIN PLUG	CARBORN STEEL, AS PER ISO : 898–1
(3) BUSH OF HOLLOW SHAFT	ALLOY STEEL (WITHOUT COPPER)
NOT USE COPPER OR COPPER BASE MATERIAL FOR ANY EXTERNAL COMPONENTS	

ø220h11	+0.000	–0.290
ø220f7	–0.050	–0.096
ø160H7	+0.040	0.000
ø50k6	+0.018	+0.002

Rev.	No. of Rev.	Name	Ammendments	Date

Type of Gear Unit: KCH – 315

Edges are according to ISO 13715

Surface DIN ISO 1302

AllowableTolerance ISO 2768–mK

Tolerance acc. to ISO 8015

	Name	Date
Drawn	HHB	27.08.12
Checked	MSP	27.08.12
Approved	NGP	27.08.12

ELECON

Scale: NTS | Weight: 1060 kg

Material:

Order No :

Title: DIMENSION SHEET

C D : 315 | Ratio: 71 : 1

Drawing-No. 8052003 | Rev. | Sheet of

Modified from: | Superseded from:

(A3) SIZE-420 x 297

IF IN DOUBT ASK

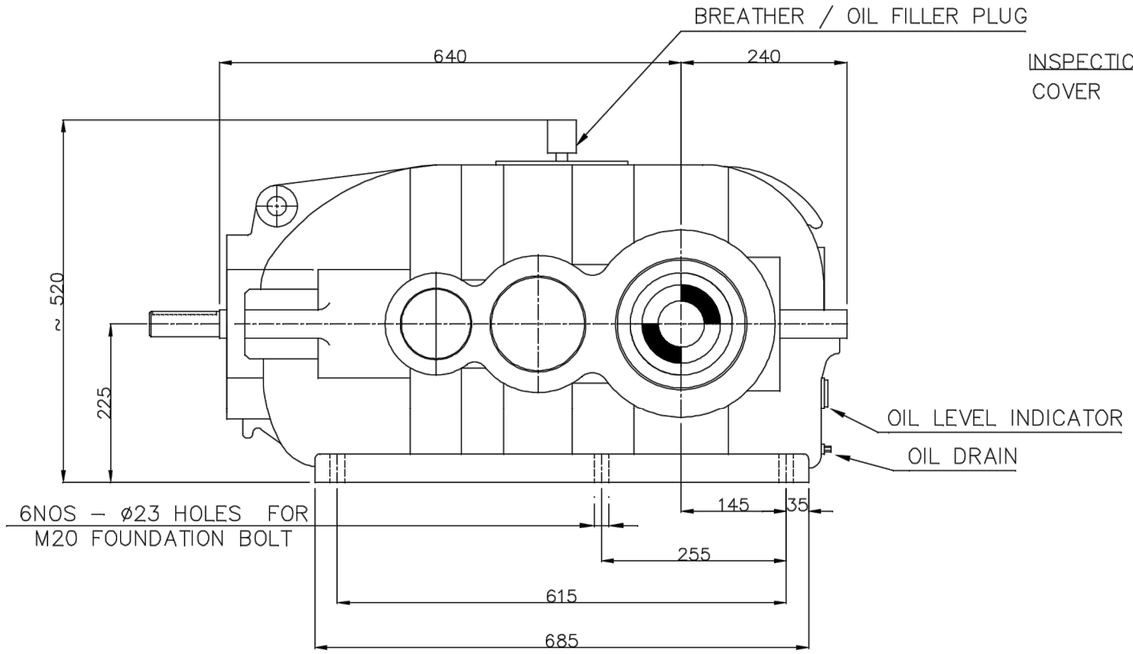

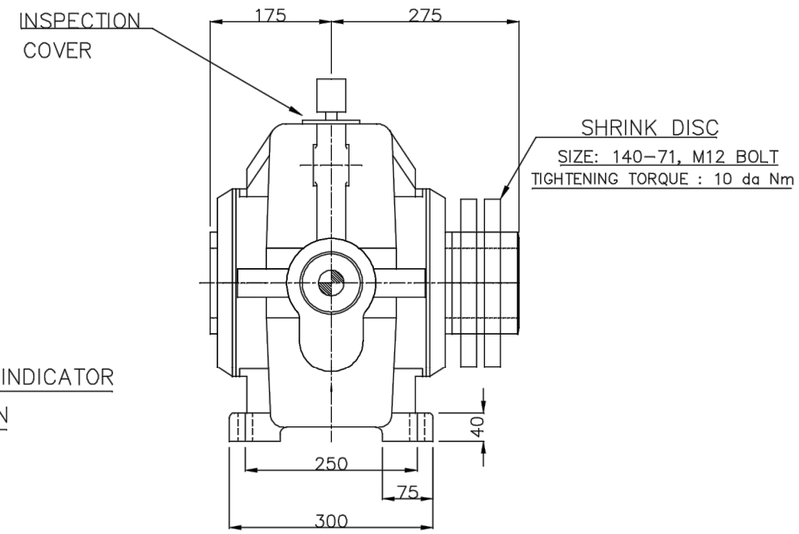

ORDER DETAILS		
CLIENT NAME		M/S– IFFCO–PARADEEP
CLIENT P.O.		–
PROJECT		–
ELECON ENGG. CO. LTD. WORKS ORDER NO. CO/2281		
TECHNICAL DETAIL		
APPLICATION		AUXI. SCRAPER BOOM CONVEYOR DRIVE
EQUIPMENT		FULL PORTAL RECLAIMER
EQUIPMENT NO.		HM/573 & 574
GEAR BOX TYPE		KCH
SIZE		200
TYPE OF EXECUTION		L.H.
DOR OF OUTPUT SHAFT LOOKING TOWARDS ITS END		REV
POWER	MOTOR	30 KW
	CONSUMED	20.796 kW
INPUT SPEED	n_1	1500
OUTPUT SPEED	n_2	~ 52.75 R.P.M.
RATIO	NOMINAL	28 : 1
	ACTUAL	28.431
OIL TYPE		MINERAL OIL WITH EP ADDITIVES
OIL QUANTITY Approx		18 LTRS
OIL VISCOSITY		VG 320
WT. OF GEAR BOX WITHOUT OIL Approx		320 kg
GD^2 VALUE (Relative to Input Shaft)		0.0553 kg–m^2
ORDER QUANTITY		02
MECHANICAL RATING		48 kW
THERMAL RATING OF GB 100% DUTY AT 50°C		40.95 kW
MECHANICAL S.F. ON MOTOR POWER		1.6
THERMAL S.F. ON MOTOR POWER		1.36

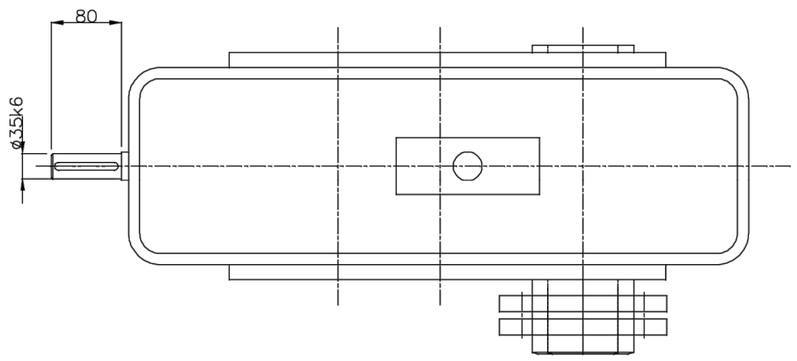

EXECUTION : L.H.

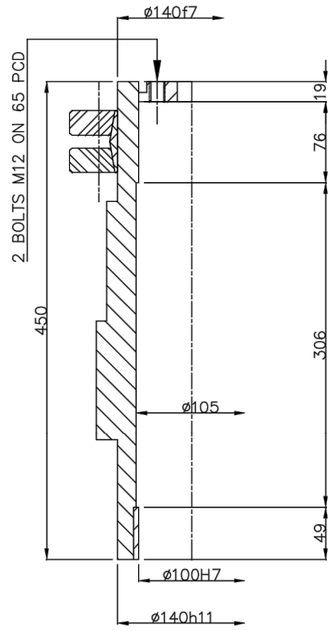

HOLLOW SHAFT DETAIL

SCALE 2:1

ELECON ENGG. CO. LTD.

- ☐ REVIEWED
- ☐ APPROVED
- ☐ APPROVED EXCEPT AS NOTED RESUBMISSION REQUIRED
- ☐ FOR REFERANCE / RECORD

SIGN : R. K. Patel

DATE : 28/08/2012

Any review or approval does not relieve the Vandor from his responsibility for contract compliance, nor quality and performance of his product.

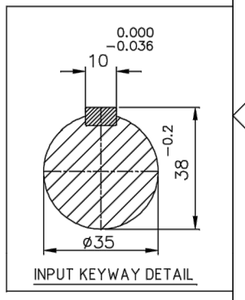

INPUT KEYWAY DETAIL

NOTE
SHAFT CENTERING AS PER DIN 332 FORM DS.
KEYS & KEYWAY AS PER DIN6885 PART I
SHAFT END KEYS ARE IN ELECON SCOPE OF SUPPLY.

COMPONENTS	MATERIAL
(1) BREATHER PLUG	GLASS FIBER RAINFORCED PA, basket PP, MAKE : STAUFF
(2) DRAIN PLUG	CARBORN STEEL, AS PER ISO : 898–1
(3) BUSH OF HOLLOW SHAFT	ALLOY STEEL (WITHOUT COPPER)
NOT USE COPPER OR COPPER BASE MATERIAL FOR ANY EXTERNAL COMPONENTS	

ø140h11	+0.000
	–0.250
ø140f7	–0.043
	–0.083
ø100H7	+0.035
	0.000
ø35k6	+0.018
	+0.002

Rev.	No. of Rev.	Name	Ammendments	Date

Type of Gear Unit

KCH – 200

Edges are according to ISO 13715

Surface DIN ISO 1302

AllowableTolerance ISO 2768–mK

Tolerance acc. to ISO 8015

	Name	Date
Drawn	HHB	27.08.12
Checked	MSP	27.08.12
Approved	NGP	27.08.12

ELECON

Scale: NTS | Weight: 320 kg

Material:

Order No :

Title

DIMENSION SHEET

C D : 200 | Ratio: 28 : 1

Drawing-No. 8052004 | Rev. | Sheet of

Modified from: | Superseded from:

(A3) SIZE-420 x 297

ELECON

HELICAL AND SPIRAL-BEVEL HELICAL GEAR UNITS

Installation Operation and maintenance manual

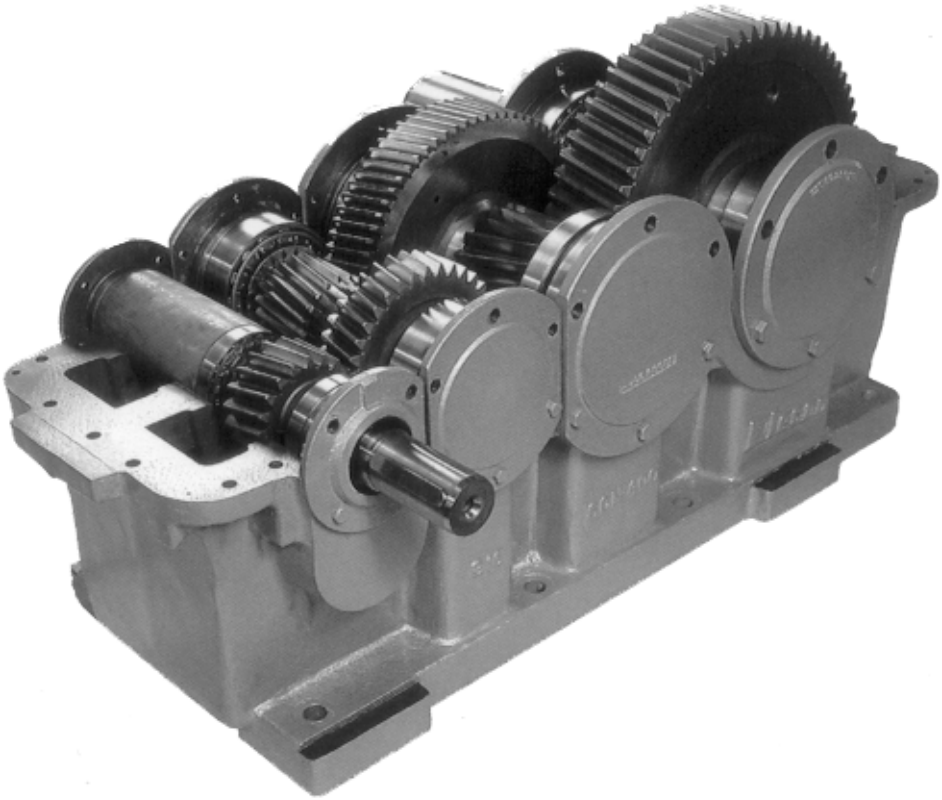

manual No. EW/405/MA/2001

INTRODUCTION

Industries run on gearsÐthe invisible wheels of industrial progress. The ever widening horizon of all-round technological development has imposed new and more exacting demands on the performance of gears. ELECON provides the real answer with a high level of sophistication and accuracy in the design and production of gears.

INSTALLATION OPERATION & MAINTENANCE MANUAL

The proper working of a gear unit not only depends on the good design, the use of good material and good workmanship but also on careful installation, proper lubrication and proper working conditions. Hence, it is of utmost importance to see that the installation of the gear box is done according to the instructions given in this manual to ensure proper working of the gear and to ensure a long and trouble free service.

INSTRUCTIONS FOR LONG STORAGE OF GEAR UNITS

Following instructions for the long time storage of the gear units is of extreme importance as violation of which can lead to the premature failure.

Long time storage of a gear unit can be due to :

i) Unit is not in action, however, installed in the place

or

ii) Unit is kept in store and waiting for its use.

1. THE UNIT IS INSTALLED; BUT NOT IN ACTION :

When the gear unit is installed in the system but is out of action, a quantity of oil must be added to exceed maximum level by 30 mm to 50 mm.

Special attention should be given to the condition of the oil. Old oil which may form a deposit or be acidic should be removed. The gears should be turned slowly by hand at intervals, in order to ensure the oil is distributed over all parts in contact. Wherever grease nipples are provided, add grease through grease nipples.

2. THE UNIT IS TO BE STORED FOR A LONG TIME :

When the unit is to be stored for a long time, it should be run for 5 minutes after filling with a rust protective; say HP RUSTOP 388 or ensues oil. The level of the oil should be about 30 mm to 50 mm higher than the normal oil level.

All the parts having been thoroughly coated with oil, the protective fluid can be drained and kept for other similar operations. The inspection covers and the drain plugs should be completely sealed. On starting up the speed reducer, no special precaution need be taken other than filling the oil bath according to the recommended quantity and quality of lubricant oil.

To prevent corrosion during storage, Silica Gel bags should be kept in the vicinity of gear unit, NOT INSIDE GEAR CASE. Silica Gel should be periodically checked for moisture absorption and be changed from time to time.

GENERAL REMARKS :

a) The inner parts of new units leaving our Works are sprayed with a rust protective oil which keeps them free from rust for 6 months, provided they are sheltered from atmospheric elements, preferably in a closed ventilated place.

When putting into operation, proceed as per instructions of this manual.

b) When storing the units leave them in the cases through which they have been forwarded. Do not put them near vibrating machines, such as reciprocating engines, compressors and pumps in order to avoid wear of bearings by vibration.

c) For a gear box that has to be stored for more than 6 months the gear should be treated as per procedure laid down in para 2, i.e. to run the gear with rust protective for 5 minutes.

1.0 DELIVERY CONDITIONS :

1.1 All gear units are manufactured with highest quality control and keeping the exact specifications in mind. The gears are carefully inspected at various stages and run on the test bed. After all the quality control tests are made, the gear units are sealed and certified for dispatch. The seal on the gear should not be removed without our prior consent. If the same is removed without our consent, it will automatically relieve us from our guarantee.

1.2 Gear units are packed in wooden cases having suitable battens to facilitate handling. Casings are marked with the symbol showing the position of gear unit, inside the casing.

1.3 The gear units are supplied without filling up of oil. Recommended oil has to be filled in before commissioning the unit. Wherever grease lubrication points are provided, the grease filling is done at our Works.

1.4 The instruments like pressure gauges, Temperature gauges etc. which are dispatched loose shall be well protected in store before installation.

2.0 PAINTING AND PRESERVATION :

2.1 The outside surface of the gear casing is painted by us to have resistance against weak acids, alkalizes, solvents and similar liquids and temperature upto + 140^0c (approx.).

2.2 All bright parts such as shaft ends are given a coat of anti-rust compound. Anti-rust compound is easily removable by applying nitro-thinners or suitable solvents. Please do not use files or sand papers for removal of anti-rust coating.

2.3 If the gear unit is required to be stored for a long time before putting into operation, then please follow the instructions given earlier in this manual to prevent premature damage to the gear unit.

3.0 TRANSPORT :

3.1 Transport of the complete gear unit should be undertaken by using wire ropes/cable strips of required strength.

3.2 While lifting the complete gear unit, please do not use the lifting lugs provided on the top cover. Use the lifting lugs provided on bottom part of the gear cases (see fig 1a, 1b, 1c).
Figure 1a gives the correct way.

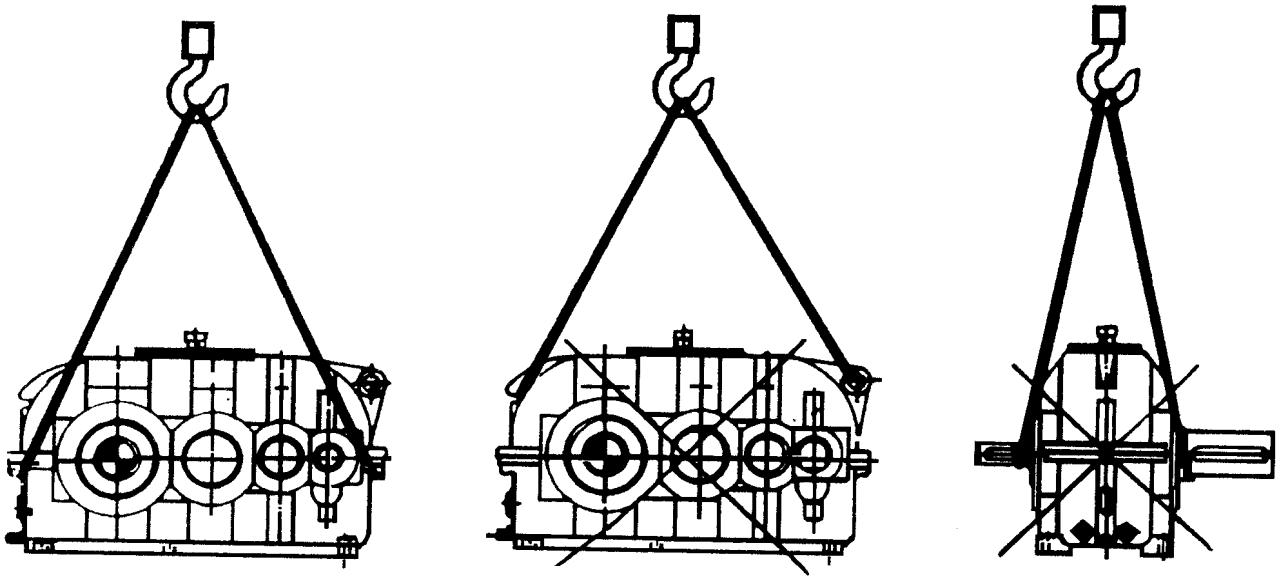

Fig:-1a Fig:- 1b Fig:-1c

3.3 Lift the gear unit which is fitted with lubrication piping carefully in such a way as to avoid any damage to the piping system.

4.0 INSTALLATION :

4.1 Quiet running and long service life of the gear unit largely depend upon correct installation.

4.2 Permissible deviation from the dimension "a" can be checked from the data provided by the coupling manufacturer (see fig. 2a & 2b).

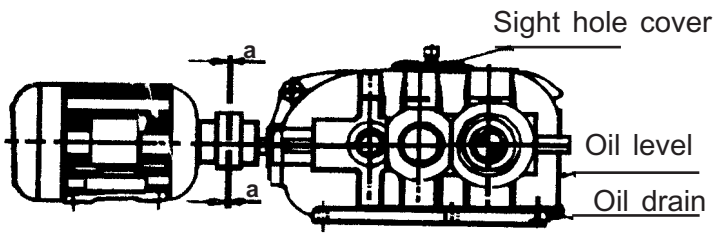

Fig:- 2a

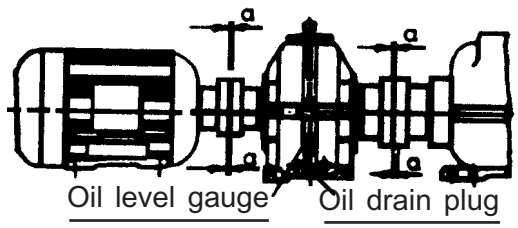

Fig:- 2b

4.3 Installation should be carried out in such a way that inspection cover and drain plugs are readily accessible. Clients are requested to make provision for suitable draining pan below the oil outlet.

4.4 **FOUNDATION :**

The gear unit must be mounted on leveled foundation using the correct size and type of foundation bolts. The foundation must have sufficient load carrying capacity. The foundation must be cast in the proportion like M 150/M 200, with suitable reinforcement. A civil engineer, expert in foundation technology should be consulted for checking suitability of foundation.

4.5 The gear unit can be mounted in an inclined position, see fig. 3a & 3b, only if this requirement is specified while ordering out the gear unit.

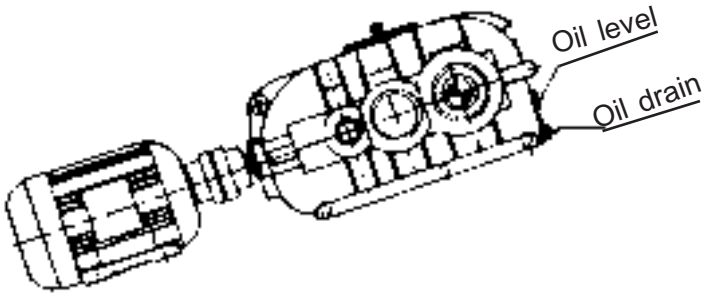

Fig: 3a

Fig: 3b

4.6 While mounting overhung pinions, gear or chain sprockets, care should be taken that as far as possible the reaction due to circumferential forces is directed downward i.e. towards foundation, figures 4a & 5a show the correct way of mounting overhung pinion and sprocket. Avoid installation as shown in figures 4b & 5b.

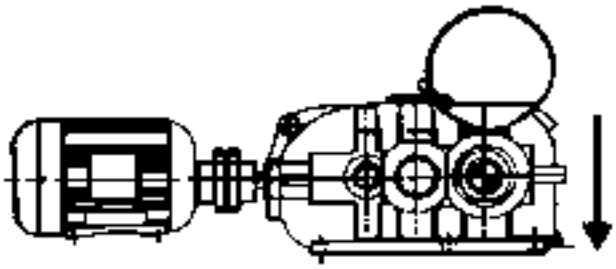

Favourable
Fig: 4a

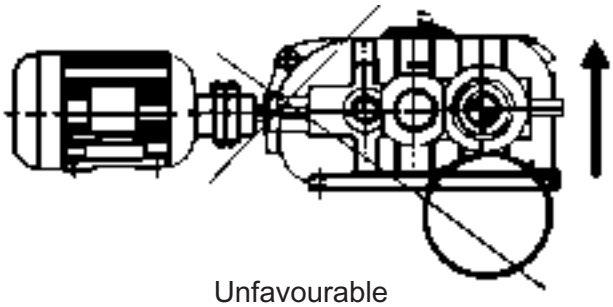

Unfavourable
Fig: 4b

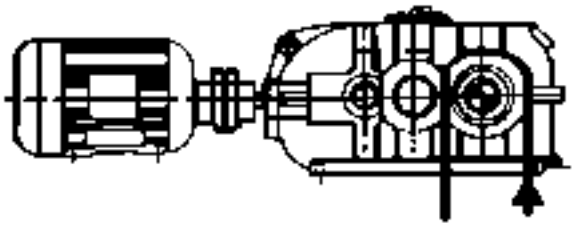

Favourable
Fig: 5a

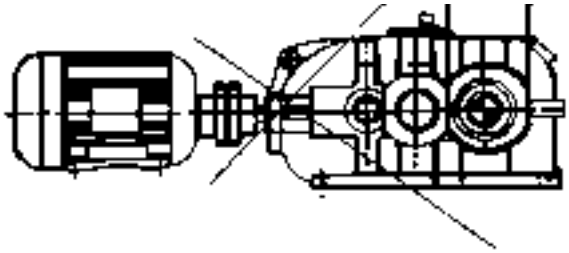

Unfavourable
Fig: 5b

4.7 For shaft mounted gears, provision must be made for the torque arm of adequate strength and elasticity (see fig. 6).

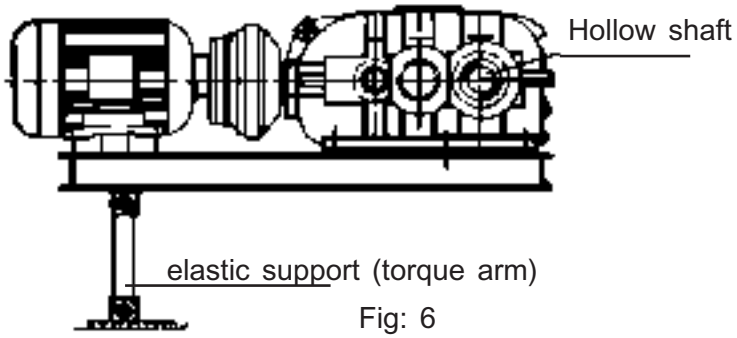

Fig: 6

4.8 Where the gear units are used in outdoor installations, they should be protected from direct sun, wind and rain. During operation, the free air flow along the surface of unit should not be obstructed.

4.9 Wherever the lower parts of the gear casing are provided with an integrally cast and machined leveling seat, while aligning the gear unit with the prime mover and driven equipment, check the horizontal level by means of leveling seats. Correct leveling ensures proper lubrication of bearings (see fig. 7).

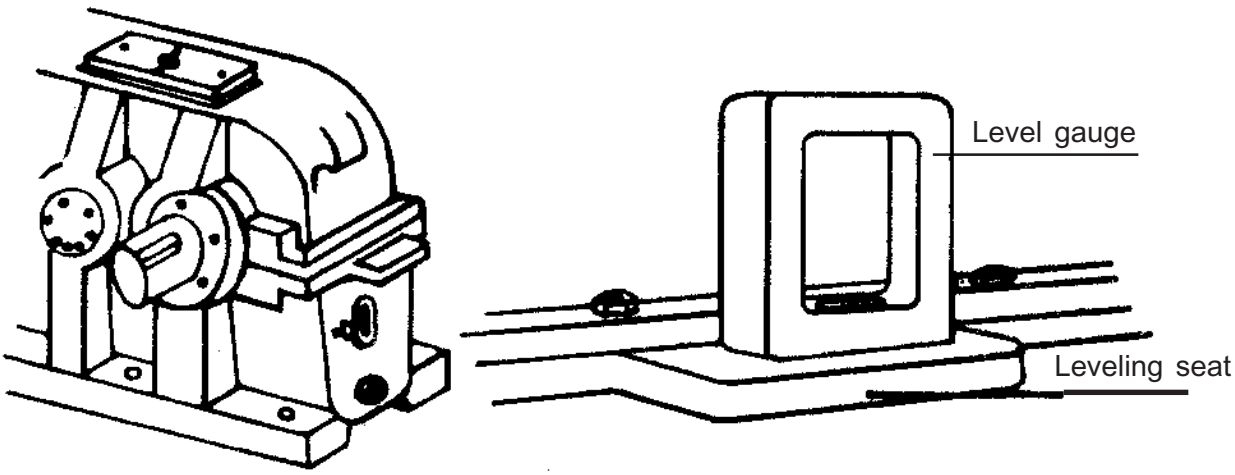

Fig: 7

4.10 After proper alignment tighten the foundation bolts, preferably with the torque wrench to prevent over tightening. Check the level after tightening of the bolts. If the gear unit is mounted on base frame or steel structure, provide the stops to prevent axial and lateral movement of gear due to external forces.

SPECIAL INSTRUCTIONS FOR THE INSTALLATION OF GEAR BOXES ON STRUCTURES :

4.11 The best practice is to install the gear boxes on rigid concrete foundations, however, in some applications the gear boxes are required to be mounted on machinery structures especially in Cement Plants, Chemical Plants etc.

While the gear boxes are installed on structural foundation, care should be taken that gear box is mounted on a combined base frame with driving motor and sufficient access should be there to properly align the input and output couplings.

The most important point is that the supporting structure should be sufficiently strong so that no undue vibrations are generated.

Note that excess vibrations are dangerous to the gear box and may cause premature failure of the gear box.

After levelling and allignment of the gear the no load contact should be checked which should be

a. Up to 80% on uncorrected area for parallel shaft or helical gears.

b. Up to 60 to 70% for spiral bevel gears (50 to 60%).

(If above % of contact is not achieved, same is generally possible by appropriate shimming of the gear box, however same should be under taken by Elecon Service Engineer only).

5.1 COUPLINGÐFITTING :

5.1.1 The input and output shafts of gear units are provided with a tapped hole at the end faces. This facilitates fitting various items like couplings, belt pulleys, sprockets, overhung pinions etc. (see fig. 8a & 8b).

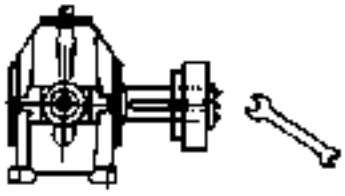

Fig: 8a

Fig: 8b

5.1.2 Wherever it is decided to fit the above items by shrinking or by heating, follow the specifications given by the manufacturer. The care should be taken to protect the oil seals for any damage.

5.1.3 Under no circumstances, couplings or similar items should be mounted by giving heavy blows or impacts. This may cause damage to shafts, bearings, oil seals, etc. (see fig. 8c)

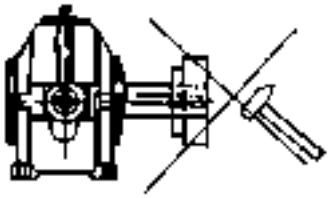

Fig: 8c

5.1.4 In case gear box is provided with 'Radial Fan' for cooling purpose on input shaft, the coupling hub should positively rest on the end face of Fan hub. If shaft extension is in excess, the space should be given in between fan hub and coupling hub.

5.2 COUPLING ALIGNMENT :

In order to minimize wear, vibration and coupling problem, it is a must that the accurate alignment between coupling hubs of connecting shafts is essentially achieved.

5.2.1 Ensure correct gap between two coupling halves.

5.2.2 Check angularity by checking clearance between coupling flanges at four outside positions. Difference between clearances measured at opposite positions should be less than 0.01 mm./100 mm of dia.

5.3 Next, check eccentricity by means of a dial indicator as shown in fig. 9. The reading should be within 0.10 mm. It is important to keep the dial indicator support rigid, otherwise the weight of dial indicator will cause deflection and consequently inaccurate readings will be obtained.

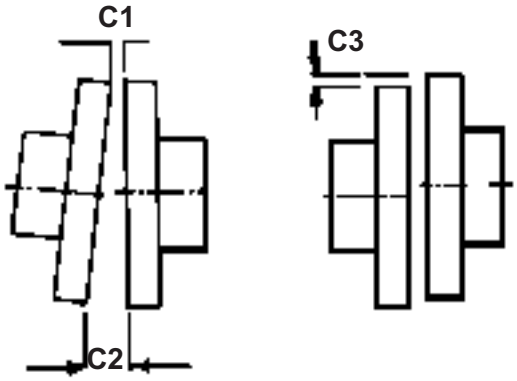

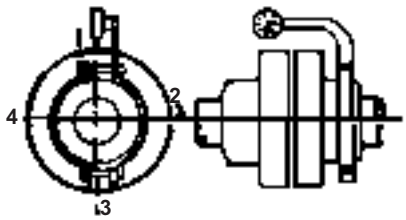

C2ÐC1=0.01 mm./100 mm Dia. **C3 0.05 m.m.** Fig:Ð9

Max. Residual Limit :

Up to 400 rpm = 0.08 mm (TIR)
400 to 1000 rpm = 0.03 to 0.07 (TIR)
1000 to 1500 rpm = 0.03 max (TIR)
1500 to 3500 rpm = 0.02 max. (TIR)

6.0 SAFETY PRECAUTION :

6.1 The client should protect the coupling, rotating shaft extensions etc. with safety guards.

7.0 LUBRICATION :

Reliability, efficiency and wear free operation depend largely on correct lubrication.

7.1 Before commissioning, the gear unit must be filled with lubricating oil upto the oil level mark (see fig. 10).

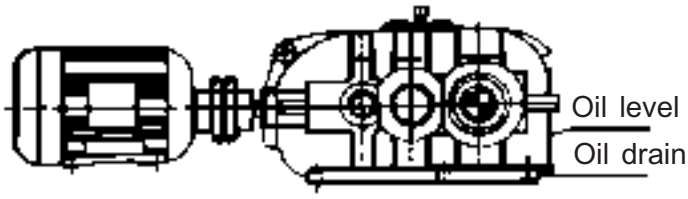

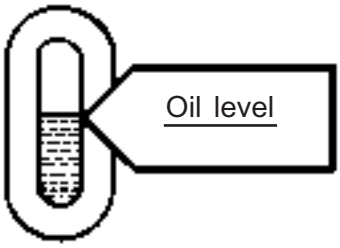

Fig: 10

7.2 Quantity of lubricating oil given in catalogue or in other specifications is only for guidance. The exact quantity should be decided by filling the oil upto the oil level mark.

7.3 Too much oil causes heating of the gear unit and too little oil causes wear.

7.4 In the case of gear units provided with a separate oil tank, specified quantity of oil should be maintained in the oil tank.

7.5 The lubrication oil should be poured into the gear unit through the inspection opening (see fig. 11). Use only fresh and unadulterated oil filtered through mesh of 150 micron. New jointing must be applied everytime the inspection cover is opened.

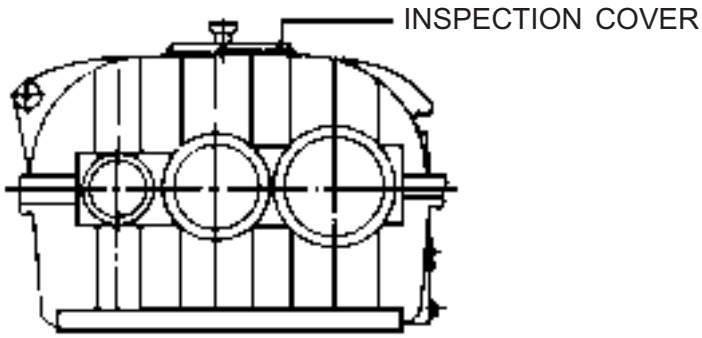

Fig: 11

7.6 The oil level must be checked from time to time and maintained strictly as per the given oil level mark.

7.7 The bearings are generally lubricated with the oil used for gears, unless they are provided with grease lubrication under specific operating conditions.

8.0 SELECTION OF LUBRICANTS :

8.1 The class of lubricants is indicated on page-14. The class of lubricants states which oil or grease should be used under specific operating conditions.

8.2 In case of extreme temperature fluctuations from 0 to Ð30ºc, special type of oil is necessary. Client should obtain the exact operating temperature to determine the correct lubricant.

8.3 In case of low ambient temperature, oil heating is necessary and where the ambient temperature is too high, oil cooling has to be provided. Hence, client should inform us the ambient temperature at the time of placing order.

9.0 FORCED LUBRICATION SYSTEM :

9.1 Forced Lubrication System is employed to enhance the thermal rating of the gear unit and when the gear unit is operating at very low speeds, the splashing in the gear unit is not sufficient to lubricate the gear internals and the bearings as well when peripheral velocity of gear internals is more than 15 m/sec. 9.2 to 9.6 gives general information about components of F.L.S., however for specific details such as L.P.M. of pump, quantity of water circulation in oil cooler, refer separate manufacturing/schematic drawing for FLS. h/w enclosed.

A TYPICAL LAYOUT SHOWING FORCED LUBRICATION SYSTEM

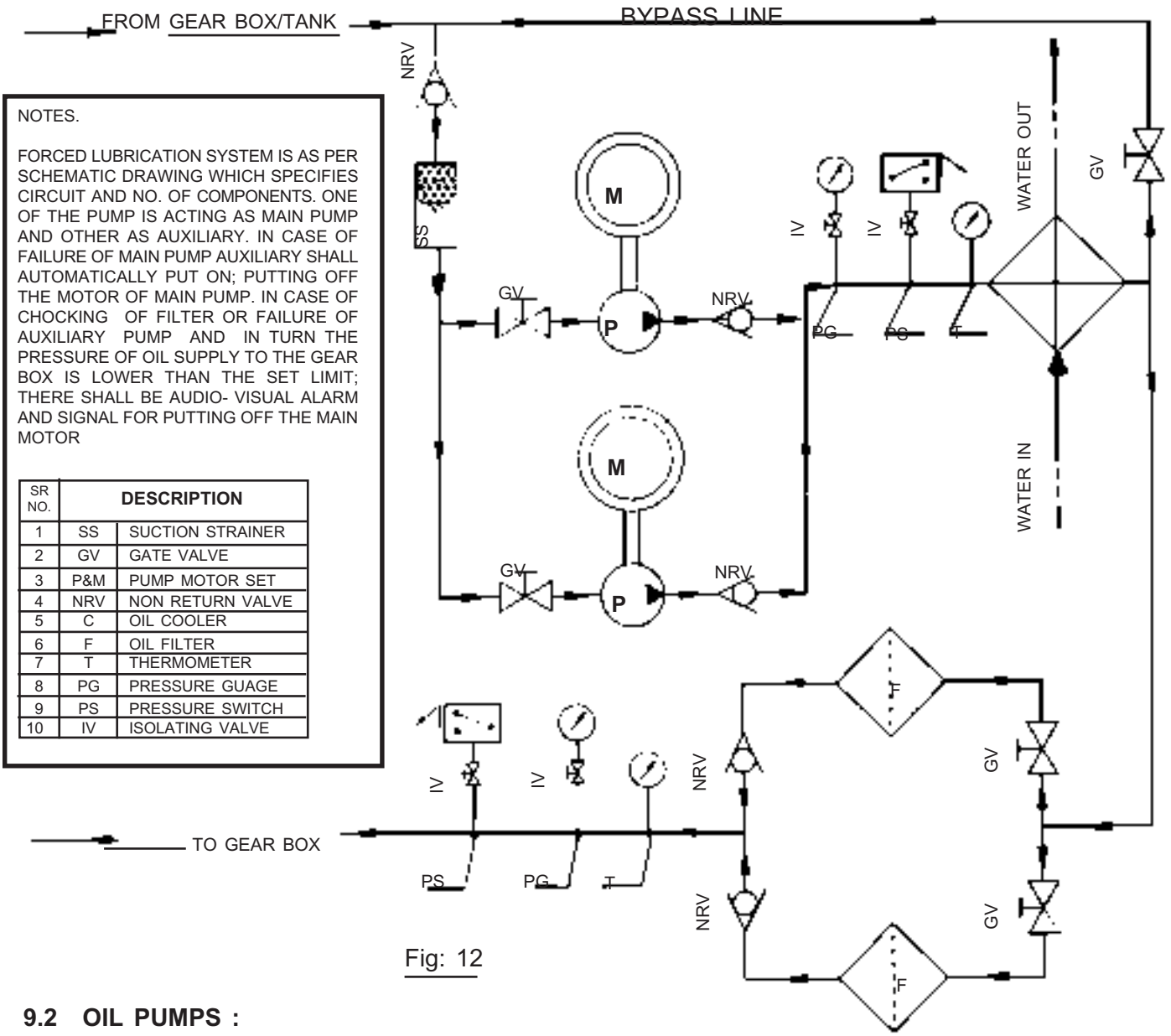

NOTES.

FORCED LUBRICATION SYSTEM IS AS PER SCHEMATIC DRAWING WHICH SPECIFIES CIRCUIT AND NO. OF COMPONENTS. ONE OF THE PUMP IS ACTING AS MAIN PUMP AND OTHER AS AUXILIARY. IN CASE OF FAILURE OF MAIN PUMP AUXILIARY SHALL AUTOMATICALLY PUT ON; PUTTING OFF THE MOTOR OF MAIN PUMP. IN CASE OF CHOCKING OF FILTER OR FAILURE OF AUXILIARY PUMP AND IN TURN THE PRESSURE OF OIL SUPPLY TO THE GEAR BOX IS LOWER THAN THE SET LIMIT; THERE SHALL BE AUDIO- VISUAL ALARM AND SIGNAL FOR PUTTING OFF THE MAIN MOTOR

SR NO.	DESCRIPTION	
1	SS	SUCTION STRAINER
2	GV	GATE VALVE
3	P&M	PUMP MOTOR SET
4	NRV	NON RETURN VALVE
5	C	OIL COOLER
6	F	OIL FILTER
7	T	THERMOMETER
8	PG	PRESSURE GUAGE
9	PS	PRESSURE SWITCH
10	IV	ISOLATING VALVE

Fig: 12

9.2 OIL PUMPS :

9.2.1 Oil pumps generally are of positive displacement type. They are either electric motor driven pumps or mounted directly to the gear unit. Oil pumps generally are geared type having sufficient capacity for flow rate and delivery pressure.

9.2.2 The recommended oil pressure during operation is 0.8 to 2 kg/cm^2 gauge. For shaft mounted pump the recommended pressure during operation is 0.5 to 2kg/cm^2

9.2.3 Oil pressure and flow rate of the gear type lubricating pumps are controlled by adjusting the relief valve and the gate valve provided in the delivery line.

9.2.4 In order to ensure that the gear unit does not start before the lubricating pump starts functioning, an interlocking should be done with the main motor and the motor driving the pump, the local control panel supplied alongwith FLS has this facility which should be used.

9.2.5 As a rule, pressure regulation is not required for built-in oil pumps (i.e. directly mounted pumps).

DO NOT DISMENTALE THEM AND THEIR FITTINGS.

9.3 COOLING COILS :

9.3.1 Whenever cooling coils are provided inside the gear box customer should make provision for water connection as per specification. Direction of water flow can be in either direction. Maximum water pressure allowed is 8 kg/cm^2.

9.3.2 Water should be regulated through suitable valves.

9.3.3 Provision for water connection is to be made by the customer.

9.3.4 Where there is a likelihood of frost formation, when the unit is out of operation for a long period, cooling water must be drained off. To clear any residual water, use compressed air.

FOR PROPER INSTALLATION / FITMENT OF COOLING COIL REFER PROCEDURE / SKETCH UNDER - APPENDIX -

9.4 OIL FILTER :

9.4.1 The oil filter is provided in the lubricating system to trap foreign particles from the lubricating oil and this prevents damage to the gear unit.

9.4.2 Filter elements are having fine meshing and should be cleaned for the first time after 2 hours operation and then after 12 hours. After ensuring that filter elements do not carry any foreign particles, the further cleaning be done periodically once in a week or so.

9.4.3 Filter elements should be cleaned with petrol.

9.4.4. Pressure drops across the oil filter in case the filter elements are choked. This should be attended to as soon as it is noticed.

9.5 OIL COOLERS :

9.5.1 Oil cooler should be fitted and water connection should be provided as per the drawing supplied by us. Direction of water flow should be as per markings shown in the drawing. The maximum water pressure allowed is 8 kg/cm^2. The oil cooler should be periodically cleaned.

9.5.2 The oil cooler should be provided with fresh water of lowest possible lime content.

9.5.3 Water content in the oil cooler must be drained out when there is likelihood of frost formation or when the gear unit is out of operation for a long time.

9.6 OIL TANK :

Normally the gear box bottom casing acts as a reservoir, from where oil pumps sucks the oil, however for smaller gear boxes separate oil tank is provided as part of FLS in which case oil level should be maintained in this tank and not in gear box, before starting of FLS.

NOTE

Alongwith FLS instruments like pressure switches, flow switches, RTDs are provided as agreed in Technical Specification of the order. Their position and set points are stipulated on the manufacturing drawing for the FLS schematic drawing for FLS dispatched separately. The details of Local Control Panels, when provided along with it's wiring diagram are given on LCP drawing dispatched separately.

For any clarification regarding oil pumps, coolers and filters, specific information sheet for the above must be referred to.

10.0 COMMISSIONING :

10.1 CHECKING BEFORE STARTING :

Please make following inspections before operating the unit.

10.1.1 First check the atmospheric conditions at the installation site. Excessive dust or dirt, moisture, chemical contaminants, high or low ambient temperature, extreme weather conditions may affect the operation of the unit.

10.1.2 Please see that no foreign matter or moisture has entered the reducer casing through inspection cover or other opening.

10.1.3 Please see that rust-preventives are removed from all external parts. Keep the breather cleaned and free from obstruction.

10.1.4 Check for free rotation of the shafts.

10.1.5 Check for proper alignment and foundation bolt tightness.

10.1.6 Check the oil pump or lubrication system for exact type and quantity of oil.

10.1.7 Check that piping and wiring of accessories are complete.

10.1.8 Check that the lubrication system is pre-fitted to minimise time of build up of positive oil pressure. When oil pressure is available from an electric driven pump, operation of the spray jets should be checked, through inspection covers wherever applicable.

The gear boxes provided with the Forced Lubrication System and installed in the dusty atmosphere, like cement plant, chemical plant etc., it is observed that foreign particles enter into the lubrication system and choke up the pipe-lines. Hence before commissioning it must be ensured that all the pipe-lines and nozzles, leading the oil spray to the pinion and gear mesh as well as to the bearing, are thoroughly cleaned. It is necessary that the spray condition and oil supply condition should be periodically checked. The spray of oil should fall exactly on the meshing point especially for outward running gears.

10.1.9 Check for proper rotation of the oil pump.

10.1.10 Check the setting of the pressure switch.

10.2 TRIAL RUNNING :

10.2.1 After installation and checking, please keep following points in mind :

10.2.2 During the trial run of the reducer, put unit into no-load operation by connecting the motor and the gear unit. To ensure smooth operation and long life, CONTINUE NO LOAD OPERATION FOR MORE THAN 3 HOURS. During this period, the gear unit and driven machine must be disconnected.

10.2.3 Run unit at no-load after connecting the gear unit and the driven machine. **It is important to increase the load gradually without applying full load initially. Test run with no-load for 12 hours, $^1/_4$ load for more than 48 hours and with $^1/_2$ load for more than 48 hours. Then operate with 66% load for 48 hours minimum and then take full load.**

Special note for bigger sizes (560 and above) gear boxes or special gear boxes where profile and longitudinal correction are undertaken

Normally ELECON undertake profile and longitudinal correction on the pinion profiles of these gears, depending on the loading condition and type of gear Ð speed reducing or increasing.

This necessitates check of dynamic tooth rub-off. Following procedure to be followed :

a) Apply Dye-chem Red or equivalent paint lacquer on complete length of gear tooth profile for two consecutive teeth at 3 or 4 places equidistant from each other. (This paint is quick - drying and once applied shall not get removed by oil or it's spray. However, after removal by pressure of pinion tooth, it is not harmful for lubrication when mixed in oil).

b) After loading of gear box, this paint shall get removed by tooth contact pressure under dynamic condition.

c) Observe and record this dynamic tooth rub-off for each % loading. At 100% load there should be a rub-off of 80 to 90% of the total tooth profile are Typical case of recommended dynamic tooth rub-off is shown below

Fig.

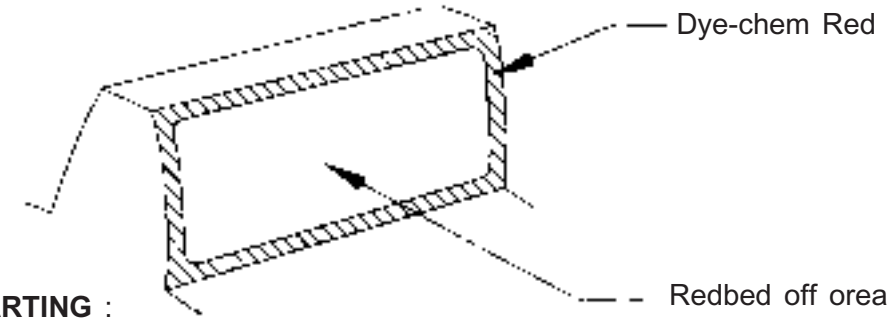

10.3 CHECKING AFTER STARTING :

10.3.1 Check vibration, unusual noise, oil leakage and record temperature every 15 minutes (wherever applicable), during commissioning.

10.3.2 check operation of oil pressure relief valve. Normal oil pressure is 0.8 to 2 kg/cm^2.

10.3.3 Check tightness of all parts after load running.

10.4 Maximum oil and bearing operating temperature is 93°C when using specific lubricants. If the operating temperature is observed above 93°C, consult us.

11.0 OIL CHANGE :

11.1 The first oil change after about 200 working hours.

11.2 Subsequent oil changes must be made after every 1500 to 5000 operating hours, depending on working conditions. The oil change intervals should, however, not exceed 18 months.

11.3 If possible, the oil should be drained warm.

12.0 Where the gear unit has to be stored for a long time, consult us in advance for advice and to enable us to give a special treatment before dispatch, for storing the gear unit for a longer time.

13.0 PART IDENTIFICATION & SPARES :

13.1 Typical cross section general arrangement drawing is given in this manual to identify the parts.

13.2 The client should order out necessary spares well in time to minimize-stoppage time.

14.0 INTERPRETATION :

Wherever any difficulty arises in interpreting meaning of any of the terms, kindly consult us.

LUBRICANTS CHART FOR ELECON GEAR UNITS

Lubricant Manufacturer 68	LUBRICANT GROUP					
	114	169	225	WF	GF	
ISO VG mm2/s at 40 °C	150	220	3 20	4 50		
c St/50°C	68	114	169	225		
°E/50°C	9	15	22	30		
S AE	80	90	ÐÐ	ÐÐ		
Din 51502	C-LP 68	C-LP 114	C-LP 169	CÐLP 225	K2k	GÐPOOe
Castrol	Castrol Alpha SP 150	Castrol Alpha SP 220	Castrol Alpha 320	Castrol Alpha SP 460	Ball Bearing Grease LM (all purpose)	Ball Bearing Grease LM (All purpose)
Bharat Petroleum	Bharat Amocam O il 1 50	Bharat Amocam O il 2 20	Bharat Amocam O il 3 20	Bharat Amocam O il 4 60	Bharat MP Grease 2	ÐÐ
Indian Oil	Servomesh SP 150	Servomesh SP 220	Servomesh SP 320	Servomesh SP 460	Servo Gem 2	ÐÐ
Hindustan Petroleum	Parthan EP-150`	Parthan EP-220	Parthan EP-320	Parthan EP-460	ÐÐ	ÐÐ

Note: Ñ Do not add molybdenumdisulfide (MoS_2) to the oil without previous consultation.

Use oil as per group 169 for all standard Durunorm gear boxes unless otherwise stated.
Addition of ptee based lube oil Additives in oil
e.g. FIN-25 of Interflon or equivalent (8 to 10% by weight-max.) is Permitted

Annexure - I

PROCEDURE FOR ADJUSTMANT OF SPIRAL BEVEL PAIRS IN ASSEMBLY

(Refer arrgt. Sketch shown below the text)

Prepare the sub-assemblies as per the drawing with bearings, distance pieces and internals.

Debur clean the gearcase (1), Sub-assemblies thoroughly.

Normally sub-assemblies are with taper roller bearings (2),instead of covers (3) side clamps are to be fitted on sides of input and spiral bevel wheel assembly bore during adjustment.

Put the bevel pinion (4) and spiral bevel wheel (5) sub-assemblies as per the handling required and match the face width of both the pinion and wheel by moving the sub-assemblies with screws provided on side clamps during which dummy spacer ring (6) is to be inserted between locating ring (7) and pair bearing (2) outer race of the bevel pinion assembly.

Ensure that there will be sufficient backlash so that both the assemblies rotate smoothly.

Now apply Mechanics blue on bevel pinion teeth on profile of 4 to 5 teeth and rotate to get the contact on mating spiral wheel

If the contact pattern is not as per the lapping contact (i.e. about 45 to 50 % of tooth flank starting from the 'toe' side of spiral bevel pairs), move the bevel pinion axially to and fro, by removing or adding dummy spacer ring (6) till proper contact is achieved. Then adjust the backlash by moving spiral bevel wheel assembly in or out as per the standard (Use enclosed recommended values) and also take the dimension of the dummy spacer ring (6). After making a new ring insert this in position in two pieces.

Under this condition, take the spigot dimensions for input and spiral bevel wheel assembly with ' zero' clearance. After machining the cover spigots for the covers and once again check, contact, backlash and axial clearance.

GUDELINES FOR BACKLASH RELATIVE TO NORMAL MODULE FOR SPIRAL BEVEL

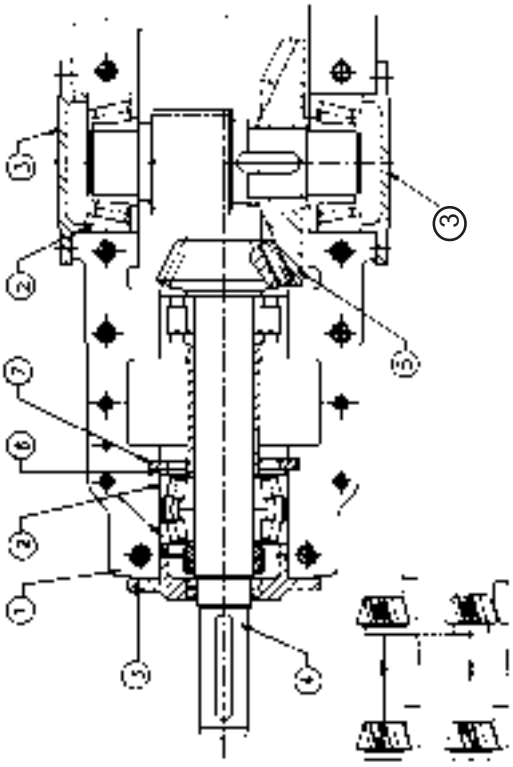

MODULE Mn	BACKLASH (mm)
0.3-1.0	0.03 - 0.06
1	0.06 -0.08
2	0.08 - 0.11
3	0.10 - 0.13
4	0.12 - 0.14
5	0.14 - 0.17
6	0.15 - 0.18
7	0.16 -0.19
8	0.18 - 0.20
8 - 10	0.20 - 0.25
10 - 12	0.25 - 0.30
12 - 14	0.30 - 0.35
14 - 16	0.35 - 0.40
16 - 18	0.40 - 0.45
18 - 21	0.45 - 0.50

NOTES :- -

Care should be taken, that backlash is checked and set at different places at the circumference of the gears.

Annexure - II

PROCEDURE FOR FITTING HOLDBACKS AT SITE

(Refer Arrgt. Sketch shown below the text)

Confirm the direction of rotation of the shaft on which holdback is to be fitted with mark (View in the direction of arrow to decide sense of rotation)

Check the length of the seating dia. of shaft (2) and width of the spider (5) which should be equal so that circlip should seat properly in the groove after fitting the spider in position.

Check the concentricity of the adaptor plate (3) spigot, on which outer ring (8) of the holdback fits, with reference to pinion shaft extension, on which spider (5) of holdback fits, with help of a dial gauge which should be within 0.05 mm.

Fit the key (4) in position on shaft extension after removing the burrs.

Fit the spider (5) on the shaft (2) with a slight hammer fit according to the direction of rotation required.

See the spider (5) is not fouling with adaptor plate (3) when spider is fully resting on the shaft (2) step.

If distance piece (10) is coming in between spider and bearing same is to be adjusted before fitting by checking the dimensions from bearing and circlip groove and total width of the spider.

Fill the grease EP2 in the spider sprags (7)

Slide the outer ring (8) of the holdback on to the spider (5) in such a way that all the sprags (7) of spider (5) should be in its inner most position which can be achieved either by slightly rotating the outer ring on spider while pushing inside or by wrapping and tightening a thin wire on spider periphery.

Slide outer ring (8) on to the spigot of adaptor plate (3), fill the grease once again and fit the end cover (9) and all the screws (6) by matching the holes of end cover (9), outer ring (8) and adaptor plate (3).

Confirm for the free rotation of holdback by rotating the input shaft according to the direction of rotation required.

Run the gear box on no load for 4 hours during which check the noise and temperature or any abnormalities in holdback and gear box.

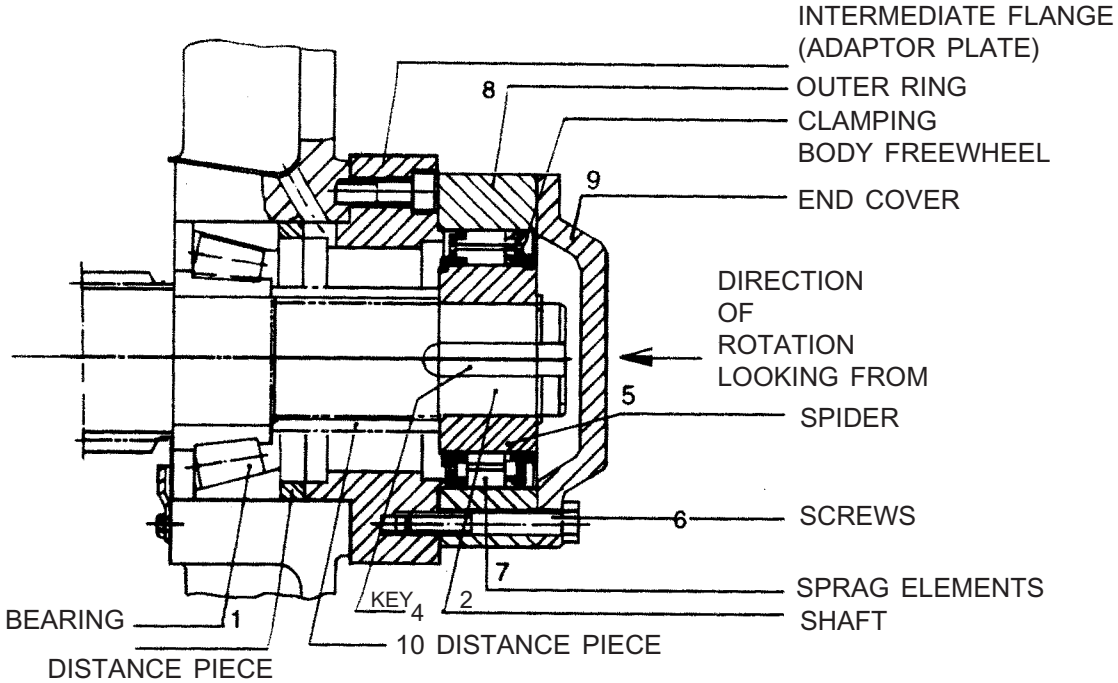

Annexure : III

PROCEDURE FOR FITTING & TESTING OF COOLING COILS IN HELICAL GEARS.

Cooling coil assembly consists of cooling coil, 'O' Ring, washer and nuts. (Refer neighboring Figure)

1. Check the leakages by passing the water through the coil outside itself before fitment to ensure any welding leakages or any other defect.
2. Insert the cooling coil(2) in the gear box sump (1) and see that the flange (8) resetting faces of the cooling coil inlet and outlet is properly seated on the inner surface of the gear box wall. Also ensure that the gear box wall is flat where the cooling coil rests.
3. From outside, insert the 'O' ring (5) on to the inlet, outlet pipe OD should rest the 'O' ring (5) on to the chamfer provided on the gear box wall; then mount the washer (14) and tighten the nut (6) fully with locktite solution. (Lock tight - 574 manufactured by FIT/TIGHT Chemicals Pvt Ltd.. or equivalent can be used.)
4. Put the sub assembly of gears internals (9) and ensure that no rotating internals (9) are fouling coil. (2)
5. Remove the internals. (9)
6. Pass the water through the cooling coil at a pressure 5 Kg/cm2 for hydrostatic testing to ensure no leakages.
7. Fill up oil till the cooling coil is submerged and also ensure no leakages through the 'O' ring.
8. Drain the oil, clamp the cooling coil inside the sump suitably.

Caution : The lock nut should not be loosened, once the cooling coil is fitted and tested as above.

1. GEAR CASE
2. COOLING COIL
3. NIPPLE
4. WASHER
5. 'O' RING
6. HEX. NUTS.
7. PLASTIC CAP.
8. SUPPORTING PLATE
9. GEAR INTERNALS.

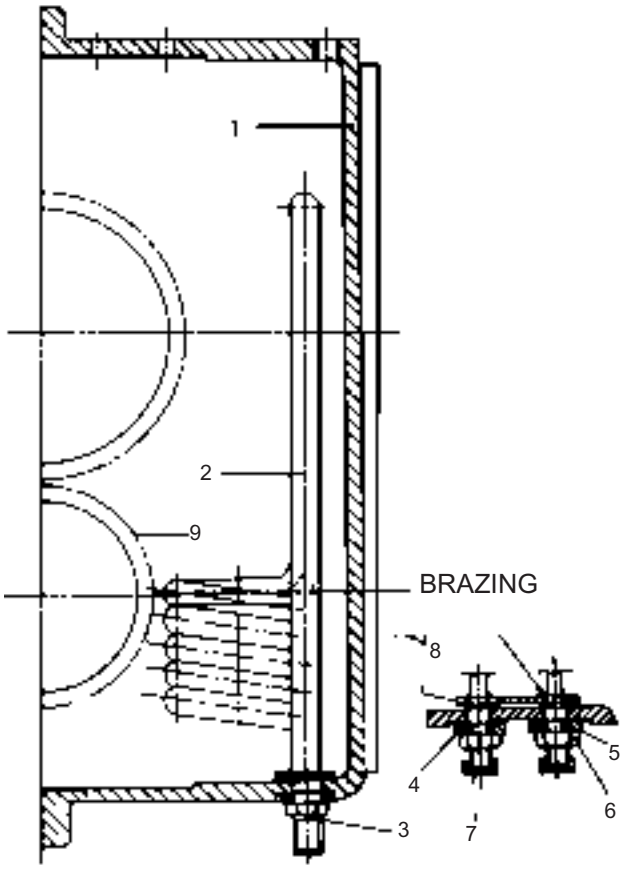

Annexure - IV

FLUSHING PROCEDURE :

It is always desirable to undertake a schedule of flushing the gear unit and the internal piping of the gear unit which is connected to the Force Lubrication System. The flushing is nothing but circulating in and out the flushing oil in the gear unit and piping under recommended pressure, which is normally 2 to 3 Kg/cm^2. For flushing the light low viscosity oil such as " LUBREX FLUSHING 22 " of Indian Oil or equivalent (Dynamic viscosity = 19-22 Cst at 40^0 C) should be used.

For flushing purpose the Force Lubrication System can be used for pumping the flushing oil through the pipes and the casing. While flushing, the terminal flanges of FLS should be fitted with wire mesh of sizes 250, 150, 60 Microns; one schedule after another.

At the end of each schedule (Normally of 8 Hours) there should not be any accumulation dirt on the wire meshes employed in the terminal flanges which can be observed every 2/3 hours of flushing.

WHEN FORCE LUBRICATION SYSTEM IS NOT SUPPLIED ALONGWITH GEAR BOX, A SEPARATE PUMPING ARRANGEMENT NEEDS TO BE EMPLOYED FOR FLUSHING PURPOSE.

HELICAL GEAR TYPE : SAN

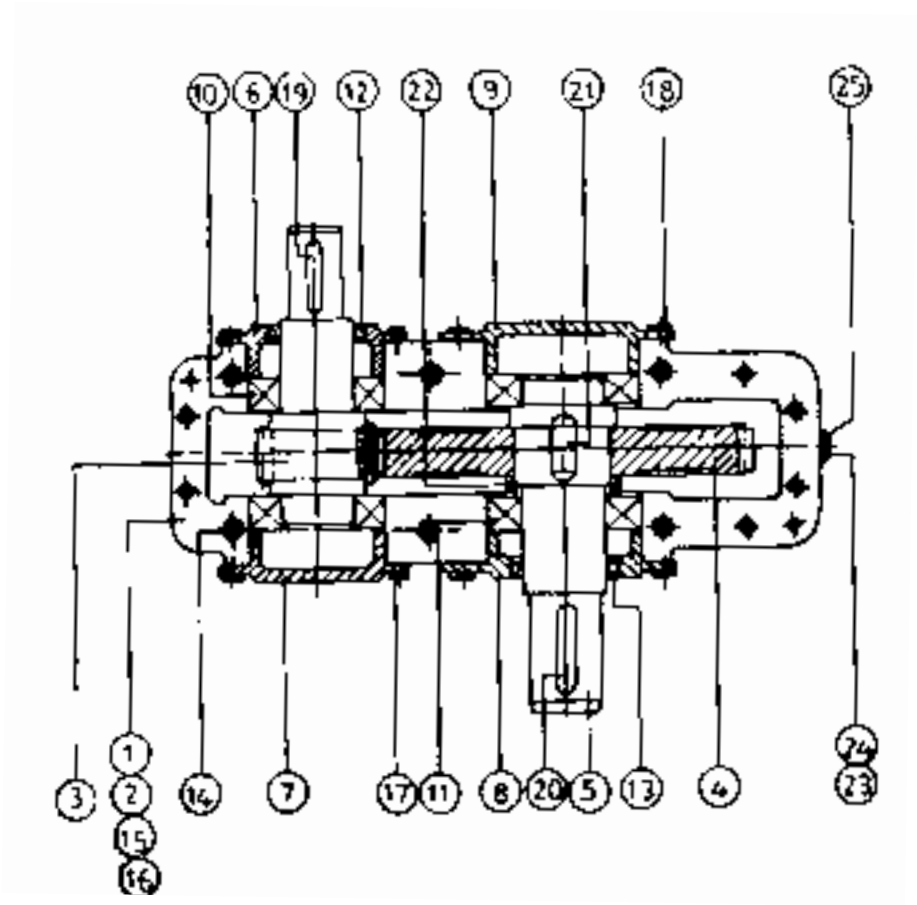

PART LIST SAN

1. Gear Case top
2. Gear Case bottom
3. Input pinion
4. Output wheel
5. Output shaft
6. Open cover
7. Blank cover
8. Open cover
9. Blank cover
10. Input bearing
11. Output bearing
12. Oil seal (input)
13. Oil seal (output)
14. Hex. head bolt
15. Inspection cover
16. Breather plug
17. Hex. head screw
18. Hex. head screw
19. Key for input pinion
20. Key for output shaft
21. Key for output shaft
22. Distance piece
23. Oil level indicator
24. Oil level marker
25. Drain plug

HELICAL GEAR TYPE : SBN

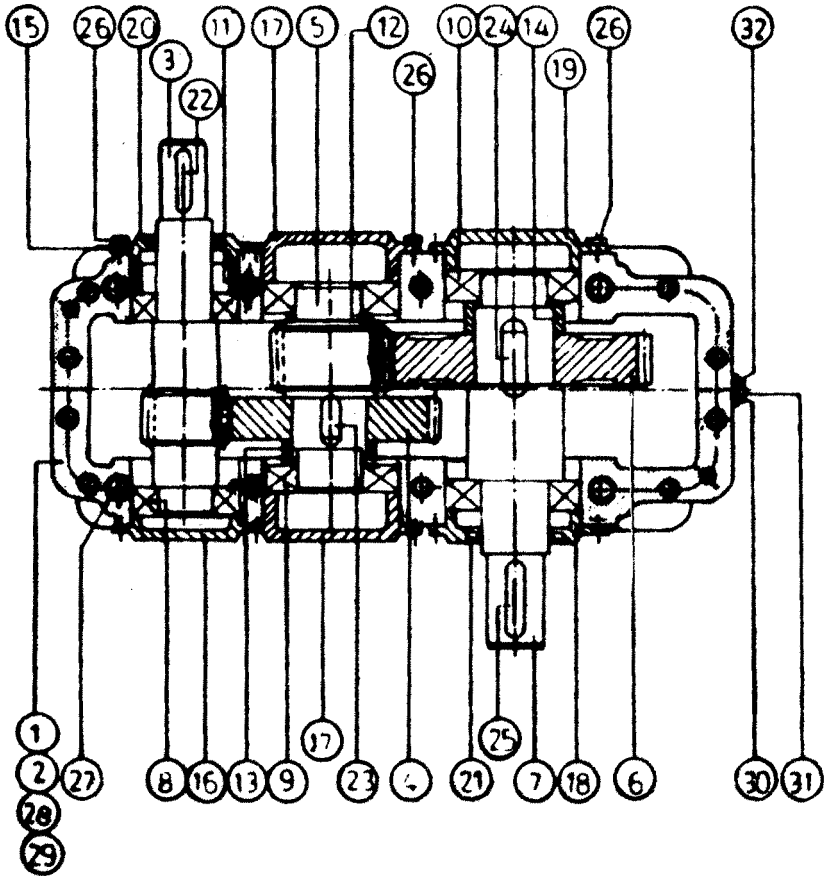

PART LIST SBN

1.	Gear Case top	17	Blank cover
2.	Gear Case bottom	18	Open cover
3.	Input pinion	19	Blank cover
4.	Intermediate wheel	20	Oil seal (Input)
5.	Intermediate pinion	21	Oil seal (output)
6.	Output wheel	22	Key for input pinion
7.	Output shaft	23	Key for int. mdt. pinion
8.	Input bearing	24	Key for output shaft
9.	intermediate bearing	25	Key for output shaft
10.	Output bearing	26	Hex. head screw
11.	Distance ring	27	Hex. head bolt
12.	Distance piece	28	Inspection cover
13.	Distance piece	29	Breather plug
14.	Distance piece	30	Oil level indicator
15.	Open cover	31	Oil level marker
16.	Blank cover	32	Drain Plug

HELICAL GEAR TYPE : SCN

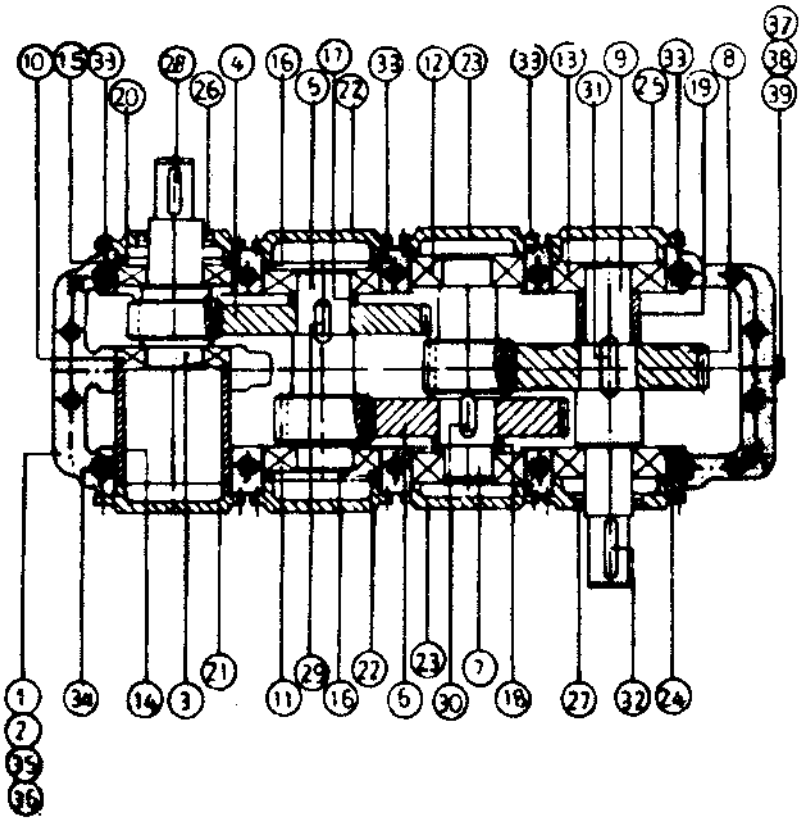

PART LIST SCN

1	Gear Case top	21	Blank cover
2	Gear Case bottom	22	Blank cover
3	Input pinion	23	Blank cover
4	1st Intermediate wheel	24	Open cover
5	1st Intermediate pinion	25	Blank cover
6	2nd intermediate wheel	26	Oil seal (input)
7	2nd intermediate pinion	27	Oil seal (output)
8	Output wheel	28	Key for input pinion
9	Output shaft	29	Key for 1st int. mdt. pinion
10	Input bearing	30	Key for 2nd int. mdt. pinion
11	1st intermediate bearing	31	Key for output shaft
12	2nd intermediate bearing	32	Key for output shaft (extn.)
13	Output bearing	33	Hex. head screw
14	Distance ring	34	Hex. head bolt
15	Distance ring	35	Inspection cover
16	Distance ring	36	Breather plug
17	Distance piece	37	Oil level indicator
18	Distance piece	38	Oil level marker
19	Distance piece	39	Drain plug
20	Open cover		

HELICAL GEAR TYPE : SDN

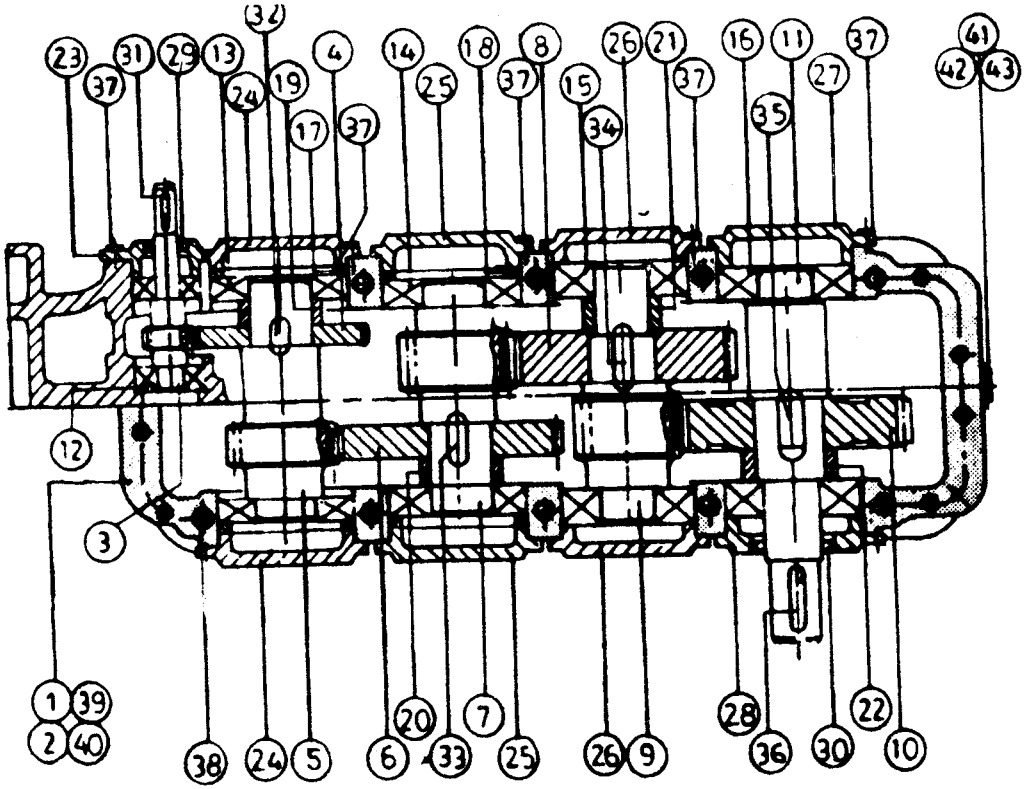

PART LIST SDN

1. Gear Case top
2. Gear Case bottom
3. Input pinion
4. 1st intermediate wheel
5. 1st intermediate pinion
6. 2nd intermediate wheel
7. 2nd intermediate pinion
8. 3rd intermediate wheel
9. 3rd intermediate pinion
10. Output wheel
11. Output shaft
12. Bearing
13. Bearing
14. Bearing
15. Bearing
16. Bearing
17. Distance ring
18. Distance ring
19. Distance piece
20. Distance piece
21. Distance piece
22. Distance piece
23. Open cover
24. Blank cover
25. Blank cover
26. Blank cover
27. Blank cover
28. Open cover

29 Oil seal (Input)
30 Oil seal (output
31 Key for input
32 Key for 1st int. mdt. wheel
33 Key for 2nd int. mdt. wheel
34 Key for 3rd int. mdt. wheel
35 Key for output wheel
36 Key for output shaft
37 Hex. head screw
38 Hex. head bolt
39 Inspection cover
40 Breather plug
41 Oil level indicator
42 Oil level marker
43 Drain plug

SPIRAL - BEVEL HELICAL GEAR TYPE : KBN

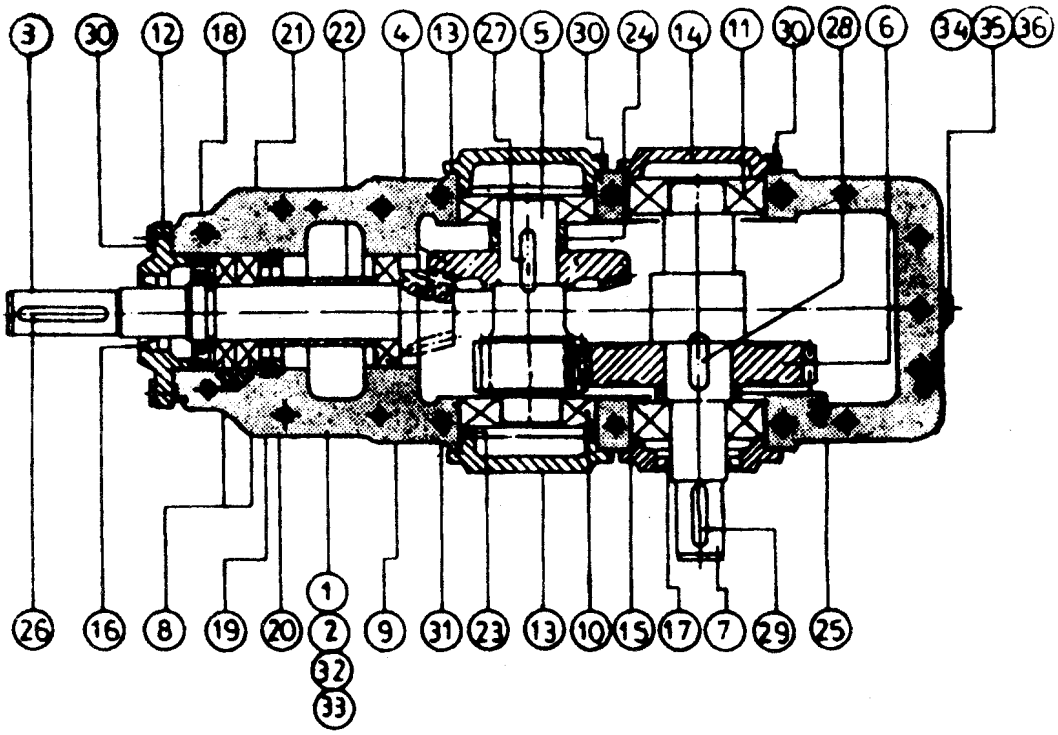

PART LIST KBN

1	Gear case tope	19	Distance ring
2	Gear case bottom	20	Retaining ring
3	Input pinion (spiral bevel)	21	Locknut & washer
4	Spiral bevel wheel	22	Spacer sleeve
5	1st intermediate pinion	23	Distance ring
6	Output wheel	24	Distance piece
7	Output shaft	25	Distance piece
8	Input bearing	26	Key for input shaft
9	Input bearing	27	Key for 1st int. mdt. wheel
10	1st intermediate bearing	28	Key for output wheel
11	Output bearing	29	Key for output shaft
12	Open cover	30	Hex. head screw
13	Blank cover	31	Hex. head bolt
14	Blank cover	32	Inspection Cover
15	Open cover	33	Breather Plug
16	Oil seal (input)	34	Oil level indicator
17	Oil seal (Output)	35	Oil level marker
18	Distance ring	36	Drain plug

SPIRAL - BEVEL HELICAL GEAR TYPE : KCN

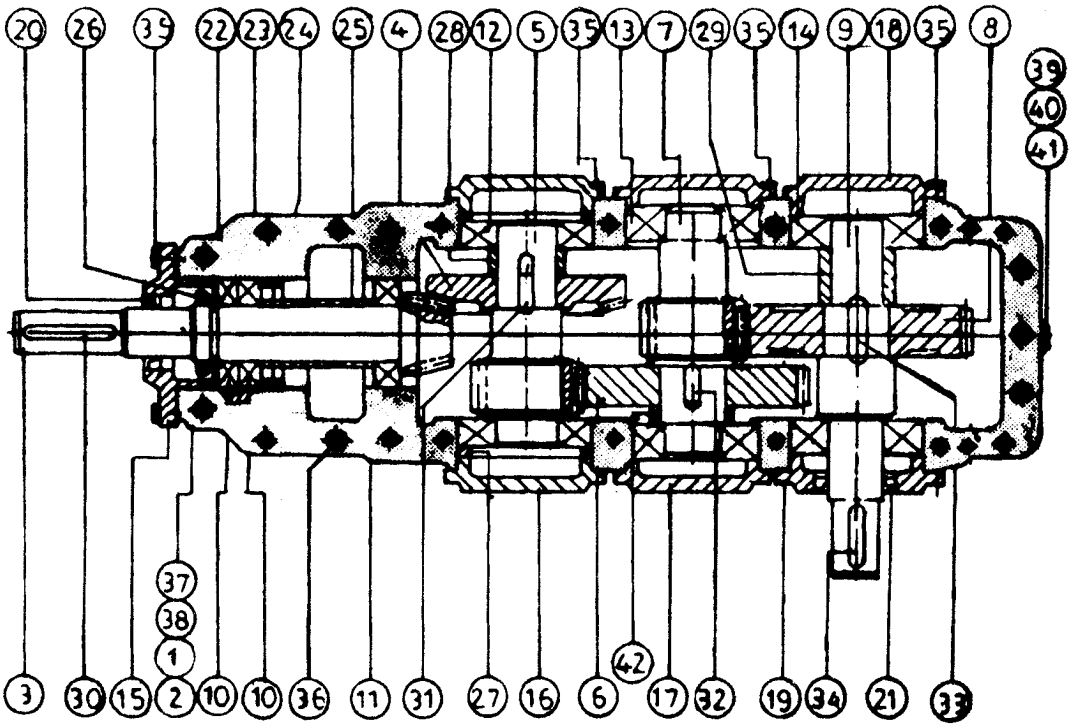

PART LIST KCN

1	Gear case top	22	Distance ring
2	Gear case bottom	23	Distance ring
3	Input pinion (spiral bevel)	24	Retaining ring
4	Spiral bevel wheel	25	Spacer sleeve
5	1st intermediate pinion	26	Locknut & washer
6	2nd intermediate wheel	27	Distance ring
7	2nd intermediate pinion	28	Distance piece
8	Output wheel	29	Distance piece
9	Output shaft	30	Key for input shaft
10	Input bearing	31	Key for 1st int. mdt. wheel
11	Input bearing	32	Key for 2nd. int. mdt. wheel
12	1st intermediate bearing	33	Key for output wheel
13	2nd intermediate bearing	34	Key for output shaft
14	Output bearing	35	Hex. head screw
15	Open cover	36	Hex. head bolt
16	Blank cover	37	Inspection cover
17	Blank cover	38	Breather plug
18	Blank cover	39	Oil level indicator
19	Open cover	40	Oil level marker
20	Oil seal (input)	41	Drain plug
21	Oil seal (Output)	42	Distance piece

SPIRAL - BEVEL HELICAL GEAR TYPE : KDN

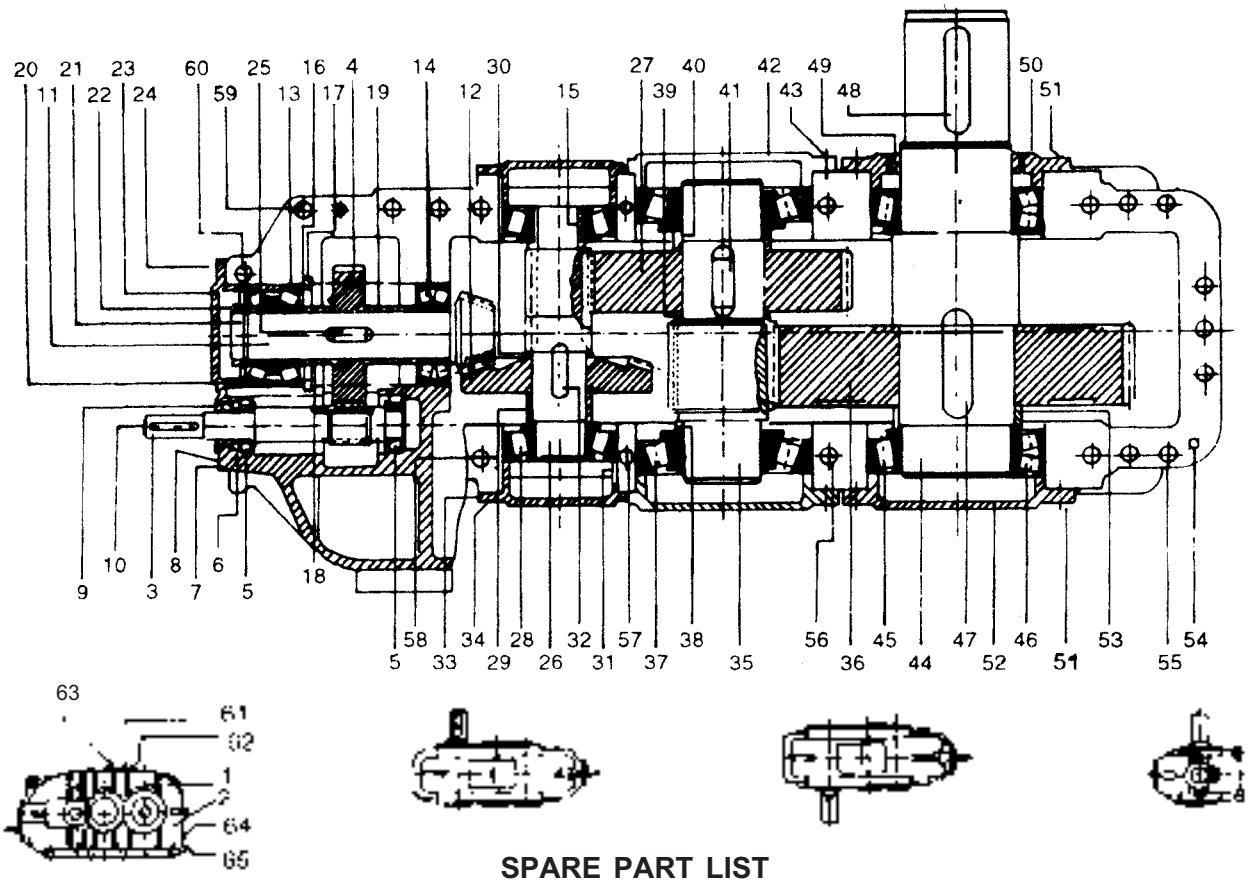

SPARE PART LIST
For KDN unit Drg No 703-1-386

Item No	Description	Qty
1	Top gear case	1
2	Bottom gear case	1
3	Input pinion	1
4	Ist Int.Mdt.Wheel	1
5	Taper brg	2
6	Nilos ring	1
7	Open cover	1
8	Hex. Hd. Screw	4
9	Oil seal	2
10	Input key	1
11	S/B pinion (Ist Int. Mdt)	1
12	S/B wheel (2nd Int. Mdt.)	1
13	Taper roller brg	1set
14	Spherical roller brg	1
15	Guide bush	1
16	Dist ring	1
17	Locating ring	1
18	Dist ring	1
19	Dist ring	1
20	Dist ring	1

Drg No 703-1-386

Item No	Description	Qty
21	Dist ring	1
22	Lock nut	1
23	cover blank	1
24	Hex. head screw	6
25	Key	1
26	2nd Int. Mdt. Pinion	1
27	3rd Int. Mdt. Wheel	1
28	Taper roller brg	2
29	Dist ring	1
30	Dist ring	1
31	Dist ring	2
32	Key	1
33	Cover blank	2
34	Hex. head. screw	12
35	3rd Int. Mdt. Pinion	1
36	Output wheel	1
37	Taper roller brg	2
38	Dist ring	1
39	Dist ring	1
40	Dist ring	1
41	Key	1
42	Cover bank	2
43	Hex. hd. screw	12
44	Output shaft	1
45	Taper roller brg	2
46	Spherical roller brg	2
47	Key	1
48	Key	1
49	Oil seal	1
50	Cover open	1
51	Hex. hd. screw	12
52	Cover bank	1
53	Dist.ring	2
54	Grooved dowel pin	2
55	Hex. bolt with nut	7
56	Hex.hd bolt with nut	4
57	-do-	2
58	-do-	2
59	-do-	6
60	-do-	2
61	Inspection cover	1
62	Hex. hd. screw	6
63	Gear air vent filter	1
64	Oil level gauge	1
65	Drain plug	1

Caution ! The hollow shaft should be in alignment with the machine shaft so that no canting is possible

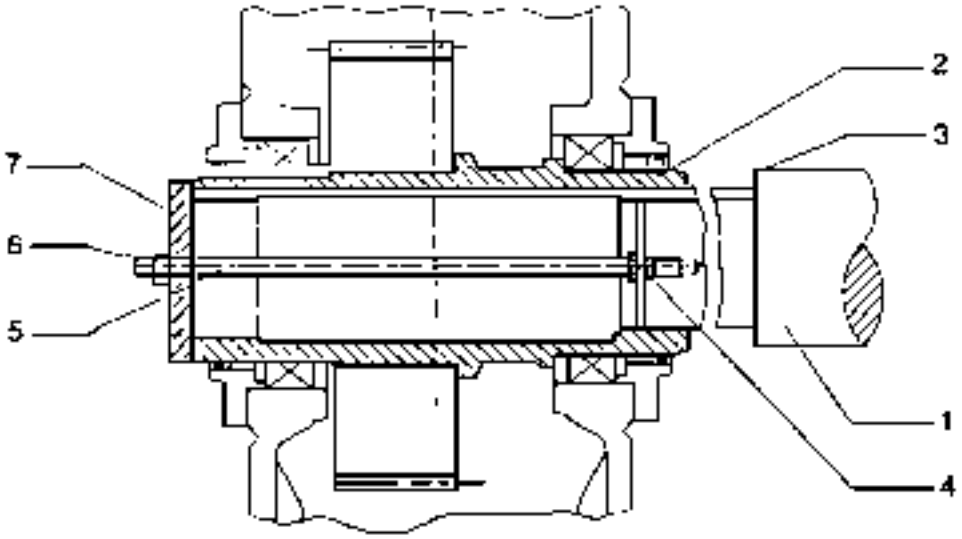

Figure 1

1	Machine shaft	5	Threaded spindle
2	Hollow shaft	6	Nut
3	Parallel key	7	End plate
4	Nut		

Instead of using the shown nut and threaded spindle, e.g. a hydraulic lifting device (Lucas) may alternatively be used.

Caution ! Make sure that there is no canting during pulling off.

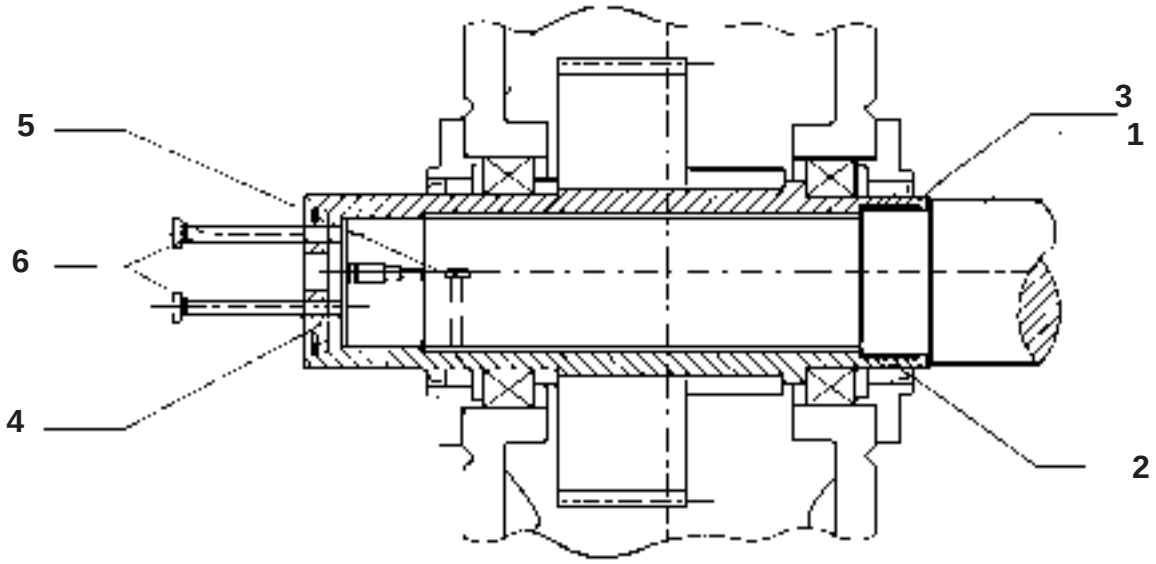

Figure 1

1	Machine shaft	4	End plate
2	Hollow shaft	5	Bore for feeding penetrating oil
3	DU bush	6	Forcing Screws

COUSTOMER DATA SHEET

Company :		
Name and Designation :		
Address		
City :	State :	Pincode :
Phone :	Fax :	

Yes !!! We want more information

Please check for more information on the following

A. Power Transmission Products

- ✧ WORM GEARBOXES
- ✧ WORM DOUBLE REDUCTION G/B
- ✧ HELICAL GEARBOXES
- ✧ HELI-WORM GEARBOXES
- ✧ SHAFT MOUNTED GEARBOXES
- ✧ SPECIAL GEARBOXES
- ✧ GEAR ACCESSORIES
- ✧ PLANETARY GEARBOXES
- ✧ SLEWING GEARBOXES
- ✧ GEARED MOTORS
- ✧ FLUID COUPLING
- ✧ GEARED COUPLING
- ✧ FLEXIBLE COUPLING

B. Service

- ✧ GENUINE SPARES
- ✧ TESTING ON LOAD
- ✧ INSTALLATION
- ✧ REPAIRING & OVERHAULING
- ✧ DAILY SERVICE CONTRACT
- ✧ ANNUAL SERVICE CONTRACT

DEATILS OF REQUIREMENTS (PLEASE INDICATE WITH SKETCHES OR DRAWINGS AS APPLICABLE)

RESPONSE EXPECTED

- ✧ SEND INFORMATION & BROCHURES ONLY
- ✧ VISIT OF REPRESENTATIVE REQUIRED
- ✧ CALL ON PHONE IMMEDIATELY
- ✧ OTHER

For Faster Response fax this sheet on 02692-36508
EMTICI ENGINEERING LTD.
ANAND SOJITRA ROAD
VALLABH VIDYANAGAR 388 120
PHONE : 02692 - 30168/31082

IMPORTANT NOTES

(1) It is advisable that the client should NOT open the gear box during guarantee period. In case it is of immense importance to open the gear box, the client should contact ELECON to seek the service from ELECON. In emergency cases, if the gear box is opened by client they should ensure that all the taper roller bearings and spherical roller bearings are adjusted properly by the experienced workmen and advice for proper clearance be sought from ELECON.

It is also necessary while refitting the gear box, a special case joining compound should be used and its thickness should not be higher than 0.002 mm.

(2) Client should use lubricating oil as per group 169 mentioned on page 14 of this manual unless otherwise stated.

ELECON EPC PROJECTS LIMITED

COUPLING

ELECON EPC
ELECON EPC PROJECTS LIMITED

COUPLINGS

1) TRAVEL DRIVE

Flexible Brake Coupling

Type & Size	**: FBC 200 with Brake Drum**
Bore Detail	**: 42 Dia. Motor Side** **25 Dia. Gear Side**
Make	**: Elecon**

2) SCRAPER CHAIN DRIVE (MAIN BOOM)

Fluid Coupling with Geared Coupling

Type & Size	**: CDR-R 420 + ED - 1000**
Bore Detail	**: 65 Dia. Motor Side** **50 Dia. Gear Side**
Oil Filling Angle	**: 73 degree**
Oil Filling Capacity	**: 9.64 Liter**
Make	**: Elecon**

3) SCRAPER CHAIN DRIVE (AUXILIARY BOOM)

Fluid Coupling with Geared Coupling

Type & Size	**: CDR-R 370 + ED - 1000**
Bore Detail	**: 55 Dia. Motor Side** **35 Dia. Gear Side**
Oil Filling Angle	**: 72 degree**
Oil Filling Capacity	**: 6.8 Liter**
Make	**: Elecon**

HORSEPOWER RATING AND DIMENSIONS (MM)												
COUP. SIZE	ØA FINISH BORE		ØB	C	E	BRAKE DRUM		Nominal Torque Kgm	Maxi. speed rpm	HP/RPM	GD^2 KGM^2	Approx weight kgs.
	Mini	Maxi				ØD	W					
FBC200	16	55	92	46	60	200	95	64	2870	0.090	0.32	17

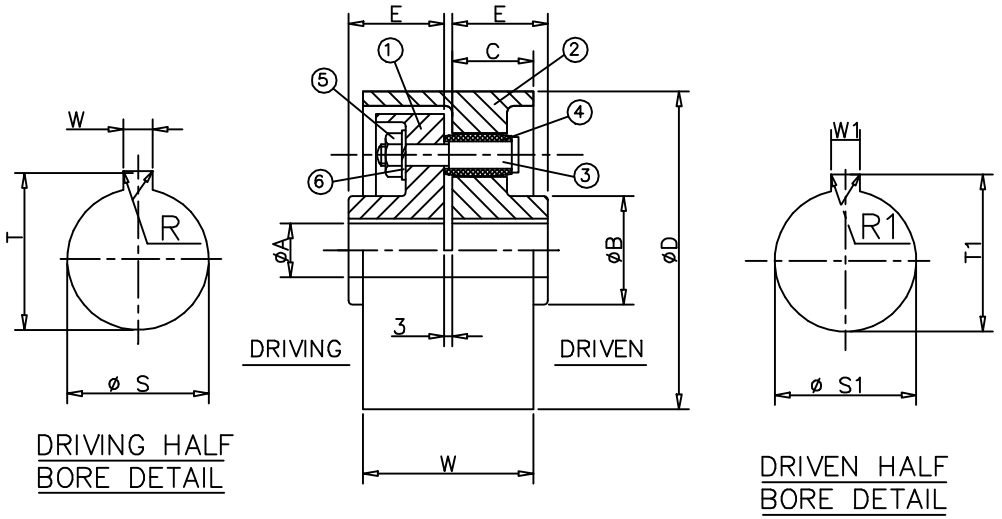

PERMISSIBLE LIMITS OF MISALIGNMENT AS PER IS: 2693
FOR HELICAL GEARS KEY & KEYWAYS AS PER DIN: 6885 PART–1
FOR WORM GEARS KEY & KEYWAYS AS PER IS: 2048

MATERIAL CONSTRUCTION		
PART NO	DESCRIPTION	MATERIAL
1	DRIVING HALF	FG: 260 IS: 210
2	DRUM HALF	FG: 260 IS: 210
3	PIN	MS
4	RUBBER BUSH	PERBUNAN SHORE 75–80A
5	HEX. NUT	P8 IS: 1364
6	WASHER	SPRING STEEL

SR NO	COUPLING SIZE	EQPT NO/ CONV. NO	QTY	DRIVING HALF BORE & KEYWAY DETAILS					DRIVEN HALF BORE & KEYWAY DETAILS				
				MOUNTING	ØS	T	W	R	MOUNTING	ØS1	T1	W1	R1
01	FBC–200	TRAVEL DRIVE	02	MOTOR SHAFT	Ø42 +0.025 0.000 H7	45.5 45.3	12 −0.018 −0.061 P9	0.4	I/P SHAFT OF GEARBOX	Ø25 +0.021 0.000 H7	28.5 28.3	8 −0.015 −0.051 P9	0.25

CLIENT : M/s IFFCO LTD.

Rev.	No. of Rev.	Name	Ammendments	Date

Type of COUPLING
FBC

Allowable Tolerance ISO 2768-mK
Tolerance acc. to ISO 8015

Scale: NTS
Weight:
Material:
Order No : CO/2223

Edges are according to ISO 13715

	Name	Date
Drawn	K.M.P	15/06/12
Checked	K.M.P	15/06/12
Approved	D.N.P	15/06/12

Title DIMENSIONS SHEET FOR FBC FLEXIBLE BRAKE COUPLING

C D :
Ratio:

Surface DIN ISO 1302

ELECON

Drawing-No. 47–74–0449
Rev. –
Sheet 1 of 1

Modified from: –
Superseded from: –

COUPLING DIVISION

INSTALLATION & MAINTENANCE MANUAL

ELECON : PIN-BUSH TYPE FLEXIBLE COUPLING

1) First of all take out the coupling from the box, rest on any convenient surface and verify the size of coupling with respect to purchase order / invoice.

2) Inspect all components of coupling and remove protective coatings or lubricants (if any) from bores, mating surfaces and fasteners.

3) Check the condition of rubber bushes. Replace if, required.
Remove burrs, etc. from the shafts, if any.

4) Mount driving and driven halves of coupling on respective shaft.
Do alignment of the shafts and keep DBSE (Distance Between Shaft Ends) as per dimension “G” mentioned in our catalogue / drawing.

5) Do the best practical alignment because the misalignment can cause extra loading on coupled shaft support bearing which can reduce the operational life of coupling.

6) Tighten the fasteners uniformly and check key fit.

==========

ELECON ENGINEERING COMPANY LIMITED
(Gear Division)
POST BOX # 6, ANAND SOJITRA ROAD, VALLABH VIDYANAGAR, 388 120, GUJARAT, INDIA
Gear Division : Phone : +91 (2692) 236513, 236516, 236469, Fax : +91 (2692) 236527
Material Handling Equipment Division : Phone : +91 (2692) 237016, 236561, Fax : +91 (2692) 236547
Web Site : http://www.elecon.com

Always a step ahead in technology

Document Produced by deskPDF Unregistered :: http://www.docudesk.com

Elecon Fluid Coupling with Gear Coupling

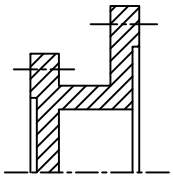

DETAIL–'X'
SHAPE OF SPACER FOR SIZE : 320 & 370

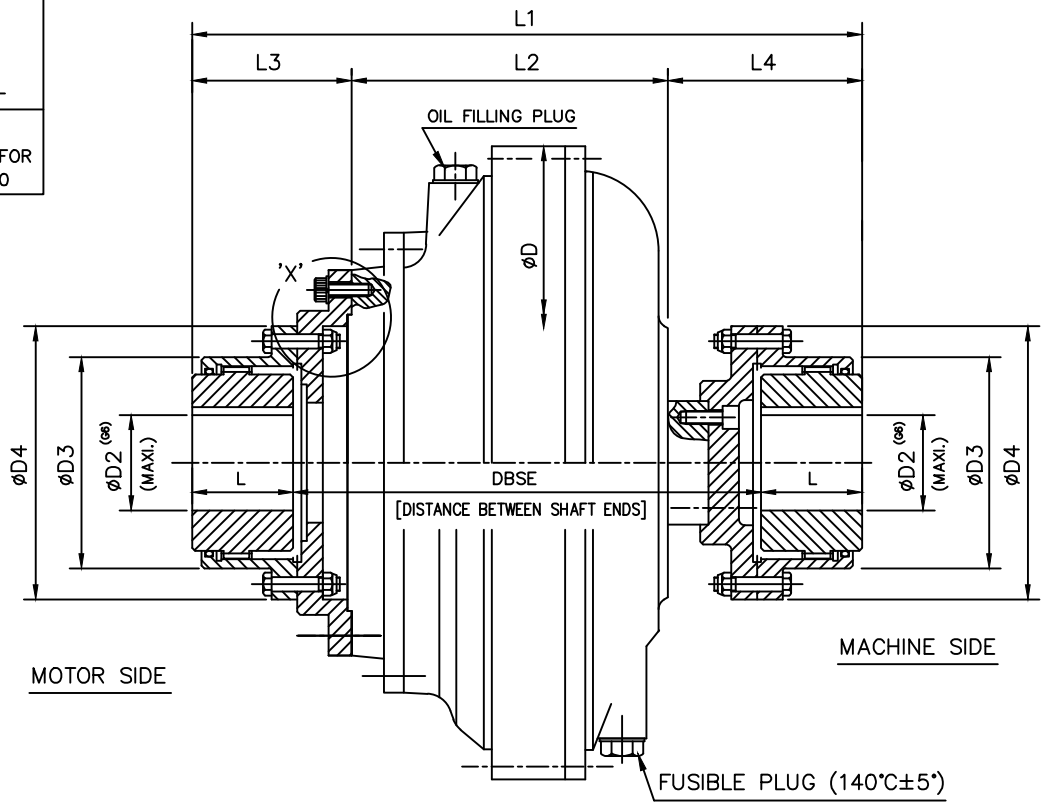

TYPE & SIZE											
FLUID COUPLING				CDR-R	320	370	420	480	584	660	760
ELIGN GEAR COUPLING				ED	500	1000	1000	1600	2200	3200	4500
FLUID COUPLING + GEAR COUPLING	J (kgm2)	FLUID COUP.			0.32	0.62	0.99	1.88	4.15	7.54	13.30
		GEAR COUP.	INPUT		0.05	0.13	0.19	0.34	0.70	1.52	2.53
			OUTPUT		0.02	0.09	0.09	0.16	0.36	0.66	1.01
	TOTAL Wt(DRY) (kg)	FLUID COUP.			29	40	56	81	141	198	275
		GEAR COUP.	INPUT		13	23	24	33	47	78	104
			OUTPUT		11	21	21	28	44	67	86
				D	365	425	475	550	670	760	870
				D2	75	95	95	110	130	155	175
				D3	129.5	156	156	181	209	247	273
				D4	171	210	210	234	274	312	337
				L	62	76	76	90	105	120	135
				DBSE	351	396	423	430	487	555	635
				L1	475	548	575	610	697	795	905
				L2	203	225	257	297	333	384	445
				L3	148	171	155	144	168	192	210
				L4	124	152	163	169	196	219	250

ISSUE	DATE	AMMENDMENT				
			DIMEN.SHEET OF FLUID COUP. WITH GEAR COUPLING			ELECON
			DRN.BY	T.M.PATEL 27/06/02	ORDER NO.:	DRG NO.:
			CHD.BY	N.K.BHATT		
			MECH		SCALE:	

(GA4) SIZE : 200 X 260

Elecon-
hydrokinetinc fluid coupling traction type: instructions for installation and maintenance.

Elecon-
hydrokinetinc fluid coupling
traction type:
instructions for
installation
and maintenance.

SIZE:.....
TYPE:.....
MOTOR:.....kW at.....r.p.m.
COUPLING SERIAL NUMBER:.....
OIL FILL:.....litres
FILL ANGLE:.....
APPLICATION:.....

N.B. These instructions are intended primarily for staff carrying out installation and maintenance of the coupling unit.
It is imperative therefore to provide each mechanic with a copy. Further copies, can be supplied on request.
Should any questions remain outstanding after consultatioin of this brochure, please contact us immediately and one of our specialists will provide you with further information.

CONTENTS

1 DESCRIPTION 1

- 1.1 General 1
- 1.2 Construction and operation 1
- 1.3 Types of mounting 1

2 INSTALLATION 1

- 2.1 Installation 2
- 2.2 Alignment 3
- 2.2.1 General method of aligment
- 2.2.2 Flexible Couplings
- 2.2.3 Fluid Coupling-Puliey Aligment
- 2.3 Oil filling 6
- 2.3.2 Type of oil
- 2.3.2 Quantity of oil and filling angle
- 2.3.3 Fusible plug

3 MAINTENANCE 10

- 3.1 Serving
- 3.2 Troubleshooting
- 3.3 Removal of fluid coupling unit
- 3.4 Repairs

4 SPARES 12

- 4.1 Ordering Spares 12
- 4.2 Drawing 13
- 4.2.1 Sizes 270-660 XR
- 4.2.2 Sizes 185-270 RX, 320-584 RX
- 4.2.3 Sizes 185-235 PHR & PHM, 185-235 PHR & PHM (large bore)
- 4.2.4 Sizes 270-370 PHR & PHM, PHR & PHM Mounting
- 4.2.5 Sizes 420-584 PHR & PHM, PHR & PHM Mounting
- 4.3 Parts List 19

1 DESCRIPTION

1.1 General

Elecon Fluid Coupling operates on the hydrokinetic power transmission principle:power is transmitted by means of a fluid, there being no mechanical contact between the motor and the driven machine. As such, it constitutes a safety feature protecting transmission components from damage due to overload or shock. The fluid coupling permits the use of a squirrel cage induction motor with the attendant advantages of simplicity, ruggedness and low operating costs. Torque transmitted is directly proportional to the amount of fluid in the unit and hence it is very simple, by varying the oilfill, to match the coupling to the exact requirements of the driven machine.

1.2 Construction and operation

Elecon hydrokinetic Fluid Coupling comprises of three essential components:

-the impeller (2) driven by the motor

-the runner (3) fitted on the output shaft

-the runner casing (4) which forms an oiltight assembly. It is possible also to fit a delayed filling chamber (23) to this assembly, communicating with the working ciruit by means of calibrated nozzles and retaining part of the fluid when the Fluid Coupling stops running. At motor switch-on, only the fluid in the work circuit is active and the torque developed is low. During the start-up phase, fluid in the delayed filling chamber transfers progressively into the work circuit, increasing the amount of active fluid and hence the torque.

The motor thus starts under minimum load and the driven machine is brought up to speed smoothly. Different mountings are available, the type of coupling being chosen accordingly.

1.3 Types of Mounting

Pulley-type coupling: PH MOUNTING. This compact assembly features a hydrokinetic Fluid Coupling combined with a grooved pulley. The assembly is fitted on the motor shaft and requires no aditional support other than of the motor.

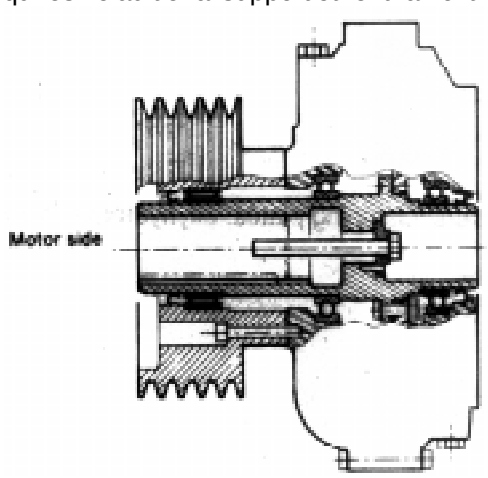

Hollow Shaft Coupling : **XR MOUNTING**

This compact assembly permits the motor and reducer unit and the driven machine to be coupled in-line by means of a Fluid Coupling with a flexible coupling on the motor side.
The coupling is supported in position by the input shaft of the reduction gear or the machine.

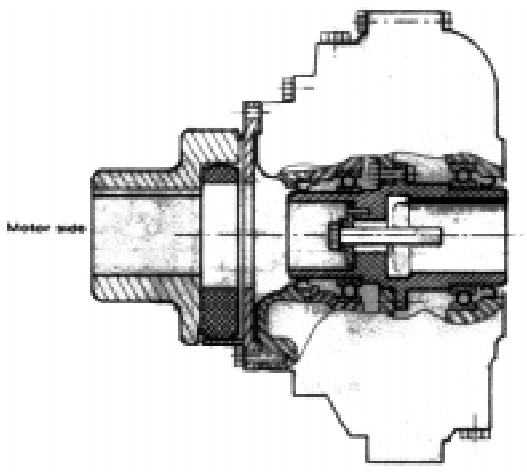

Solid Shaft Coupling : **R MOUNTING**

The coupling is fitted on the motor shaft and coupled to the driven machine by means of a flexible coupling mounted between the Fluid Coupling output shaft and the input shaft of the machine.

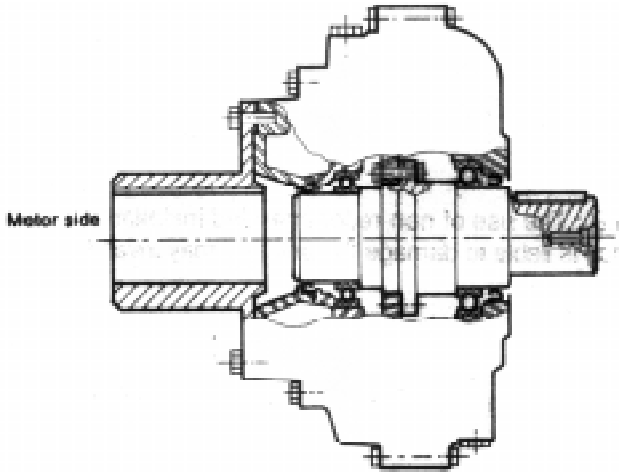

2. INSTALLATION

2.1 Installation of Coupling

Elecon hydrokinetic Fluid Coupling is delivered with its runner shaft machined to match the driven machine or motor shaft dimensions.

Installation operations:

1) Check that the shafts are dead-centred.

2) Fit the keys and grease the shaft.

3) Fit the coupling on the motor shaft or driven shaft, as required, by means of a threaded rod and a plate (Figure 1).

Ensure that the plate is in correct position on the hollow shaft and not on the delayed filling chamber, which would otherwise suffer damage.

Fig 1

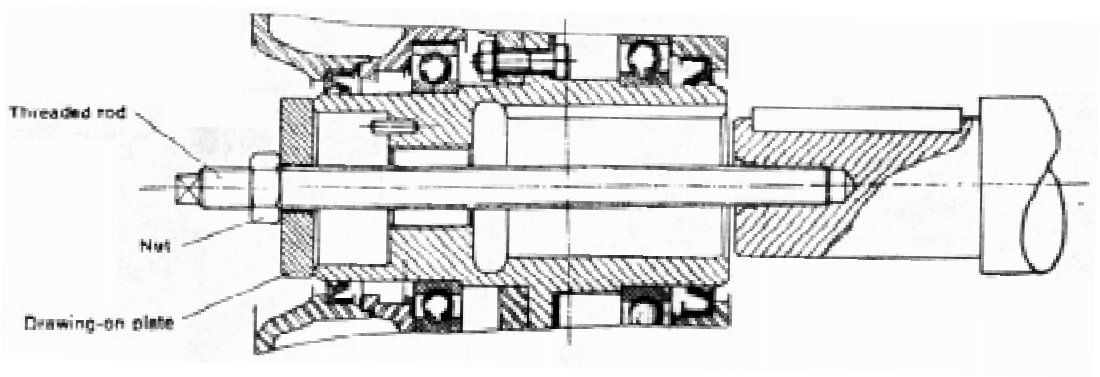

4) When the coupling is correctly in position, prevent any lateral displacement by fitting the retaining plate, TREP washer and lock nut (Figure 2).

5) For the XR mounting, fit the flexible coupling boss on the motor shaft by means of a threaded rod and a plate (as shown in Figure 1 for the traction coupling).
Check that the end of the motor shaft does not knock against the traction coupling.

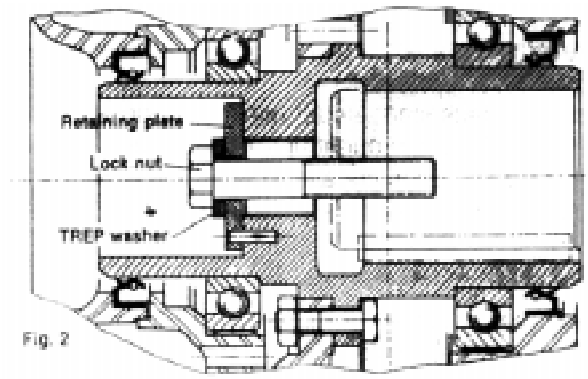

Fig. 2

N.B. : The use of non-recommended equipment (eg, hammers, clamping plates, oxyhydrogen bumers, etc.) is liable to damage the unit and may invalidate warranty claims.

2.2 Alignment

Correct alignment is essential for the correct functioning of the Fluid Coupling and the durability of the installation.

Alignment Procedure:

1) Once the driven machine is mounted in its correct position, bolt it onto the bed-plate.
2) Fit the flexible components in the flexible coupling or the pulley belts in the case of a PH coupling.
3) Place the electric motor close to the traction coupling in approximately the correct position. For precise motor alignment, particularly with large motors, the use of adjustment screws with brackets attached to the bed-plate (see-Figure 3) is recommended.

Various possibilities exist for motor-Fluid Coupling alignmjent.

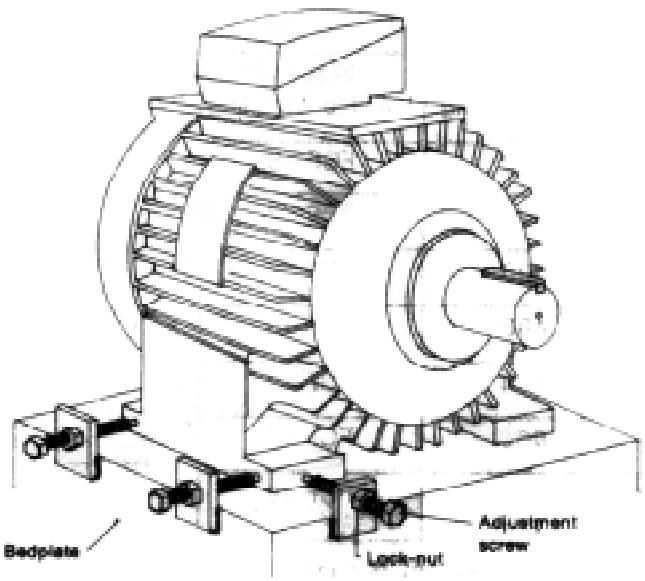

2.2.1 General method of alignment

In general, correct alignment requires that:

a) the two half-couplings must be perfectly parallel. No angle should be formed between them.

b) while remaining parallel, the two half-couplings must not be offset raadially to each other.

The first condition is met if a thickness guage or caliper gives a constant reading of ± 0.1 mm. between the two half-couplings when the Fluid Coupling is rotated manually through 360^0.

The second condition is met if a flat rule laid against the external diameters of the half-couplings is perfectly flush with the surface of both.

Greater accuracy of alignment can be achieved by using a dial gauge.

After tightening the motor holding-down bolts and the flexible coupling flange bolts, re-check the alignment.

2.2.2 Flexible Couplings with size of fluid coupling.

Method of alignment, its values and tolerance are as per IS:2693

Size of Fluid Couling	Size of Flexible Coupling
320	FCF 6
370	FCF 7
420	FCF 9
480	FCF 10
584	FCF 13
660	FCF 14
760	FCF 16

See: General alignment method.

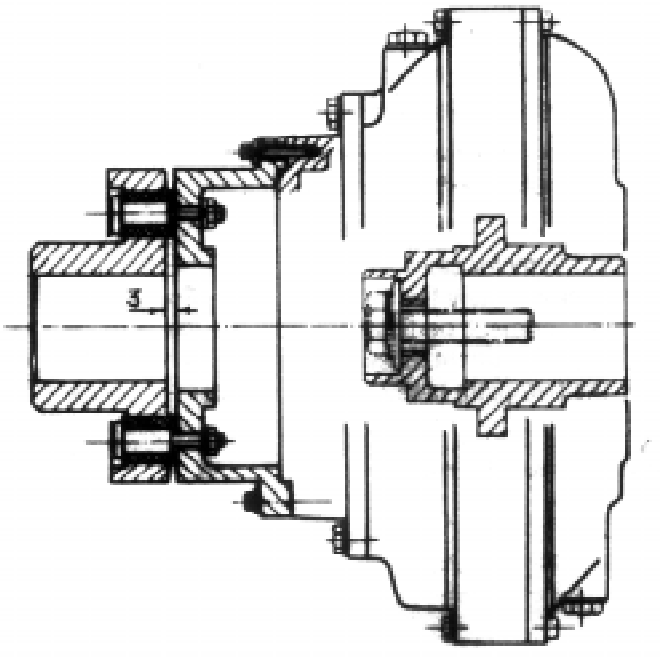

Size of Fluid Coupling	Size of Flexible Coupling
320	FCFB 6
370	FCFB 7
420	FCFB 9
480	FCFB 10
584	FCFB 13
660	FCFB 14
760	FCFB 16

See: General alignment method.

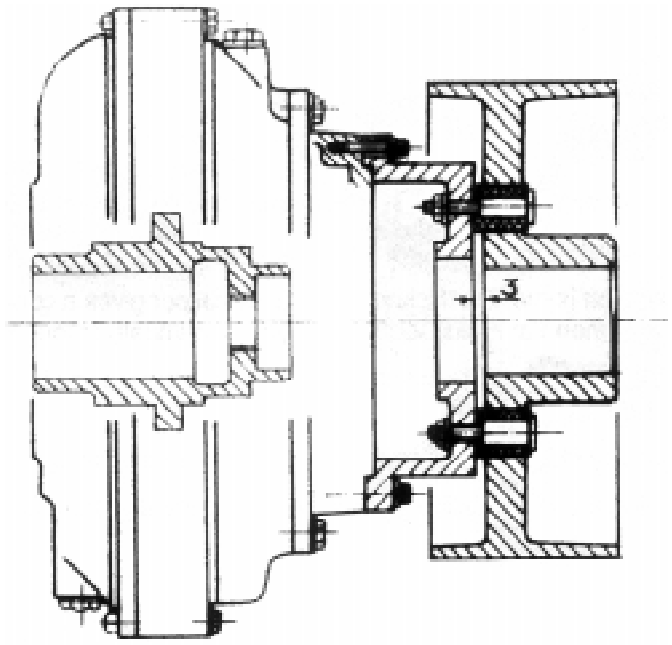

2.2.3 Fluid Coupling-Pulley algnment (Type PHR-PHM)

1) Fit the coupling on the motor shaft or driven shaft, as required, by means of a threaded rod.

2) Fit the pulley belts (untensioned) by moving the two pulleys as close together as possible.

3) Ensure that the two pulleys are parellel by means of a wire or a rule.

4) Before tensioning the belts on the pulleys,trace two thin lines transversally on the back of one of the inside belts. These marker lines should be as far apart as possible.

Progressively tighten the pulley belts, after rotating them during several period of one minute each. Between these periods, tighten the belts so as to increase the length between the marker lines by the percentage listed below:

Transmission characteristics	UNIFORM motor or resistive torque	IRREGULAR motor or resistive torque
Small diameter pulleys short distance between centres(E<D+d)	0.6%	0.8%
Medium or large diameter pulleys Medium or large distance between centres	0.8%	1%

E=distance between pulley centres; D and d=pulley diameters

After 24 hours operating, check the transmission and re-tighten the pulley belts, if necessary.

For example:an initial distance of 1000 mm between the 2 marker lines will be increased by the tension to 1006 mm (0.6%) or 1008 mm (0.8%).

2.3 Oilfilling

The choice of coupling size having been made in accordance with the rotating speed and the power transmission required, the oilfilling for the traction coupling will be determined by:
-the power actually transmitted to the machine.
-the required starting torque.
The maximum allowable oilfill amounts to approximately 80% of the total capacity of the Fluid Coupling. This level should never be exceeded since overfilling may cause overpressure inside the coupling and damage to the seals.

2.3.1 Types of oil

During normal operating conditions, the fluid used (usually mineral oil) should meet the following requirements:

Density at 15^0 C	0.873-0.879
Engler Viscosity at 50^0 C	2.9 to3
Flash point ^{0}C.	210
Aniline point	105 to 108
Pour point	-30^0
Viscosity indext	$\geq$ 105

The oild used should be antioxydant and anti-foaming.

Correspondence tables of oils, recommended for our traction couplings:(Viscosity as per ISO 3448)

Make	Oil type	
	Recommeded	Possible variants
Bharat Petroleum	Bharat Hydrol 46	Bharat Hydrol 32
Castrol	Castrol Hyspin VG 46	Castrol Hyspin VG 32
Indian Oil	Servosystem HLP 46	Servosystem HLP 32

2.3.2 Determination of the initial oil filling

To determine the amount of oil required:

USE

Table 3.a for CD (without delayed filling chamber)
Table 3.b for CDR (with delayed filling chamber)
Table 3.c for CDRP (with extended delayed filing chamber)
- Calculate the nominal trorque co-efficient, Kn, using the following formula:

$$Kn = \frac{P}{X}$$

Where P = motor power or transmitted power in Kw
X = value taken from table 1, appropriate to the coupling size and motor speed.

The co-efficient Kn corresponds to the nominal full load torque.

Calculat the co-efficient Km corresponding to the starting (or stalling) torque as shown in the following example:

Oil Change

Recommended every 8000 hours of working or every two years.

Table 1
VALUE of X
(for Type CD, CDR, CDRP)

Fluid Coupling	Size	*185	*235	* 270	320	370	420	480	584	660	760	870
	Outside Diameter Dmm	225	275	315	365	425	475	550	670	760	870	995
	750	0.06	0.2	0.38	0.90	1.90	3.57	6.85	18.7	34.4	70	135
	900	0.10	034	0.66	1.56	3.27	6.17	11.9	32.3	59.4	120	235
	1000	0.14	0.47	0.91	2.15	4.48	8.45	16.3	44.2	81.5	165	320
	1200	0.25	0.82	1.60	3.75	7.50	14.70	28.5	77.3	142	280	550
	1500	0.49	1.62	3.14	7.40	15.50	29.0	56.2	153	280	(565)	(1115)
	1800	0.85	2.80	5.43	12.8	26.80	50.1	97.1	264	(484)	-	-
	3000	3.91	12.9	25.20	59.3	123	-	-	-	-	-	-

***Note : For size 185, 235 & 270 coup. type CDR & CDRP are not applicable.**

Table 2

	FILLING ANGLE α^0						
		Table 2.a		Table 2.b		Table 2.c	
	Coupling Type	CD		CDR		CDRP	
FILLING ANGLE α^0	Co-efficient	Km	Kn	Km	Kn	Km	Kn
	50	5.6	2.4	5.7	2.7		
	55	5.1	2.1	5.2	2.5		
	60	4.5	1.9	4.7	2.2	4.7	2.8
	65	3.65	1.7	4.1	2.1	4.1	2.7
	70	2.66	1.6	3.2	2	3.2	2.5
	75	2	1.3	2.8	1.8	2.8	2.2
	80	1.5	0.8	2.4	1.7	2.4	2.1
	85	1.3	0.6	2.1	1.4	2.1	2
	90	1	0.4	1.8	1.2	1.6	1.8
	95	0.8	0.3	1.2	0.9	1.2	1.5
	100	0.7	0.2	0.96	0.7	0.95	1.3

	Table 3.a									
Coupling	Type	CD (without Delayed dilling chamber)								
	Size	185	235	270	320	370	420	480	584	660
FILLING ANGLE α^0	50	1	1.90	2.60	4.20	7.10	10.05	15	26.55	44.50
	55	0.97	1.86	2.45	4	6.90	9.50	14.30	26.60	42.60
	60	0.93	1.80	2.30	3.80	6.50	8.90	13.60	24.30	40.60
	65	0.88	1.70	2.20	3.60	6	8.40	12.80	23	38.20
	70	0.82	1.58	2.00	3.30	5.70	7.80	12	21.40	35.80
	75	0.76	1.50	1.90	3.10	6.20	7.20	11.20	20	33.40
	80	0.70	1.39	1.80	2.90	4.80	6.70	10.20	18.40	31
	85	0.64	1.27	1.70	2.65	4.40	6.30	9.30	16.80	28.60
	90	0.57	1.14	1.55	2.40	4	5.70	8.50	15.30	26.30
	95	0.52	1.02	1.40	2.25	3.70	5	7.80	14	24
	100	0.46	0.90	1.30	2.10	3.40	4.60	7.20	13	22

		Table 3.b								Table 3c						
Coupling	Type	CDR (with Delayed filling chamber)								CDRP (with Extralarge delayed filling chamber)						
	Size	320	370	420	480	584	660	760	870	370	420	480	584	660	760	870
FILLING ANGLE α^0	50	5.20	9	12.50	20	34.10	52	75	111	10.90	15.20	22	36.50	59.50	90	136
	55	5	8.60	12.10	18.90	32.70	50.20	71	105	10.30	14.80	21.10	35.10	57.80	85	129
	60	4.70	8.20	11.30	17.90	31.20	47.80	67	99	10	14.20	20.20	33.60	55.10	80	122
	65	4.40	7.60	11	16.60	29.20	45	62	93	9.20	13.65	19.10	31.80	51.80	75	114
	70	4	7	10	15.30	27.20	42	57	86	8.30	13	18.10	30	48.20	68	106
	75	3.70	6.50	9.40	14.30	25	39	53	79	7.80	11.90	16.90	28.20	44.20	63	96
	80	3.30	5.90	8.60	13.30	22.80	36	49	73	7	10.80	15.70	26.20	41	58	88
	85	3.10	5.60	8.10	12.10	20.90	33	46	68	6.6	0 9.70	14.50	24.20	37.40	54	81
	90	2.90	5	7.25	10.90	19	30.20	42	63	6	8.60	13.20	22.20	34.10	49	75
	95	2.70	4.80	6.50	9.60	17.50	27.60	38	58	5.90	7.30	12	20	31.20	44	69
	100	2.50	4.20	5.90	8.40	15.90	25.30	34	53	6	6.50	10.70	17.80	28.60	40	62

Approximate equivalent oil volume in litres at 20^0 C

Checking the oil fill

1) Place filling plug in vertical position and remove.
2) Rotate the coupling clowly until the oil just comes up to the filling hole.

   This position must match the angle from top-dead-centre calculated by the method given above.
3) If necessary, remove or add some oil.
4) Replace filling plug and tighten.

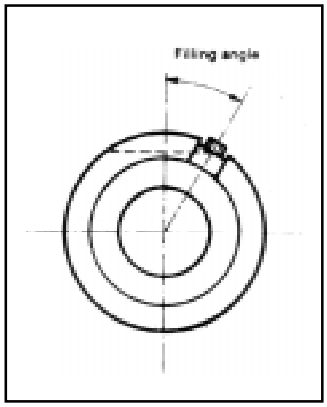

2.3.3 Fusible plug

A fusible plug (22) is fitted at one of the filling holes, for the purpose of preventing overheating of the coupling in the event of a prolonged stall or failure of the motor thermal relay. After removing the cause of the stall, a new fusible plug must be fitted and the coupling filled with clean oil as [per specifications.

For industrial applications, the maximum temperature is 140 (fusible p[lug marked number 1). At that termperature, thye fusible plug melts, allowing the oil in the coupling to drain off and removing the load from the motor. For applications with Diesel or Petrol engines, or in certain specific applications in industry, fusible plugs with a set melting point of 2000 are used (fusible plugs marked number 2).

Safety features

Oil losses can be prevented by using a thermal trip plug fitted instead and in the place of the fusible plug. This device actuates a motor cut-out system or triggers a warming signal in the event of the oil in the coupling reaching the set maximum temperature. In the event of activation, re-set the motor cut-out switch and fit a new thermal trip plug.

It is preferable to refill the coupling with cold fluid to acoid downtime while the original cluid cools down.

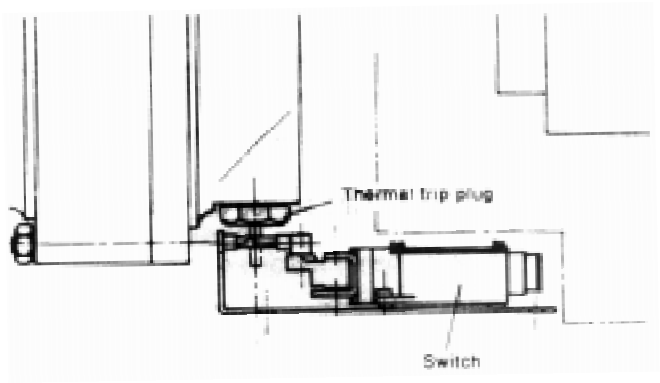

3. MAINTENANCE

3.1 Servicing

Elecon Fluid Coupling requires virtually no servicing since there are no mechanical components in contact with each other (other than bearings and seals). Bearings are amply dimensioned.

Seals are custom-built for our equipment and can withstand pressure of three bars. They are made of viton, ie, a material capable of withstanding cinstant temperatures of up to 200 C.

Nonetheless, periodic checks of the seals and the coupling alignhment are necessary. A programme of three-monthly checks, for example, may well prove suitable, depending on the duration and type of service involved.

a) Checking seals and oil level

All coupling undergo checks for all seals before leaving the factory.

The oil tightness of the filling plug and the Fluid Coupling can be checked by holding a clean sheet of paper some 10 cm from the coupling-any oil leaks will be shown up by this paper test.

If the oil appears dark in colour and emits a semll of burning, this is due to overheating. The oil is liable to oxidize or acidify and must be replaced immediately. Coupling temperature depends on the local operating conditions (frequency of start-ups, ambient temperatur,ect). But in no case should it exceed 80C. during normal service.

b) Checking alignment

In the event of misalignment occuring during service, this causes wear to the components of the flexible coupling It is recommended to replace them and correct the alignment.

c) Replacing fusible plugs

If the fusible plug has melted due to an overload or stall in driven machine, it must be replaced by a new Elecon-Sime fusible plug and coupling re-rilleg with clean oil.

Warning :

Fusible plug should never be replaced by solid plugs or ordinary solder. This would demage the Fluid Coupling and invalidate warranty claims.

3.2 Troubleshooting

1. Driven shaft fails to reach speed.

a)	Insufficient oil.	Check oilfill, as per 2.3.2
b)	Coupling seals not fully oiltight.	Check tightness of seals, as per 3.1
c)	Faulty motor or motor coupling.	Check motor:for electric motor, check speed, power consuption,etc., for diesel/petrol engine, check fuel injection setting, etc.

2. The fusible plugs melt.

a)	Insufficient oil.	Check the oilfill, as per 2.3.2
b)	Coupling seals not fuly oiltight.	Check tightness of seals, as per 3.1
c)	The drivn machine stalls or jams.	Check machine and remove cause of stall.
d)	Excessive power consumption of the driven machine.	Veryfy power consuption by means of a double wattmeter.

3. Abnormal vibrations/noise levels

a)	Incorrect algnment.	Check alignment, as per 2.2, and correct, if necessary.
b)	Damage to bearings.	Check the coupling. Locate noise and vibration sources by ear or by means of sound measurement instruments.
c)	Nut and bolt assemblies loose.	Check that holding-down bolts on motor, bed-plate and driven machine are correctly tightened.
d)	Undue vibration of the assembly.	After checking points a,b and c, locate source of vibrations and eliminate cause.

3.3 Removal of Fluid Coupling Unit

To remove the Fluid Coupling (XR and R mounting), the electric motor must be detached. After removing lock nuts and washers, use the special forcing-off bolt (48) to remove the coupling, having previously smeared the thread and end of the bolt with lubricant (oil or grease).

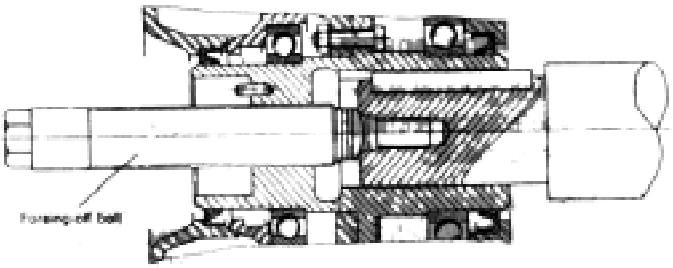

The special forcing-off bolt is supplied only on request. The same bolt can be used with the various XR and PH mountings, and for several sizes of coupling, as shown in the table below:

Fluid Coupling	Forcing-off bolt reference number	Thread
Sizes 270-320-370 Sizes 420-480-584-660		

For Fluid Couplings of the 185 and 235 type, the coupling shaft bore (tolerance F8) allows installation and removal to be carried out manually and this method must be employed.

3.4 Repairs

Whenever possible, repairs should be carried out in the workshops. All repairs must be done by qualified personnel working in a clean place.

Dismantling:

First remove the delayed filling chamber when fitted (23) byundoing the securing bolts (25). To disconnect the chamber from its casing, insert and tighten the two bolts (25) in the two specially provided forcing-off holes. Note relative position of the balance weights and remove bolts(18). By means of the forcing-off holes drilled in the impeller flange, disconnect the impeller from its casing (4).

Then disconnect the casing (4) from the shaft/runner assembly (3). In general, bearings(8) and (9) remain in position on the shaft. If duie for replacement, they can be removed by means of bearing puller. Remove seals (7) and (29) taking great care not to damage the polished sealing surfaces on the shafts.

Reassembly is carried out by reversing the order of operations. Certain precaustions must be taken:

1⁰) Mating surfaces perticularly between chamber and casing and between casing and impeller, must be throughly cleaned with trichlorethylene to remove all traces of sealing compound. For perfect seals, CURTYLON compound is recommended.

2⁰) Check that there is no damage to the polished section of the shaft where seal rings (7) and (29) are fitted.

3⁰) Fit the seal rings (7) and (29) in position by means of a press-fitting tool.

4⁰) Fill the space between the two seal ring rims with grase.

5⁰) During the assembly of the impeller (2) and the casing (4), the coupling serial numbers stamped on each of these components should be aligned for purpose of balancing.

N.B.: For traction coupling 420,480 and 584 PH, apply grease (SKF 65-2 or 65-3) to the needle bearing (50) and thespace between seal ring (52) and baffle (58).

4.SPARES

4.1 Ordering spares

1°) Consult general diagram for your coupling to find the reference number of the part required,eg. ball bearing, no. 8.

2°) Find the size and serial number of the traction coupling for which the spare is required. The serial number is stamped on the outside of the coupling, eg. coupling 420, number 55077.

3°) Order the spare by quoting as follows : Ball Bearing, reference

No. 8 for Coupling No. 55077.

4.2 Drawings

4.2.1 SIZES : 270-660 XR

N.B. : Size 270 has no delayed filling chamber(23)

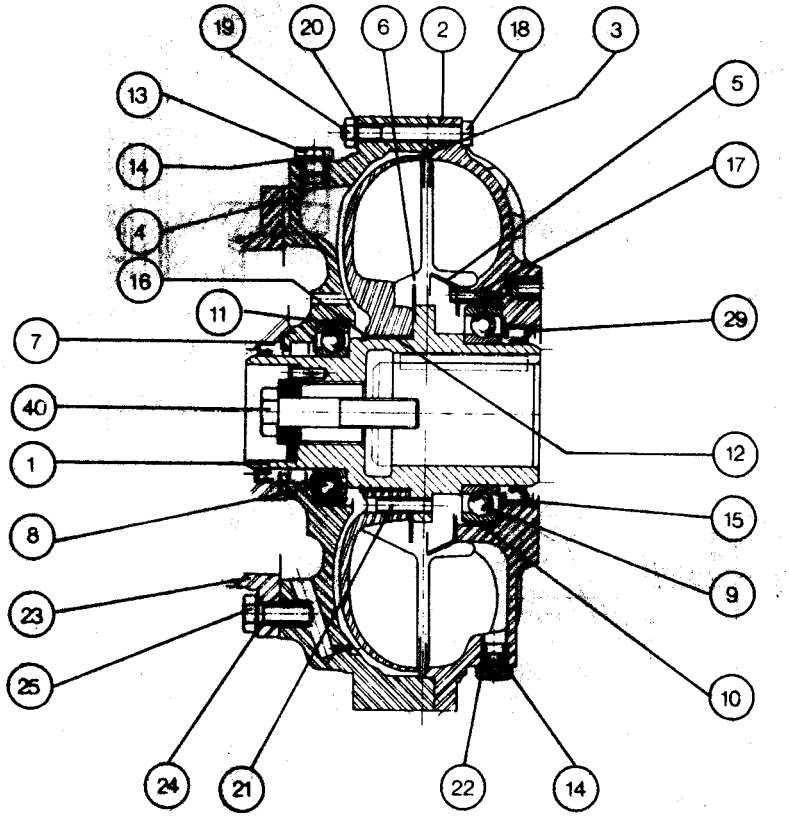

4.2.2 SIZES : 185-270 R

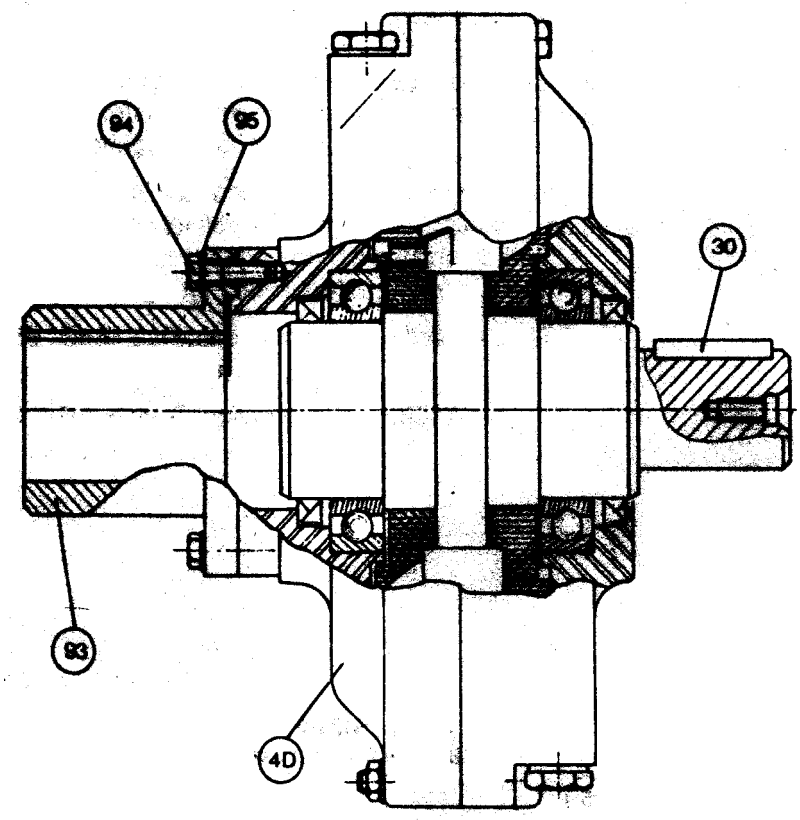

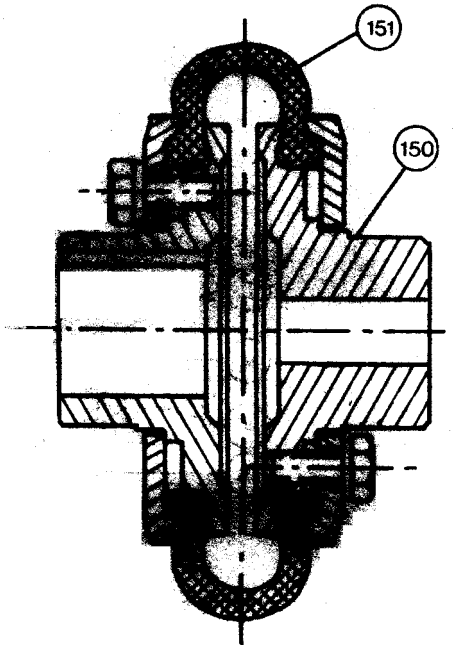

SIZES : 320-584 R

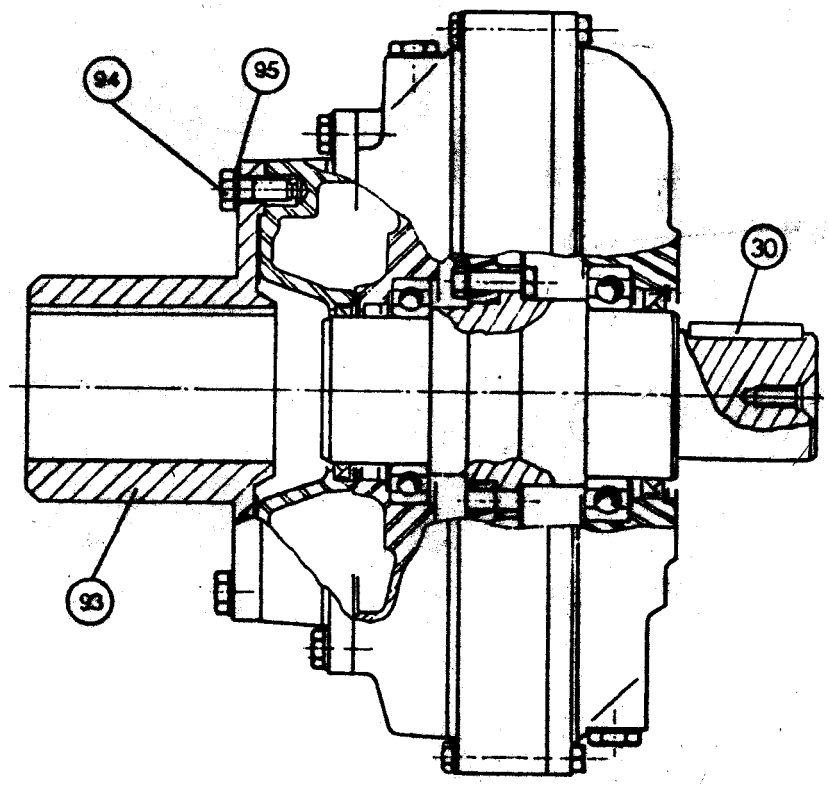

4.2.3 SIZES : 185-235 PHR AND PHM

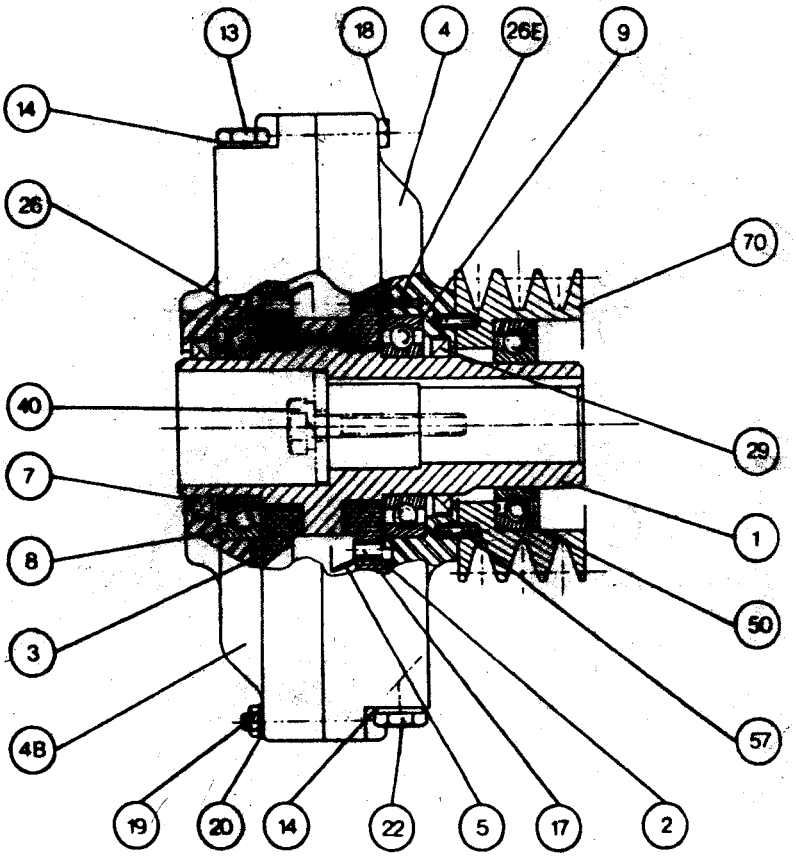

SIZES : 185-235 PHR AND PHM (LARGE BORE)

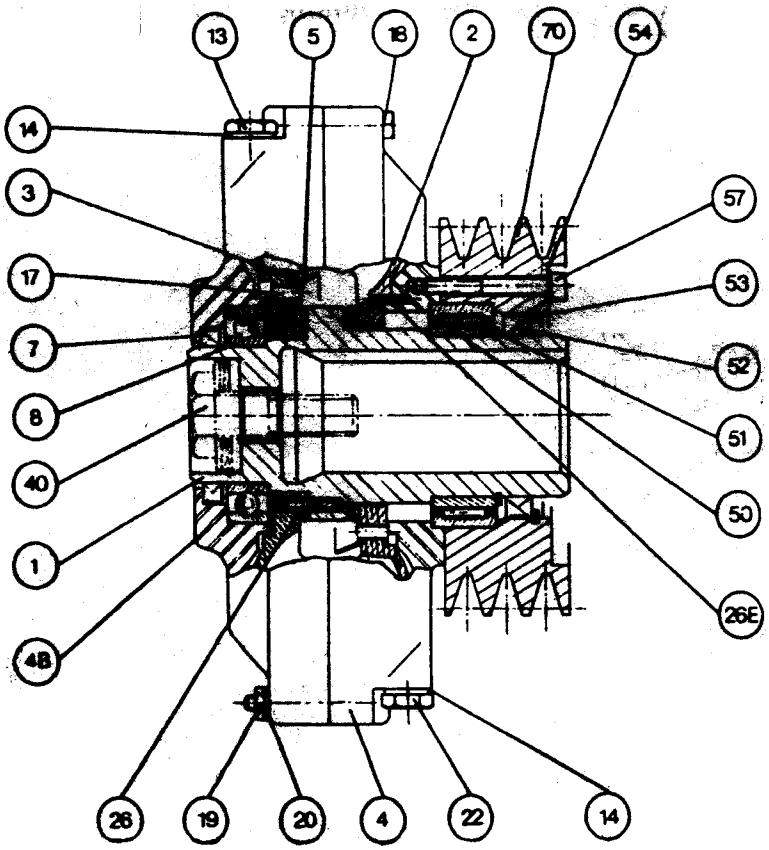

4.2.4 SIZES : 270-370 PHR AND PHM

PHR Mounting

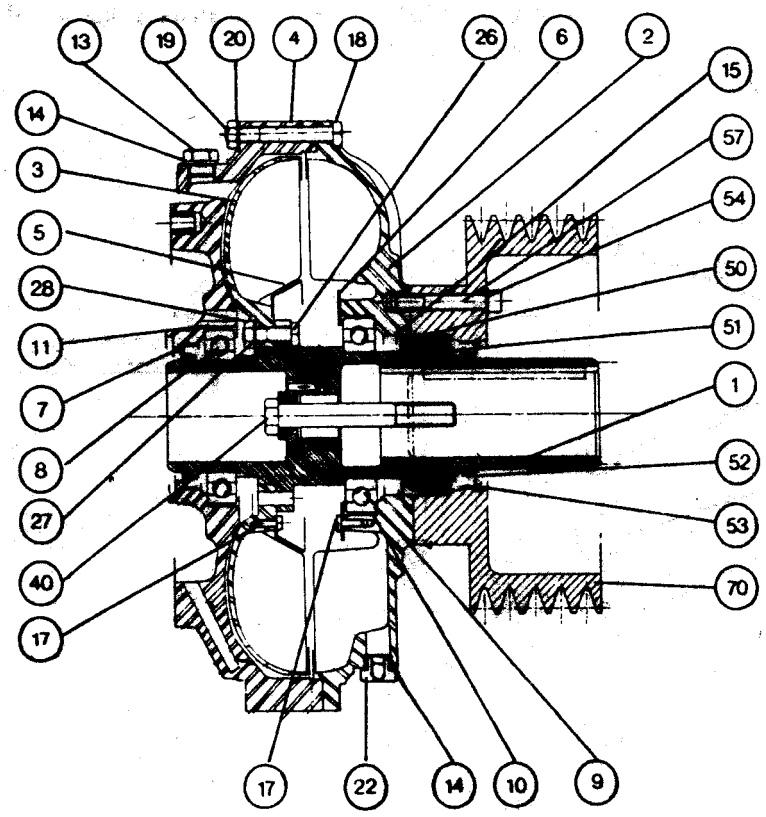

PHR Mounting

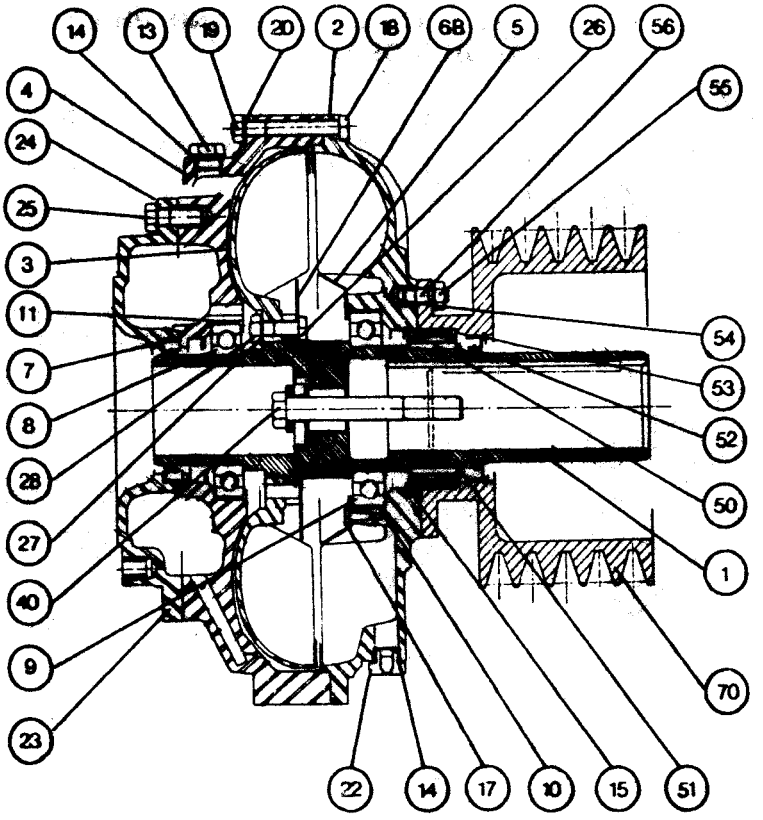

4.2.5 SIZES : 420-584 PHR AND PHM

PHR Mounting

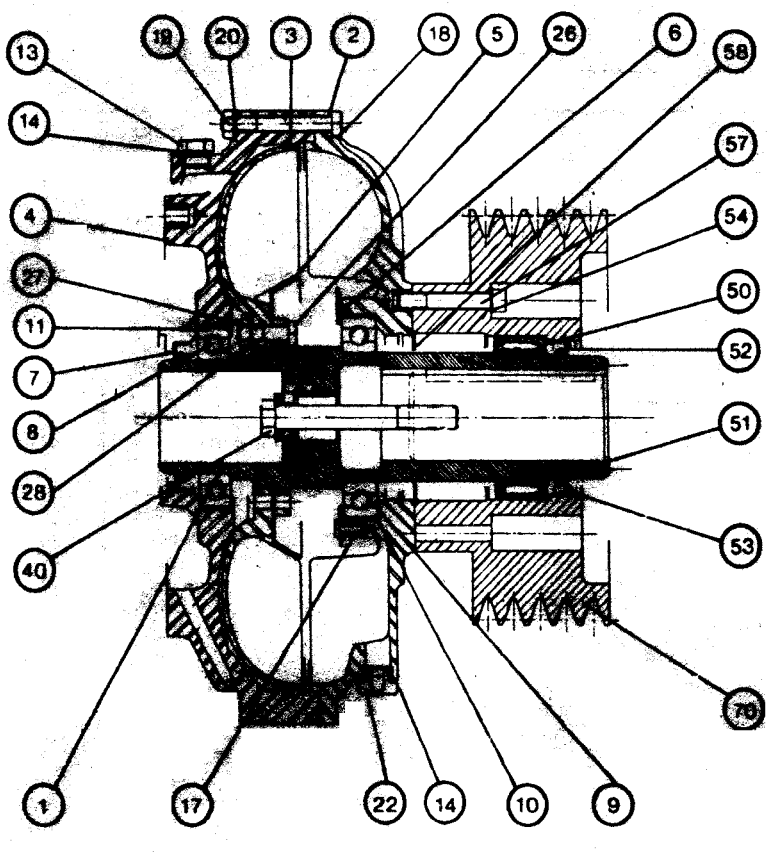

PHR Mounting

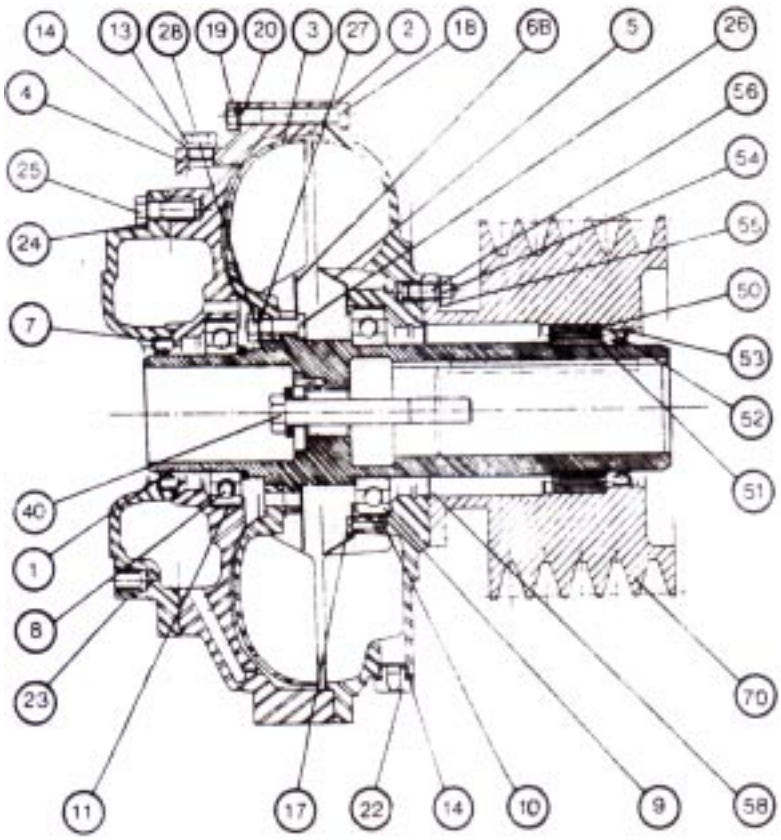

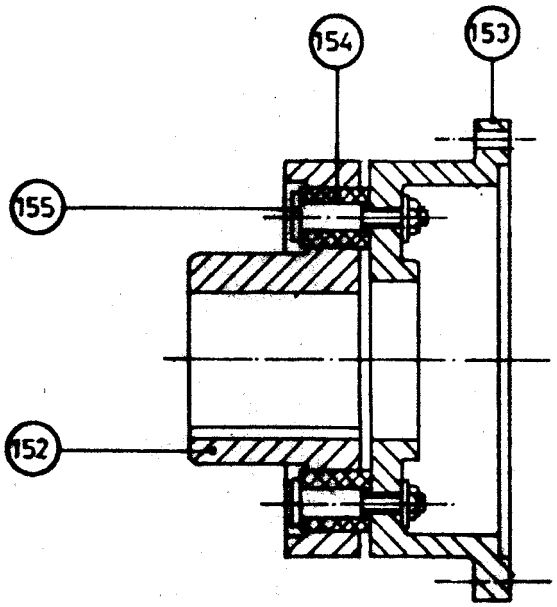

FCF Coupling

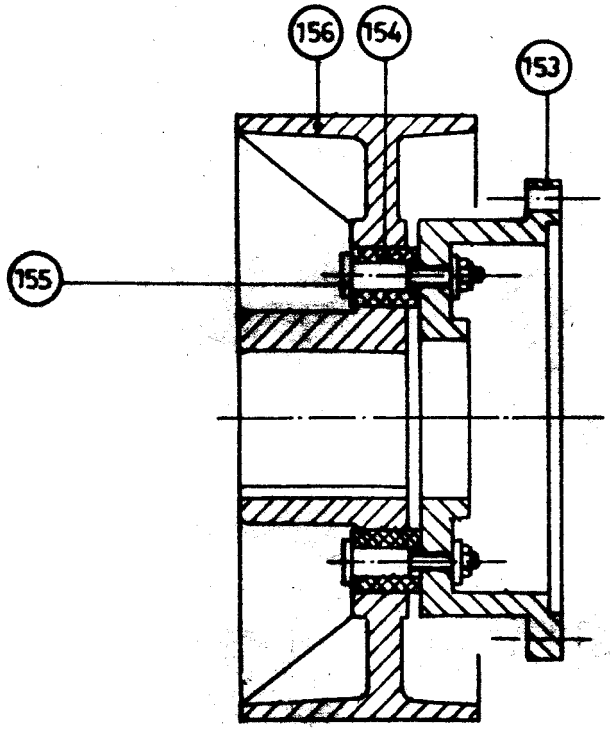

FCFB Coupling

● 4.3 Part List

Ref	Name of part
1	Shaft
2	Impeller
3	Runner
4	Casing
4B	Casing
4C	
4D	R Mounting Casing
5	Motor baffle
6	Runner Baffle (PHR)
6(B)	Runner Ballle (PHM)
7	Shaft seal
8	Bearing
9	Bearing
10	Flexible ring or collar
11	Flexible ring or collar
12	Flexible ring or collar
13	Filling plug
14	Fibre Washer
15	Stop ring
16	Stop ring
17	Baffle retaining bolt
18	Casing bolt
19	Nut
20	Lock washer
22	Fusible plug
23	Delayed filling chamber
23F	FLEX delayed filling chamber
24	Lock washer
25	Delayed filling chamber bolt
26	Runner bolt
26E	Circuit bolt
27	Lock washer
28	Nut
29	Shaft seal ring
30	Key
40	Retaining bolt assembly
50	Bearing
51	Stop segment
52	Shaft seal ring
53	Internal circlip
54	Washer
55	Nut
56	Stud
57	Pulley bolt
58	Grease reservoir baffle
70	Grooved pulley
80	
81	
92	Flange
93	Driving boss
94	Driving boss bolt
95	Washer
100	
110	
111	
120	
121	
130	
131	
140	
141	
150	PERIFLEX coupling
151	Rubber element
152	Driving half
153	Flange half
154	Rubber bush
155	Pin with hex nut & washer
156	Brake drum half

ELIGN GEAR COUPLING

INSTALLATION AND MAINTENANCE MANUAL

ELECON

Always a step ahead in technology

INSTALLATION & MAINTENANCE
ELIGN GEAR COUPLING

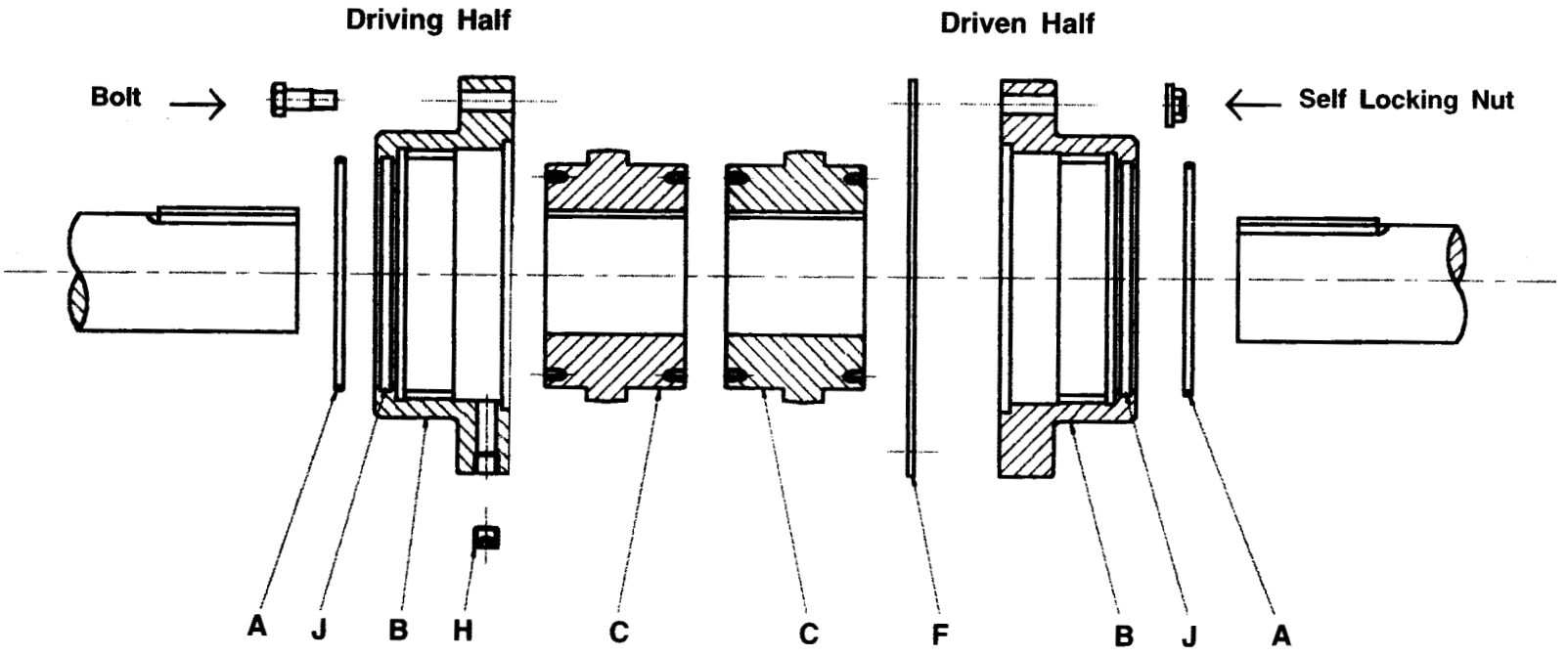

A – O-Ring

B – Sleeve

H – Lube Plug

C – Hub

F – Gasket

1. ASSEMBLING

1.1 Ensure all parts are clean.

1.2 Apply a light coat of grease to the O-Rings A and insert O-Rings into grooves J of sleeves B.

1.3 Place sleeves B over shaft ends. Care should be taken not to damage O-Rings A.

1.4 Install hubs C on their respective shafts with the longest hub end towards shaft end or towards machine bearing depending on the type (see page 5). If needed, uniformly heat hub c (max 120^0 C) to install them easily.

1.5 Install units to be connected in place and check the spacing N between hubs. See the tabulation (page 3) or approved drawing for correct hub spacing N, according to coupling type. In case of doubt, pl. consult us.

1.6 Align the two shafts, check alignment using a precise tools & measuring instruments / alignometer. Alignment precision depends on running speed (see page 6).

1.7 Coat hub & sleeve gearing with grease (see tabulation page 5) and slide sleeves B over hubs.

1.8 Insert gasket F and bolt sleeves together. Tighten bolts uniformly. See tabulation (page 4) for correct tightening torque (T Nm). Make sure that sleeve is freely sliding above hubs by axially displacing it to a value equal to N.

1.9 For the type ED, ES & ER remove both lube plugs H of one sleeve B and add grease in sufficient amount to overflow with lubricant holes in horizontal position. For the types ET & EV repeat this operation for the second sleeve. For quantity and quality of grease, see tabulation (page 5). Re-install the 2 plugs H. For type EV consult us.

2. MAINTENANCE

2.1 Every 3,000 hours.

Check that sleeves are freely moving axially : follow instruction as indicated in 1.8.

Fill up grease level : Proceed as mentioned under 1.9.

2.2 Every 8,000 hours or every 2 years.

2.2.1 Remove bolts and gasket F.

2.2.2 Control gearing and sealing.

2.2.3 Control alignment.

Type	N (mm)			
	ED	ES	ER	EV
130	3	-	5	8
280	3	-	5	5
500	3		5	12.5
1000	5		6	11
1600	5	5	6	13
2200	6	6	6.5	14
3200	6	6	6.5	15
4500	8	8	8	17
6200	8	8	8	20
8400	8	8	8	27
11500	8	8	10	34

Type	ED, ET, ER, EV		ED, ES, ET, ER, EV	
	Exposed Metrix Bolts		Pipe Plug	
	Tightening Torque	Socket Size	Plug Size	Key Size
	T(Nm)	(mm)	(inch)	(mm)
130	33.5	10	1/8” BSP	5
280	66	12	1/8” BSP	5
500	112	14	1/8” BSP	5
1000	277	19	1/8” BSP	5
1600	277	19	1/8” BSP	5
2200	537	24	1/8” BSP	5
3200	537	24	1/8” BSP	5
4500	537	24	1/8” BSP	5
6200	537	24	1/8” BSP	5
8400	537	24	3/8” BSP	8
11500	795	30	3/8” BSP	8

TYPES OF ELIGN COUPLINGS

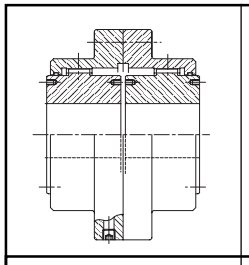	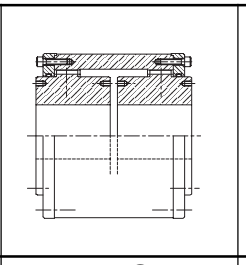	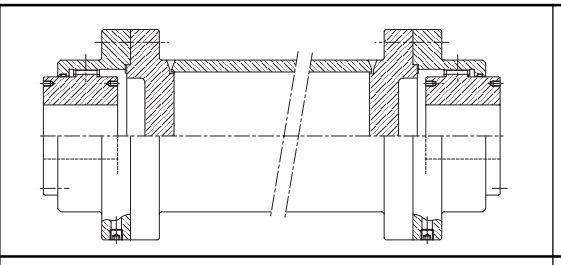	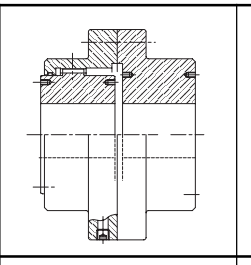	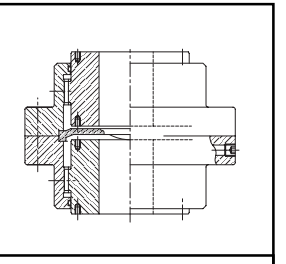
ED	**ES**	**ET**	**ER**	**EV**

RECOMMENDED LUBRICANTS & QUANITY

Lubricants : Grease :

Servogem Ep-2 of indian oil make or equi grade.

HP lithon EP-2 of Hindustan Petroleum Make or Equi. Grade

QUANTITY

Type			QTY. (dm^3)		
	ED	ES	ET	ER	EV
130	0.047	-	2 x 0.025	0.025	2 x 0.021
280	0.074	-	2 x 0.037	0.037	2 x 0.037
500	0.131	-	2 x 0.065	0.065	2 x 0.057
1000	0.207	-	2 x 0.105	0.105	2 x 0.104
1600	0.362	0.362	2 x 0.180	0.180	2 x 0.164
2200	0.522	0.522	2 x 0.260	0.260	2 x 0.254
3200	0.796	0.796	2 x 0.400	0.400	2 x 0.387
4500	0.976	0.976	2 x 0.490	0.490	2 x 0.514
6200	1.513	1.513	2 x 0.760	0.760	2 x 0.741
8400	2.017	2.017	2 x 1.010	1.010	2 x 0.940
11500	2.429	2.429	2 x 1.210	1.210	2 x 1.120

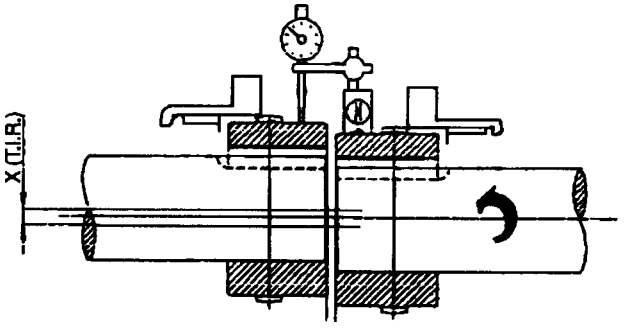

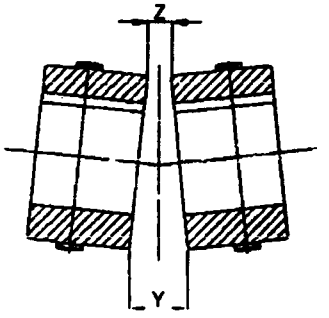

Types ED, ES, ET, ER, EV	SPEED (rpm)									
	0-250		250-500		500-1000		1000-2000		2000-4000	
	X max (mm)	(Y-Z) (mm)	X max (mm)	(Y-Z) (mm)	X max (mm)	(Y-Z) (mm)	X max (mm)	(Y-Z) (mm)	X max (mm)	(Y-Z) (mm)
130 - 100	0.25	0.25	0.25	0.25	0.25	0.25	0.15	0.20	0.08	0.10
1600-6200	0.50	0.60	0.50	0.60	0.25	0.35	0.15	0.20	0.08	0.10
8400-11500	0.90	1.00	0.50	0.75	0.25	0.35	0.15	0.20	-	-

ELECON EPC PROJECTS LIMITED

THRUSTOR OPERATED JAW BRAKE

ELECON EPC PROJECTS LIMITED

THRUSTOR OPERATED JAW BRAKE

1) TRAVEL DRIVE

Brake	**: Thrustor operated jaw brake Suitable to 200 Dia. x 75 face Brake drum**
Brake Lining	**: FERODO HG1 / CR-2**
Braking Torque	**: 19 Kg.m. (With 6 Nos. Additional wt. Plates)**
Additional wt. Plate	**: 2 Nos.**
Make	**: Elecon**
Thrustor Type	**: ET 240 / EHT050018**
Drg. NO.	**: 29-191/W Sr.No. 02**

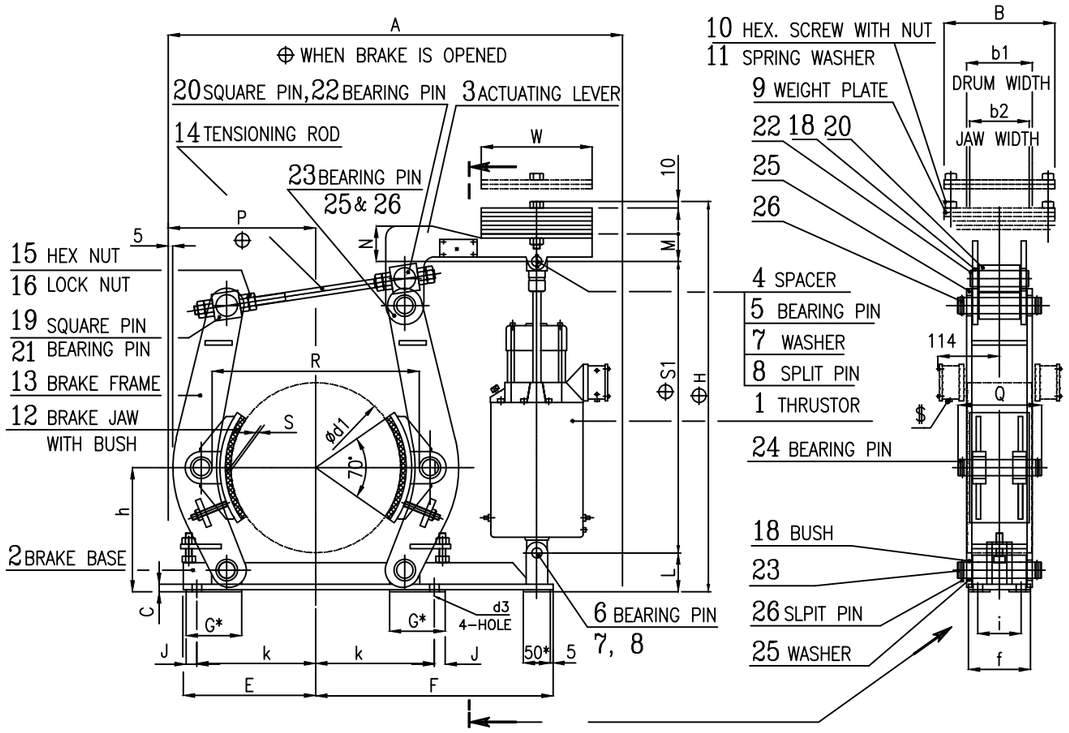

1	2	3	4	5	6	7	8	9	10	11	12	13	14	15	16	17	18	19	20	21	22	23	24	25	26	27	28	29	30	31	32	33
Sr. No.	DRUM SIZE	THRUSTOR TYPE	TORQUE DEVELOPED BY BRAKE						S	S1			h	A*	B	C	E	F	G	J	L	M	N	P	k	i	f	b2	d3	Q	R	
	d1xb1		MINIMUM TORQUE kg.m.	ADDITIONAL TORQUE PER Wt. PLATE kg.m.	MAXIMUM Nos. OF ADD. WEIGHT PLATE	SIZE OF ADD. Wt. PLATE THK x B x W	WEIGHT OF EACH ADD. WT. PLATE Kg.	MAXIMUM TORQUE Kgm.		WHEN BRAKE IS OPENED	INITIAL	RESETTING		WHEN BRAKE IS OPENED										WHEN BRAKE IS OPENED				WIDTH OF JAW & LINER PLATE	FIXING HOLE DIA.	PIN LENGTH		TOTAL WT. WITHOUT ADD. WT. PLATE Kg.
1	160 x 60	ET-240	1.5	1.8	6	8 Thk x 205 x 205	2.6	12.3	1.00	421	398	376	130	535	205	6	140	290	00	00	30	35	35	150	120	55	90	55	14	91	192	28
2	200 x 75	ET-240	2.2	2.8	6		2.6	19.0	1.00	421	393	376	160	630		10	165	345	00	00	34	35	51	192	145	55	90	70	14	110	244	35
3		ET-275			12			35.8		521	493	476		655							40		35									46
4	250 x 95	ET-240	2.8	3.4	6		2.6	23.2	1.25	421	387	376	190	705		14	205	385	98	20	47	50	88	225	180	65	100	90	18	131	299	45
5		ET-275			12			43.6		521	487	476		730							44	35	35									54
6	315 x 118	ET-240	4.2	4.0	6		2.6	28.2	1.25	421	389	376	230	805		14	245	440	103	20	147	50	100	270	220	80	115	110	18	155	374	61
7		ET-275	5.7	4.0	11			49.7		521	489	476	230	830							72	48	85									73
8		ET-2100			16			69.7																								73
9	400 x 150	ET-275	6.8	4.7	11		2.6	58.5	1.6	521	483	476	280	975		14	300	535	122	25	127	48	98	320	270	100	140	140	22	204	465	108
10		ET-2100			16			82.0																								109
11		ET-3150	11.8	12.7	9	12 Thk x 250 x 300	7.1	126.1		595	558	526		985	250						60	53										122
12		ET-3250			15			202.3																								123
13	500 x 190	ET-3150	18.5	17.2	8		7.1	156.1	1.6	595	555	526	340	1170		18	365	640	135	35	215	65	122	400	325	130	170	180	22	261	576	179
14		ET-3250			15			276.5																								179
15	630 x 236	ET-3250	29.7	31.7	9	16 Thk x 290 x 300	10.9	315.0	2.0	596	548	514	420	1370	290	22	440	750	155	35	320	69	134	490	400	170	220	225	27	305	711	252
16		ET-5500	29.6	27.8	20			585.0		787	739	669		1400							141	67	122									272
17		ET-5650	32.9	31.7	26			857.1																								

- LINING MATERIAL " FERODO HG1/ CR-2 "
- RECOMMENDED MATING SURFACE (BRAKE DRUM)
  - a, FIRST PREFERENCE, GOOD QUALITY FINE GRAINED PERLITIC CAST IRON
  - b, SECOND PREFERENCE, FORGED OR COLD ROLLED WITH BRINELL HARDNESS OF 200 OR MORE
  - c, CAST STEEL IS NOT RECOMMENDED.
- RECOMMENDED OPERATING TEMPERATURE
  - a, MAXIMUM TEMP. 350° C,
  - b, MAXIMUM CONTINEOUS TEMP. 150° C,
  - c, MAXIMUM INTERMITTENT TEMP. 250° C

NOTES :-

1. ✳ THERE IS NO PADS IN CASE OF BRAKE DIA. 160 & 200 mm. i.e. SR. NO. 1,2 AND 3.
2. $ CONNECTION BOX POSITION FOR ET 240 THRUSTOR. THIS CAN BE KEPT EITHER SIDE.
3. TORQUE DEVELOPED BY BRAKE = MINIMUM TORQUE + (ADDITIONAL TORQUE PER WT. PLATE x No. OF ADDITIONAL WT. PLATE.)
4. ⊕H = L + ⊕S1 + M + (No. OF ADDITIONAL WT. PLATE x THICKNESS OF ADDITIONAL WT. PLATE) + 10 mm
5. REQUIRED No. OF ADDITIONAL WT. PLATE PER BRAKE SHOULD BE INDICATED IN CORRESPONDING MATERIAL LIST / ORDER PART LIST
6. TOTAL WT. OF BRAKE = TOTAL WT. WITHOUT ADDITIONAL WT. PLATE + (REQUIRED No. OF ADDITIONAL WT. PLATE x WT. OF EACH ADDITIONAL WT. PLATE)
7. " Elektromag " THRUSTOR TYPE ET & ME ARE SAME.
8. MAX. RUBBING VELOCITY 18 m/sec

ISSUE	DATE	AMENDMENTS
11	03.09.05	SR 18, 19 & 20 DELETED. FOR SR 18, REF. 29-191-SPR SR14
10	23.11.04	SR 18, 19 & 20 ADDED
9	18.01.03	DRAWING " REDRAWN " SR 15 WAS MISSING & SR15 16 17 WERE 16 17 18

THIS DRAWING IS THE PROPERTY OF ELECON ENGINEERING CO. LTD. LONAED TO THE RECIPIENT WHO AGREES THAT IT SHALL NOT BE GIVEN OUT. COPIED OR DUPLICATED FOR THE USE OF ANOTHER BUT USED ONLY BY THE RECIPIENT FOR THE PURPOSE OF MAINTAINING THE EQUIPMENT TO WHICH IT REFERS.

DRAWN	C.M.R. 13-05-02	
CHECKED		
APPROVED SEC.	C.M.Rajpura	
APPROVED MECH	13-05-02	
APPROVED STRU.	-NA-	
APPROVED ELEC.	-NA-	

THRUSTOR OPERATED JAW BRAKE

THRUSTOR-ELEKTROMAG BRAKE LINING - FERODO HG1/CR2

M/C No. ORDER NO. SCALE N.T.S.

ELECON

DRG. NO. 29-191/W

SHEET NO. OF ISSUE 11

ELECON EPC PROJECTS LIMITED

THRUSTOR OPERATED JAW BRAKE

Introduction:-

Elecon make thrustor operated jaw brakes are available in different varieties to suit specific requirements. The brake consists of

(a) Brake jaw
(b) Lever mechanism
(c) Thrustor

Brake Jaw:-

The brake jaw (12) are fabricated construction and easily removable from hinge. Lining material is bonded to the jaw.

Lever Mechanism:-

Two brake jaws (12) with lining are hinged to brake frame (13) by means of pins (24). These two levers are secured to base (2) by means of pins (23), and connected to each other through tension rod (14) and actuating lever (3) by means of pins (21, 22 and 23). Thrustor (1) is mounted on base by means of pin (6) and connected to actuating lever by means of pin (5).

Thrustor:-

For operation, installation, maintenance manual and spares list of thrustor, refer separate catalogue in this manual.

INSTALLATION :-

Mounting Details:-

Generally, all Elecon make thrustor operated jaw brakes are supplied in assembled condition and weight plates separately. Brake is packed in such a way that there is no undue movement of levers.

When brake is to be mounted on the drum at open side (e.g. drum mounted on shaft at non-driving side of motor with double extension shaft), slide the brake over the drum after slackening the nut (15) and lock nut (16) sufficiently.

When brake is to be mounted on drum already fitted in between any two units of drive, remove pin (23) and lift arm (13) from bottom hinge as shown, slide the brake base (2) under

the drum, then put back the lifted arm in position, insert pin (23) and fit it with washer (25) and cotter pin (26).

Alignment:-

Mount the brake in such a way that brake linings are accurately centered over drum. Provide seams if required. Ensure correct center height and symmetry.

Mounting of Thrustor :-

Fill up the oil (recommended by supplier) upto the level indicated. Mount thrustor as shown in the drawing attached. Connect it to the supply through suitable flexible cables/conduit. Energise the thrustor several times keeping jaws sufficiently open.

Setting of Shoe Clearance :-

Keep the shoes (i.e. jaws with lining) closed on the brake drum and adjust nut (15) and lock nut (16) (left-hand top) such that dimension S1 initial is achieved. (Refer column No. 10 of the drawing).

Now, energise the thrustor to open fully or lift actuating lever (3) in its upper most position (i.e. dimension S1 maximum), to create clearance between brake drum and shoes. Make this clearance equal on both sides by adjusting screw and nut marked “X’’. Also make this clearance uniform through out curvature of shoes by adjusting screw and nut marked “Y”. Ensure that the initial shoe clearance “S” (as indicated in the drawing) is achieved.

After setting all these adjustment ensure all lock nuts are tightened properly.

Torque Adjustment:-

Details of number of weight plates and torque developed by brake are given in the drawing attached. However, number of weight plate can be changed practically, if required. This should be carried out only after installation of all associated equipments/accessories. It is to be noted that maximum weight plates should not exceed than the weight plates given in column No. 8 of the drawing.

Operation:-

When thrustor is energised, it lifts dead weight, so thrustor lug goes up and both jaws go apart as a result of movement transmitted through lever mechanism. Thus necessary gap occurs between brake drum and jaws and brake drum is released. Now when electric supply to the thrustor is cut-off, thrust will not be produced by the thrustor and thrustor lug goes down. Now under action of dead-load jaw arms press the jaws against surface of the brake drum and friction occurs between them. This creates necessary braking torque.

Well aligned (for center line of shoe and drum) brake produces uniform pressure between jaws and brake drum without any undue forces and brake works without jerks and shocks.

Inspection and Storage:-

- ⇨ Thrustor operated Jaw brakes are supplied in assembled condition but without weight plates.
- ⇨ Ensure type, size and quantity of brake, weight plates and thrustors are as per drawing attached and all parts are as per part list. Any deviation should be reported immediately.
- ⇨ Also ensure type and quantity of oil received is as per recommendation by thrustor manufacturer.
- ⇨ Careful handling is necessary to prevent any damage. Do not drop the brake or thrustor. Do not keep underneath a load, which can damage it.
- ⇨ Brakes, thrustors and oil-cans should be kept in a covered place and protected from dirt, dust, direct sun-light and water.

MAINTENANCE :-

Adjustment for Lining Wear :-

The brake lining fitted to the brake jaws have good wear resistance property. It is however, essential to check the brakes for lining wear at regular intervals.

As lining wear occurs, shoe clearance increases and dimension S1 (jaws in closed position) diminishes gradually. Brake should be re-adjusted when the dimension S1 (jaws in closed position) reaches to resetting value (Refer column No.11 of the drawing).

Resetting of shoe clearance should be carried out as given above under title “setting of shoe clearance”.

Brake Shoe Replacement :-

If spare shoes complete with brake lining are kept in stock they can be replaced in few minutes when lining in use wears out to the limit indicated in the drawing.

To change a shoe, first release brake by keeping actuating lever (3) in up position or by slakening the nut (15) and lock nut (16) sufficiently. Remove jaw pivot pin (24). Rotate the shoe by approx. 45 degree upward and withdraw the shoe horizontally. Replace it with a newly lined one.

Lubrication:-

For the successful and continuous operation of brake it is essential that various component should move freely. For this, self lubricated bushes are provided on all vital hinge points. However, during assembly hinge points without bushes (i.e. both hinge points of thrustor) are well lubricated. Few drops of light oil should be applied to these two points as well as threaded parts whenever the brake is examined and adjusted.

PERIODIC INSPECTION/CHECKS :

i) Daily Check:-

Check and ensure that all thrustors are lifted and brakes are released fully.

ii) Weekly Check:-

Check the brake linings for any wear, if any damage is found, replace it.

iii) Monthly check:-

Check that the brake drum surface must be free from grease, oil and other material and check the lining wear. If it is worn out up to 3 to 4 mm, please replace it.

Important Notes :-

The brake drum surface must be free from grease oil and other material.

Check the lining wear regularly.

Replace shoe before lining wears up to limit indicated in the drawing. Otherwise serious damage to the drum may occur.

For replacing shoe/lining, contact Elecon. Wrong lining will cause a problem of over-heating of brake drum and variation from specified braking torque rating.

When new brake linings are fitted it is desirable not to use brake to the maximum torque initially.

Recommended Spares:-

(1) Brake shoe

(2) Brake liners Ferodo HG-1

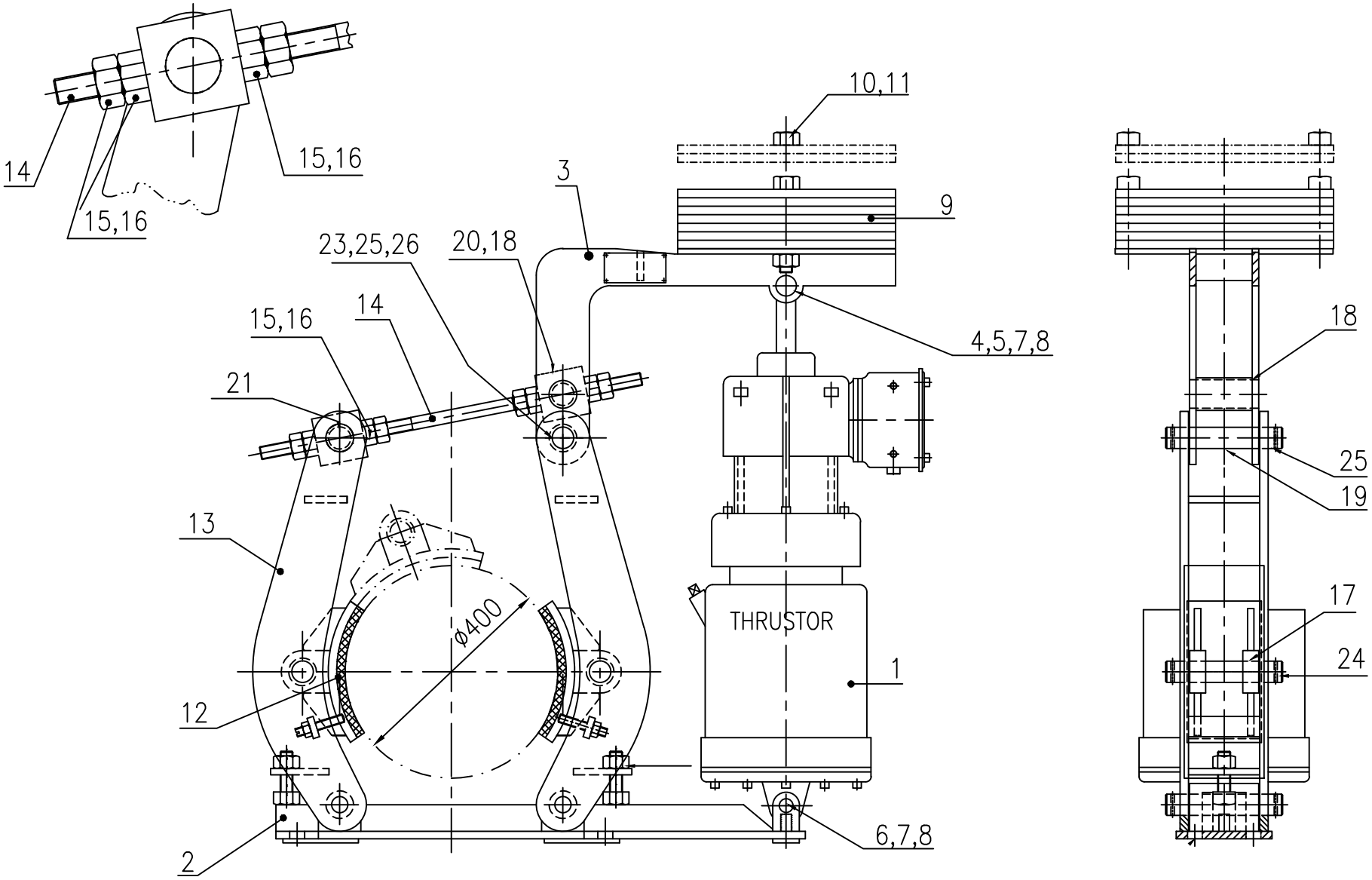

G.A. OF THRUSTOR OPERATED JAW BRAKE

ELECON EPC
ELECON EPC PROJECTS LIMITED

SPARE PART LIST FOR THRUSTOR OPERATED JAW BRAKE		
SR. NO.	**NAME OF PART**	**QTY.**
1	ELECTRO HYDRAULIC THRUSTOR	1
2	DETAIL OF BRAKE BASE	1
3	DETAIL OF ACTUATING LEVER	1
4	SPACER	2
5	BEARING PIN	1
6	BEARING PIN	1
7	MACHINED WASHER	4
8	SPLIT PIN	4
9	WEIGHT PLATE	*
10	HEX. SCREW	2
11	SPRING WASHER	2
12	DETAIL OF BRAKE JAW	2
13	DETAIL OF BRAKE FRAME	2
14	TENSIONING ROD	1
15	HEX. NUT	2
16	HEX. LOCK NUT	2
17	BUSH	4
18	BUSH	10
19	SQUARE PIN	1
20	SQUARE PIN	1
21	BEARING PIN	1
22	BEARING PIN	1
23	BEARING PIN	3
24	BEARING PIN	2
25	MACHINED WASHER	10
26	SPLIT PIN	10

ELECON EPC PROJECTS LIMITED

THRUSTOR

ELECON EPC PROJECTS LIMITED

THRUSTOR

1) TRAVEL DRIVE

Type & Size	**: EHT050018**
Thrust	**: 18 Kg.**
Stroke	**: 50mm**
Make	**: ELECON PERIPHERALS Ltd.**

ELECON PERIPHERALS LTD.

(Elecon Group of Companies)

Electro Hydraulic Thrustor

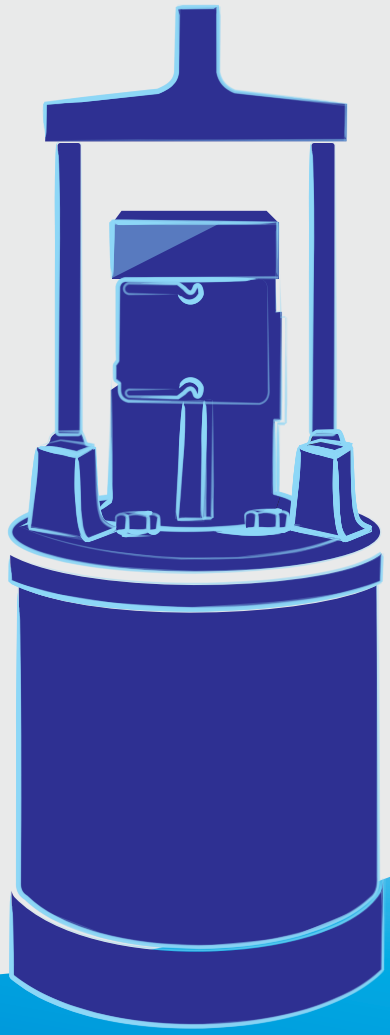

ELECON PERIPHERALS LTD.
Post Box # 43, Anand-Sojitra Road,
Vallabh Vidyanagar - 388 120.
Gujarat, India.
Phones : +91 (2692) 227960, 227971, 227972
Fax : +91 (2692) 236508
E-mail : info@epl.elecon.com

Introduction:

The “Electro Hydraulic thrustor” is the device which converts input Electrical signal in to linear motion. Hence it's also called “Linear Actuator”. This system mainly consists of 3 Phase Electric motor, motor operated impellor, Oil (transformer oil) as a working fluid and a Piston. Hence this system can be divided in mainly two parts,1) Electric Motor and 2) closed loop hydraulic system. By simply providing electric power, smooth constant force in linear direction can be produced. This linear and jerk free thrust can be used to operate several mechanisms i.e. Thrustor operated brakes, door shutters, damping systems etc.

Working Principle:

The impeller of the centrifugal pump driven by the motor generates a hydraulic pressure in the space under the piston. A hydraulic force is generated by the piston. Amount of force is dependent on Piston area and the pressure. Hence electrical power is converted in to the linier motion (of piston). Pressure is relived when motor is switched off (i.e. when there is the power failure). Piston comes at it's lower most position under the impression of counter weight or springs. (of mechanism on which Thrustor is mounted.)

Application:

One of the most common applications is the Thrustor operated Brake. In this application Thrustor is used to operate a Mechanical brake. Electrical power is used to rotate the impeller which in turn generates the hydraulic pressure by working on Oil hence to lift the piston. This smooth and jerk free thrust is either controlled by a appropriate stiff spring or counter weights of mech. brake. Brake shoes are operated by brake mechanism, which is operated by thrustor. Here Thrustor operated Brake acts as an important safety device.

Other Applications:

Lever actuation, Machine tools applications, Press machines, conveying equipments, lifting equipments etc.

Key Features :

- Easy to install & maintain
- Variable mounting position (Up to 10° inclination from vertical is possible)
- Maintenance free
- Long life
- Low power consumption
- Suitable for 415V, 3 phase, 50 Hz Connections
- Constant and Jerk free thrust
- Less heat generation hence long life for motor
- Totally enclosed hydraulic system
- Controllable power and return stroke
- Meets IP-55 degree of protection
- Tested at E.R.D.A., Baroda

Refer to the below cross section drawing describing major parts of thrustor.

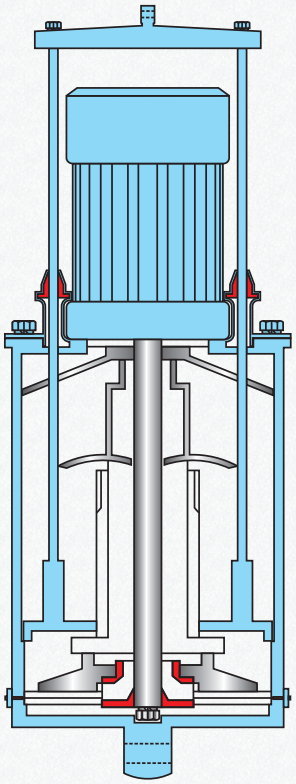

THRUSTOR DURING MOTOR IS SWITCHED OFF

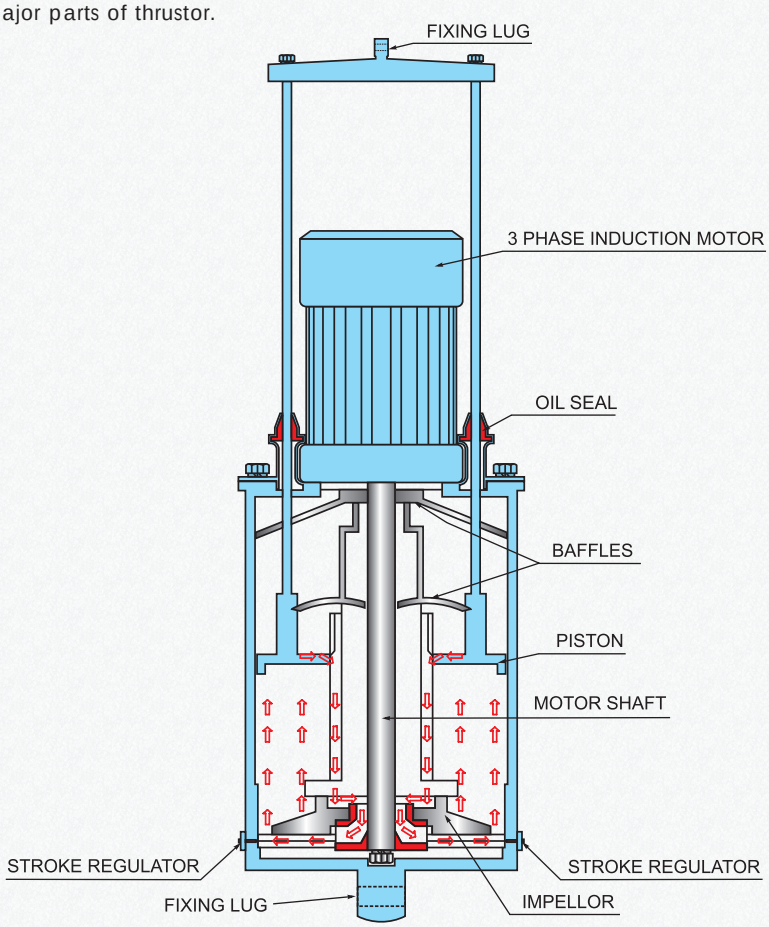

THRUSTOR DURING POWER STROKE

Electro Hydraulic Thrustor

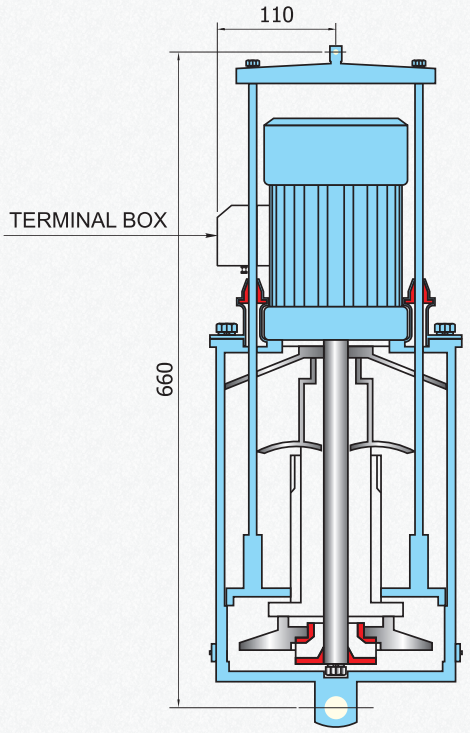

EHT127225

Sr. No.	TECHNICAL SPECIFICATION	EHT127225
01	LIFTING FORCE (Kgs.)	225
02	STROKE (mm)	127
03	MOTOR TYPE	3ph Induction Motor
04	MOTOR RATED POWER (kW)	0.600
05	SUPPLY VOLTAGE (V)	415
06	WINDING CLASS	F
07	OIL GRADE	Transformer Oil (viscocity : 17MM²/S)
08	OIL CAPACITY (Ltrs.)	7
09	NET WEIGHT (Kgs.)	63
10	GROSS WEIGHT (Kgs.)	68
11	LUGS HOLE DIA.	26
12	UPPER LUGS THK.	32
13	BOTTOM LUGS THK.	40

Sr. No.	TECHNICAL SPECIFICATION	EHT075114
01	LIFTING FORCE (Kgs.)	114
02	STROKE (mm)	75
03	MOTOR TYPE	3ph Induction Motor
04	MOTOR RATED POWER (kW)	0.375
05	SUPPLY VOLTAGE (V)	415
06	WINDING CLASS	F
07	OIL GRADE	Transformer Oil (viscocity : 17MM²/S)
08	OIL CAPACITY (Ltrs.)	4.5
09	NET WEIGHT (Kgs.)	45
10	GROSS WEIGHT (Kgs.)	47
11	LUGS HOLE DIA.	22
12	UPPER LUGS THK.	25
13	BOTTOM LUGS THK.	30

Sr. No.	TECHNICAL SPECIFICATION	EHT075068
01	LIFTING FORCE (Kgs.)	68
02	STROKE (mm)	75
03	MOTOR TYPE	3ph Induction Motor
04	MOTOR RATED POWER (kW)	0.375
05	SUPPLY VOLTAGE (V)	415
06	WINDING CLASS	F
07	OIL GRADE	Transformer Oil (viscocity : 17MM²/S)
08	OIL CAPACITY (Ltrs.)	4.5
09	NET WEIGHT (Kgs.)	45
10	GROSS WEIGHT (Kgs.)	47
11	LUGS HOLE DIA.	22
12	UPPER LUGS THK.	25
13	BOTTOM LUGS THK.	30

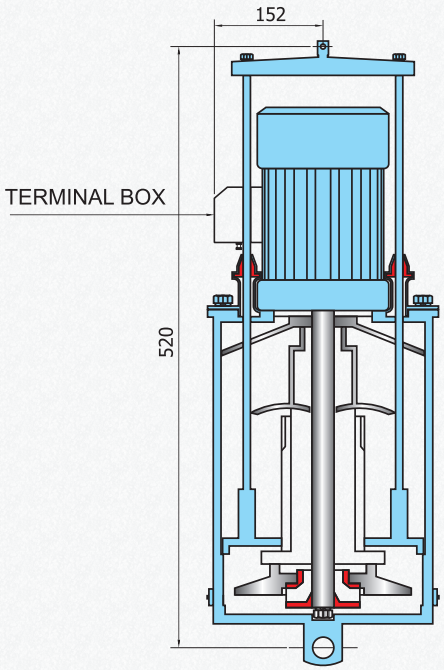

EHT075114

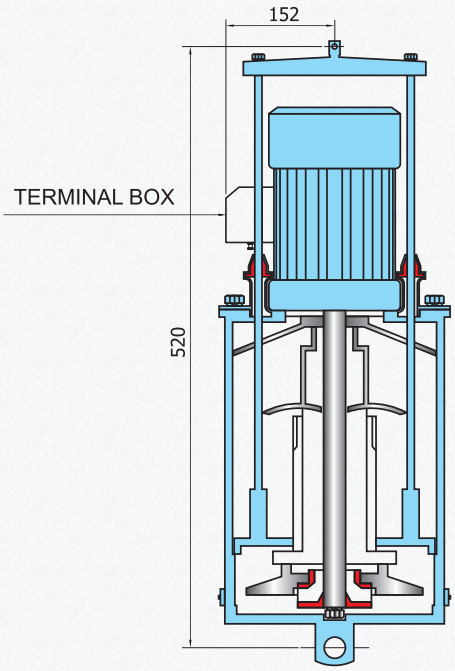

EHT075068

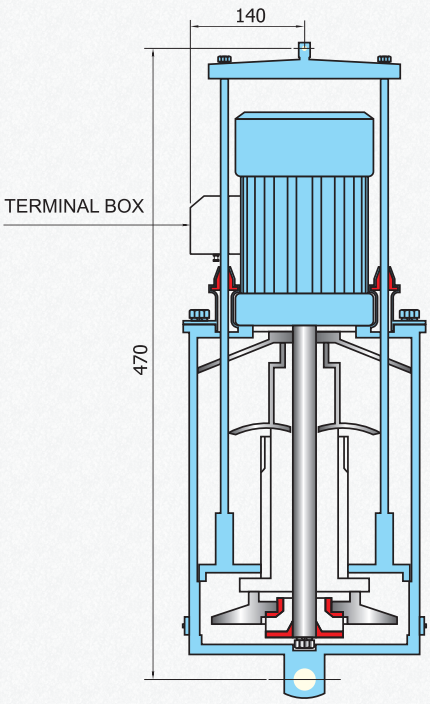

EHT050046

Sr. No.	TECHNICAL SPECIFICATION	EHT050046
01	LIFTING FORCE (Kgs.)	46
02	STROKE (mm)	50
03	MOTOR TYPE	3ph Induction Motor
04	MOTOR RATED POWER (kW)	0.250
05	SUPPLY VOLTAGE (V)	415
06	WINDING CLASS	F
07	OIL GRADE	Transformer Oil (viscocity : 17MM^2/S)
08	OIL CAPACITY (Ltrs.)	2.5
09	NET WEIGHT (Kgs.)	27
10	GROSS WEIGHT (Kgs.)	28.5
11	LUGS HOLE DIA.	20
12	UPPER LUGS THK.	20
13	BOTTOM LUGS THK.	27

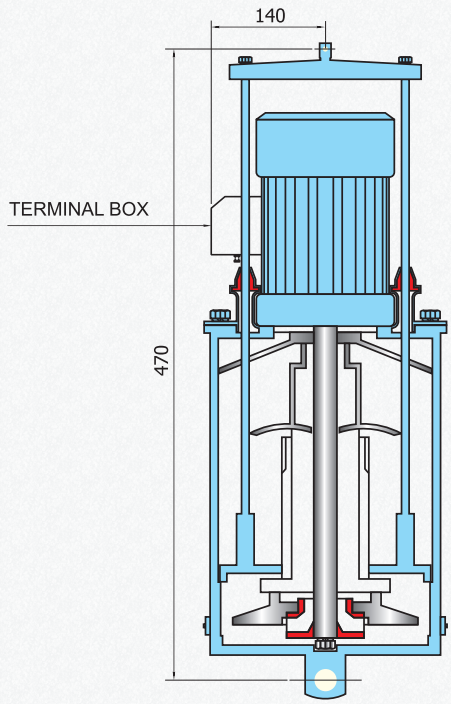

EHT050034

Sr. No.	TECHNICAL SPECIFICATION	EHT050034
01	LIFTING FORCE (Kgs.)	34
02	STROKE (mm)	50
03	MOTOR TYPE	3ph Induction Motor
04	MOTOR RATED POWER (kW)	0.250
05	SUPPLY VOLTAGE (V)	415
06	WINDING CLASS	F
07	OIL GRADE	Transformer Oil (viscocity : 17MM^2/S)
08	OIL CAPACITY (Ltrs.)	2.5
09	NET WEIGHT (Kgs.)	27
10	GROSS WEIGHT (Kgs.)	28.5
11	LUGS HOLE DIA.	20
12	UPPER LUGS THK.	20
13	BOTTOM LUGS THK.	27

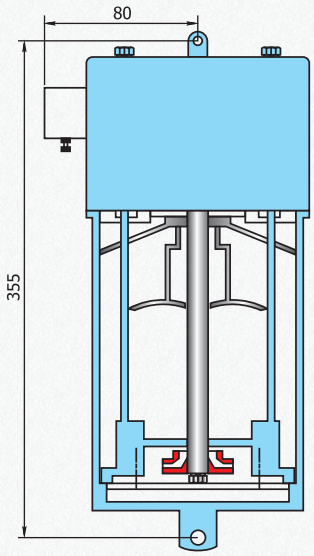

EHT050018

Sr. No.	TECHNICAL SPECIFICATION	EHT050018
01	LIFTING FORCE (Kgs.)	18
02	STROKE (mm)	50
03	MOTOR TYPE	3ph Induction Motor
04	MOTOR RATED POWER (kW)	0.150
05	SUPPLY VOLTAGE (V)	415
06	WINDING CLASS	F
07	OIL GRADE	Transformer Oil (viscocity : 17MM^2/S)
08	OIL CAPACITY (Ltrs.)	2
09	NET WEIGHT (Kgs.)	16
10	GROSS WEIGHT (Kgs.)	17.5
11	LUGS HOLE DIA.	20
12	UPPER LUGS THK.	18
13	BOTTOM LUGS THK.	18

Note : For non-standard product, contact us with technical details.

INSTALLATION AND MAINTENANCE MANUAL

01) **MAINTENANCE:** "EPL" make Electro Hydraulic Thrustors are almost maintenance free, however for smooth and quick thrust, guide rods must be properly cleaned time to time. While connecting thrustor to Mechanical brake, Pin joints must be lubricated enough for free movement. Further if thrustor is installed under open atmosphere, proper covering of thrustor is necessary to protect it from rain, dust and humidity.

02) **ELECTRICALS:** Thrustor motors are totally enclosed but it's necessary to cover motor portion if thrustor is installed in open atmosphere, to avoid damage from rain water. Motor winding is of "F" class. Motor is designed for operating under 415 volts, 3 Phase and 50 Hz Connections. For free and flexible movements, connecting wire must be at least 5 meters in length. As thrustor function is independent of motor/impellor rotation direction, wires can be connected in any sequence. How ever thrustor must not be turned ON without filling oil of proper proportion for safety of motor.

03) **OIL FILLING INSTRUCTIONS:** Fill the thrustor with good quality transformer grade oil. Fill the oil through upper oil filling plug until it over flows. For removing air (if any trapped) , run the upward and downward strokes manually for several times and if oil level decreases, fill the oil until oil overflows. Oil once filled will last for long time, however when it's required oil can be drained through bottom drain plug. While filling oil, thrustor must be held vertically. Improper amount of oil in thrustor will cause to insufficient pressure head, hence shorter stroke length. Ensure proper tightening of filling and draining plug after filling oil.

04) **MOUNTING:** Thrustor are mounted vertically on Mechanical brake, however maximum tilting of 10 degree is allowed while mounting. Thrustors are mounted on brake by means of pivot pin. For proper functioning, pin must be lubricated with oil and rust free before using.

05) **INSTALLATION:** Installing procedure of the thrustor in various systems may vary case to case, however for actuation of the thrustor only above mentioned electrical connection is needed.

SPARES AND IMPORTANT PARTS OF THRUSTOR

MOTOR: Motor of "EPL" make thrustor is totally enclosed and built with superior material under strict stage inspections. "F" class Insulation is used, hence motor can run even in higher ambient temperature.

BEARINGS: Grease filled bearing is used in driving motor and splash lubricated bearing is used in hydraulic system.

OILSEAL: Oils seals are provided at the thrust rod. Time to time dust removal is recommended from thrust rods to avoid wear of oil seal. A separate cover will work best in case of dusty atmosphere.

IMPELLOR: An aluminum cast centrifugal impellor spins in oil and develops pressure head to lift the piston, hence thrust of proper amount is generated.

TERMINAL BOX: All thrustors are provided with terminal box. Earthing stud is provided in the terminal box.

Note:- However "EPL" make thrustors meet IP-55 standard, for long and maintenance free life it's advisable to follow abovementioned instructions.

PRODUCT PROFILE

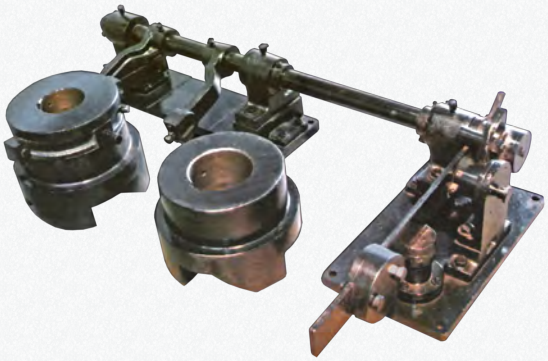

Over Riding Spiral Jaw Clutch

Centrifugal Brake

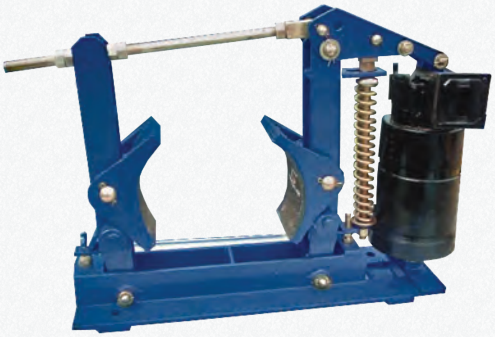

Electro Hydraulic Thrustor Brake

Electro Hydraulic Thrustor

MARKETING & SERVICING COMPANY

EMTICI ENGINEERING LIMITED

REGISTERED OFFICE :

Anand - Sojitra Road, Vallabh Vidyanagar - 388 120, Gujarat, INDIA Phones : +91 269 223 0168, +91 269 223 1125 Fax : +91 269 223 6508
Website : www.emtici.co.in

NATIONAL BRANCHES :

AHMEDABAD :
Phone : +91 79 26406683, 26406684, 26406685
Fax : +91 79 26401363
E-mail:sales@ahdemtici.elecon.com

BILASPUR :
Phones : +91 7752 247723, 247625
Fax : +91 7752 247720
E-mail : salesbil@bilemtici.elecon.com

INDORE :
Phone : +91 731 2558077
Telefax : +91 731 2558077

MADURAI :
Phone : +91 4549 293488
Fax : +91 4549 293468

NEW DELHI :
Phones : +91 11 23414340, 23414341, 23414069
Fax : +91 11 23709046
E-mail : salesdel@delemtici.elecon.com

ASANSOL :
Phones : +91 341 2305901, 2311726
Fax : +91 341 2302038
E-mail : salesasn@asnemtici.elecon.com

CHENNAI :
Phones : +91 44 24349237, 24349497, 24322455
Fax : +91 44 24349643
E-mail : salesmad@mademtici.elecon.com

JAMSHEDPUR :
Phones : +91 657 2361837, 2362376
Fax : +91 657 2464241
E-mail : salesjns@jmpemtici.elecon.com

MUMBAI :
Phones : +91 22 22821315, 22820725, 22821365
Fax : +91 22 22870791
E-mail : salesbom@bomemtici.elecon.com

PUNE :
Phones : +91 20 40191400
Fax : +91 20 40191420
E-mail : salespune@puneemtici.elecon.com

VADODARA :
Phone : +91 265 2312972, 23136701
Fax : +91 265 2312982
E-mail : salesbrd@brdemtici.elecon.com

BANGALORE :
Phones : +91 80 22260219, 22281834
Fax : +91 80 22281834
E-mail : salesbgl@bglemtici.elecon.com

DHANBAD :
Phones : +91 326 2230404
Fax : +91 326 2230490
E-mail : salesdhn@dhnemtici.elecon.com

KOLKATA :
Phones : +91 33 24761861, 24760876
Fax : +91 33 24761831
E-mail : salescal@calemtici.elecon.com

NAGPUR :
Phones : +91 712 6642600, 6642601, 6642602
Fax : +91 712 6642622
E-mail : salesnag@nagemtici.elecon.com

SECUNDERABAD :
Phones : +91 40 27844748, 27845250
Fax : +91 40 27848317
E-mail : salessec@secemtici.elecon.com

Manufactured by :

ELECON PERIPHERALS LTD.

(Elecon Group of Companies)

Post Box # 43, Anand-Sojitra Road, Vallabh Vidyanagar - 388 120, Gujarat, India.
Phones: +91 (2692) 227960, 227904, 227941, 227971, 227972
Fax : +91 (2692) 236508, E-mail : info@epl.elecon.com

Akaaish Printing & Stationery

ELECON EPC PROJECTS LIMITED

SHRINK DISC

ELECON EPC PROJECTS LIMITED

SHRINK DISC

1) TRAVEL DRIVE

Type & Size	**: 110-71**
Tightening Torque/screw	**: 59 Nm**
Quantity	**: 1 No per Gear box**
Make	**: Elecon**

2) SCRAPER CHAIN DRIVE (MAIN BOOM)

Type & Size	**: 220-71**
Tightening Torque/screw	**: 240 Nm**
Quantity	**: 1 No per Gear box**
Make	**: Elecon**

3) SCRAPER CHAIN DRIVE (AUXILIARY BOOM)

Type & Size	**: 140-71**
Tightening Torque/screw	**: 100 Nm**
Quantity	**: 1 No per Gear box**
Make	**: Elecon**

ELECON EPC PROJECTS LIMITED

INSTALLATION AND REMOVAL INSTRUCTIONS FOR SHRINK DISC

INSTALLATION: -

Shrink discs are supplied ready for installation. Therefore, they should not be disassembled prior to initial installation.

INSTALLATION SEQUENCE:-

1) Remove spacers placed between collars for protection during transportation.

2) Take any three locking screws forming the points of an equilateral triangle, as e.g. screw 1, 5 and 9 in fig. and tighten them slightly until the inner ring can still just be turned.

   Heavy tightening at this time can cause plastic deformation of the inner ring. Measure the gap between both collars at various points to insert equal spacing.

3) Slide shrink disc over the hub. The outside surface can be greased.

   Important:- Never tighten locking screws before shaft is inside the hub.

4) Degrease hub bore and shaft seat.

5) Insert shaft or slide hub over the shaft.

6) Tighten all locking screws gradually and all the way around (not in diametrically opposite sequence), see Fig.

   Several passes are required until all screws are torqued to the specified tightening torque (Ma).

   Check tightening torque (Ma) with a torque wrench.

   Both collars must remain equidistant.

ELECON EPC PROJECTS LIMITED

REMOVAL:-

Shrink disc removal procedure is similar to installation.

1. Gradual release of locking screws all the way around. Initially, each screw should be released about a quarter of a turn only. Thus tilting and jamming of collars will be avoided.
   Do not remove locking screws completely.

2. Remove shaft or pull hub from the shaft. Any rust formed on shaft in front of hub must first be removed.

3. Pull shrink disc from hub.

CLEANING AND LUBRICATION :-

Removed shrink discs need not to be taken apart or lubricated prior to reinstallation. Only a dirty shrink disc should be cleaned and lubricated. For the tapered surface one of following lubricants should be used.

Lubricant (Mo S2)	Type
Molykote 321 R (lube coat)	Spray
Molykote spray (powder spray)	Spray
Molykote G rapid Aemasol MC 19 P	Spray or paste
DIO-Setral 57 N (lube coat)	Spray or paste

Locking screws are lubricated with a multi-purpose grease as e.g. Molykote BR 2 or similar.

Damaged O- rings must be replaced

ELECON EPC PROJECTS LIMITED

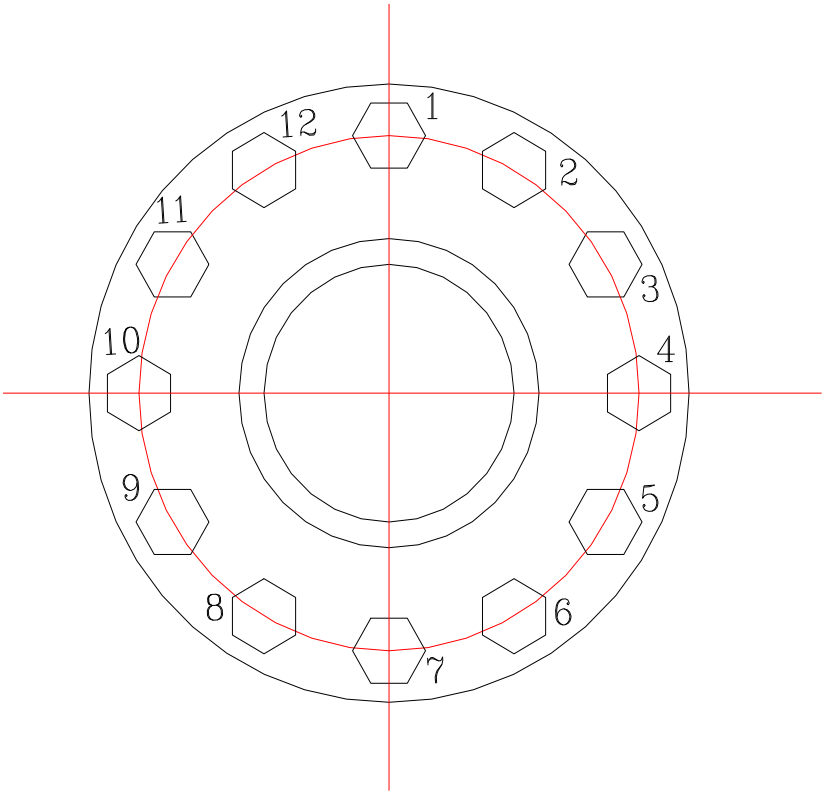

ELECON EPC PROJECTS LIMITED

SCRAPER CHAIN

ELECON EPC PROJECTS LIMITED

SCRAPER CHAIN

1) MAIN SCRAPER BOOM

Size	**: 250mm Pitch**
Type	**: Block Link**
Breaking Load	**: 50000 Kgs.**
R.H. Execution	**: 44 Mtr. (176 Nos. Links)**
L.H. Execution	**: 44 Mtr. (176 Nos. Links)**
Make	**: Rolcon**
Drawing No.	**: RC-12-4418**

2) AUXILIARY SCRAPER BOOM

Size	**: 250mm Pitch**
Type	**: Block Link**
Breaking Load	**: 50000 Kgs.**
R.H. Execution	**: 30 Mtr. (120 Nos. Links)**
L.H. Execution	**: 30 Mtr. (120 Nos. Links)**
Make	**: Rolcon**
Drawing No.	**: RC-12-4418**

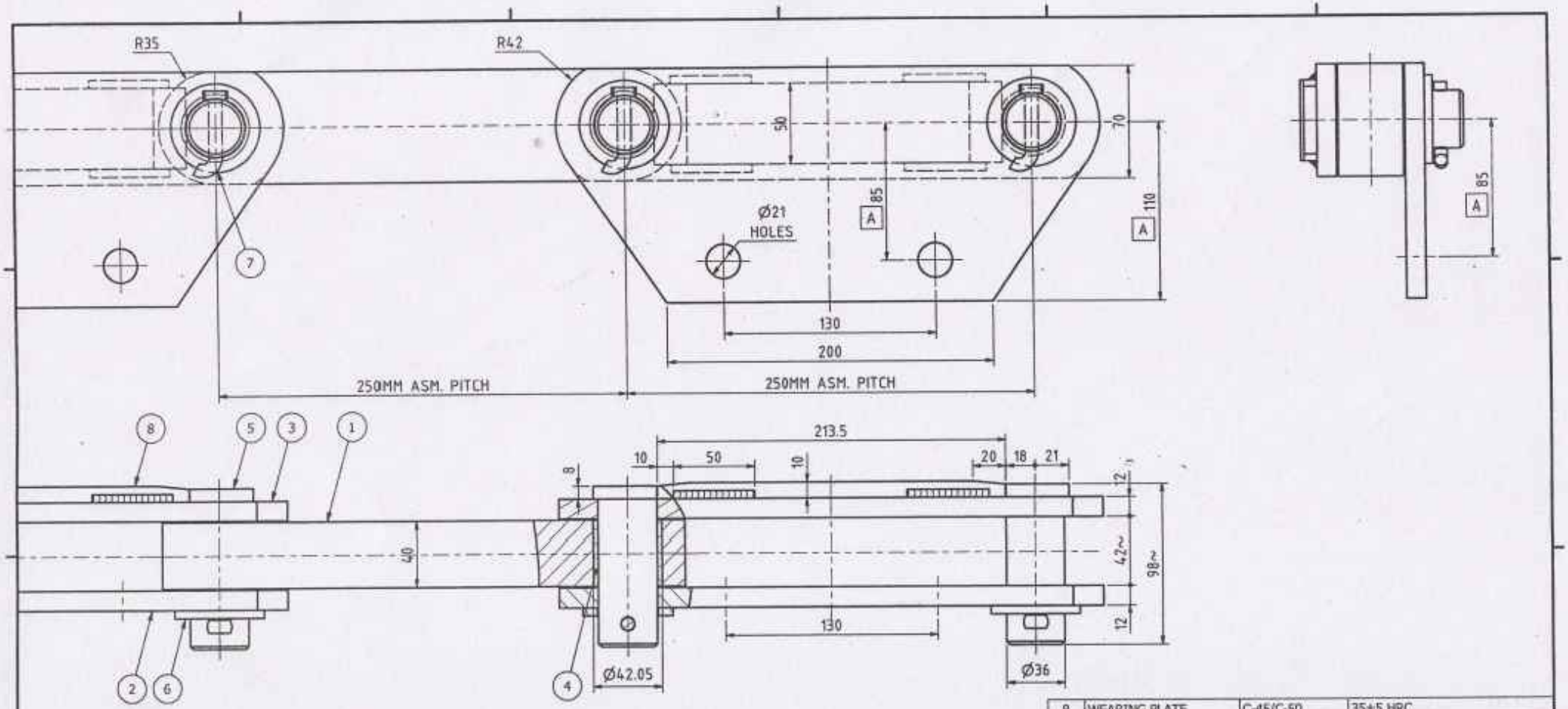

ITEM	DESCRIPTION	MATERIAL	TREATMENT
8	WEARING PLATE	C-45/C-50	35±5 HRC
7	COTTER PIN	M.S.	-----
6	WASHER	M.S.	-----
5	HEAD BOLT / PIN	16MnCr5/EN-19	CASE / INDUCTION HARD. TO 55±5 HRC, DEPTH 1.5 MM MAX.
4	BUSH / LINK BUSH	EN-45	42±5 HRC
3	OUTER LINK	C-45/C-50	35±5 HRC
2	ATT. OUTER LINK	C-45/C-50	35±5 HRC
1	INNER / CENTRAL LINK	C-45/C50 FORGED STEEL	35±5 HRC

NOTES :

1. TOLERANCE ON ALL THE DIMENSIONS WILL BE GIVEN TO SUIT THE PROPER CHAIN MANUFACTURING.
2. TOLERANCE ON PINS, BUSHES & ROLLERS SHOULD BE SUCH THAT THE MAX. CLEARANCE NOT TO EXCEED 0.4 M.M.
3. AVERAGE BREAKING LOAD OF THE CHAIN WILL BE- **50,000 KGS. (500 KN).**
4. ALL THE CHAIN WILL BE PRE LOADED AT 1/3rd OF THE BREAKING LOAD.
5. THE PERMISSIBLE LENGTH TOLERANCE IN ASSEMBLED CHAIN LENGTH 10'.0" WILL BE +0.25/-0.00 % AS PER ISO 1977/1.

(RC-12-2591)
ALL DIMENSIONS ARE IN M.M.

REF.: EECL, DRG# SCR. CHAIN/3.8.4

DRAWN	WORKS MANAGER	H.T. DEPARTMENT	Q.C. DEPARTMENT	Date
KIRAN PATEL				28/04/2012

ROLCON ENGINEERING CO. LTD.
POST BOX NO. 26,
ANAND SOJITRA ROAD
VALLABH VIDYANGAR - 388 120
GUJARAT, INDIA

250 MM PITCH BLOCK LINK TYPE SCRAPER CHAIN

DRG.# **RC-12-4418** | Revision **A** | Sheet 1 / 1

REV	DESCRIPTION	APPROVED	DATE
A	PARTY'S EMAIL ON DT. 19.09.2013 WITH DRG. COMMENT, MARK A DIMENSIONS CHANGED.		20/09/2013

ROL-KÖBO

QUALITY ASSURED FIRM ISO 9002 SGS

NATIONAL ACCREDITATION OF CERTIFICATION BODIES Registration Number 005

CERTIFICATE NO. 96/7916

Cert. No. 7F 0017

MANUAL FOR COMMISSIONING, MAINTENANCE & SERVICES FOR CHAINS & SPROCKETS

ROLCON ENGINEERING COMPANY LIMITED

ROLCON SPROCKET COMPANY

Regd. Office :
P. B. No. 20, Vallabh Vidyanagar - 388 120, Via. Anand, Gujarat, India.
Phone : (02692) 30766, 30866 • Fax : (02692) 36480, 36453
Telegram : ROLCON
E-mail : rolcon.VVN@gnahd.global.net.in
Website : www.rolconengineering.com.

INSTALLATION :

General Requirements

Shaft Alignment - Shaft must be rigidly supported in properly designed bearings. Shaft displacement will destroy the initial alignment and shorten chain and sprocket life. Align the shafts horizontally with a leveling device. Head and tail shafts must be parallel and at 90° to the direction of travel of the chain. Take-ups provided asmeans for shaft alignment and chain tension adjustment.

Sprocket alignment-Sprockets must be in a line and not offset on the shafts. Abnormal sprocket and chain sidebar wear will result if alignment is not maintained.

When multi strands of chain must operate as a unit, as in multi strands equipment, the sprocket teeth on the head shaft must be timed to pick up the load on each chain simultaneously, aligning the keyways in the shaft and strand then aligning the keyways of the sprockets, on tooth centerline, will assure the proper match. Sprockets should be ordered "keywayed-in-line and matched in pairs". Since the tail shaft is an idling shaft, it is usually keyed to only one sprocket. The other sprocket (s) is held in alignment by set collars and is allowed to turn freely. This permits the sprocket to position itself if uneven wear takes place in the chain strands.

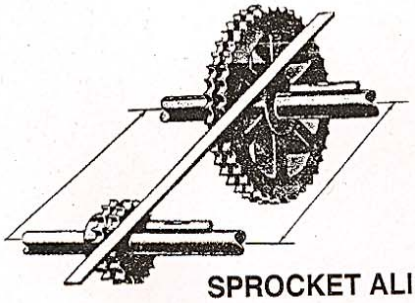

SPROCKET ALIGMENT

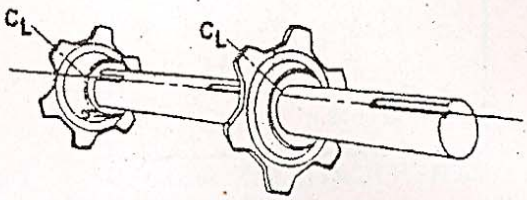

SPROCKETS KEYED IN LINE

Chain-Place the chain around the sprockets with the free ends meeting on one sprocket, when assembling straight sidebar chains, insert the connecting link and then the closing bar over the pins. Drive the closing bar onto both pins at the same time taking care not to bend the link. Most chains are designed with a "press—fit" between the pins and bars. Do not grind away a pin end so that it fits loosely in the chain sidebar.

If a multiple strand installation, where the chains must operate as a unit, be sure the chains are reasonably matched for equal length. Uneven loading may result, if they are not matched. Proper chain tension is essential. A chain that is too tight will cause an overtoad condition. A chain that is too loose may cause pulsations or interference, which result in abnormal chain and sprocket wear.

Freedom from interference-contact between the moving parts of the equipment and adjecent objects must not occur. Clearance should be provided to allow for normal chain sag and take-up movement. Guides and tracks should be smooth and free of foreign objects. Exit and entry points of guides and tracks must permit the chain to pass with a minimum amount of impact or interference.

Lubricants such as oil and grease should always be applied between the inner and outer linkplates on the side facing the chain Wheel. A periodic cleaning of the chain to remove abrasive elements, dirt and sticky materials will prolong the working life. In addition to the lubricants mentioned, dry lubricants may be employed for particular applications. Thease are generally sprinkled, Sprayed or brushed on before chain assembly.

(2) Assembly of Link Chains :

Link chains are generally joined by fastening links. Wherever possible, chains with an even number of links should be used, so that the chains begin and end with an inner link to be joined by a no. 10 straight connecting link. An uneven number of links will necessitate the use of a cranked link, which will adversely affect the breaking strength of the chain and decrease it by about 20%. When cutting continuous chain into specific lengths attention is to be paid that the outer link taken off must not be re-used. Chain Wheels must be in perfect alignment and should be fitted as close as possibe to the point of support. Care should also be taken that the shafts are parallel. As to the positioning of shafts an inclination of 60 degree to the horizontal is recommended. Vertically arranged centre drives necessitate constant tension adjustment to prevent the chain -from disengaging from the lower Wheel. Chain sag must not exceed 2% of the centre distance, and should be as little as possible on impulsive drives. Chain sag can be adjusted either by alteration of shaft centres, by retightening the tension station, or by adjusting the jockey or tension rail. Overtightening of the chain should be avoided, since, in addition to impeding an extra load on the bearings, this will lead to quick wear and noisy running. The tightener should have a tension-adjusting movement of at least 1.5 times the pitch to allow -for removal of a 2-pitch assembly.

(3) Chain Wheels :

Chain life depends in part, of course, on the correct construction and toothing of the Wheel. In general, the number of

teeth on driving Wheel is atleast 19. Jockeys and pinions used in secondary duty jobs may have a minimum of 13 teeth. For high-speed and impulsive drives it is recommended that the teeth be heat treated to increase wear resistance. Chain lap on the Wheels should not be less than 120 degree, and the transmission ratio of 1:8 should not be exceeded. The number of teeth on the wheels and the number of links in the chain should be correlated in such a way that the same roller will not, after each revolution, engage in the same tooth gap. In extreme cases, conveyor chains with large pitches and running at relaively low speeds will operate over Wheels with a minimum of 6 teeth.

Start-up

1. Adjust chain tension. On high temperature applications chain must be adjusted while cold.
2. Check equipment and surrounding area for tools, loose parts, etc., which might obstruct conveyor operation or create a safety hazard.
3. Jog equipment thru one complete cycle.
4. Start equipment and run with no load make certain that all chain Joints flex freely.
5. If the application permits the use of oil, lubricate each chain Joint well with a good grade of non detergent petroleum base oil. The oil should be applied between the sidebars at each Joint and be of a viscosity such that it will flow freely into the pin-bushing area. Grease may be used if it can be applied (forced) directly to the pin-bushing area. However, heavy grease applied to the outside will not flow into the Joint and may even act as a barrier to subsequent lubrication or trap contained materials inside the Joint.
6. A break-in running period of 8 to 12 hours, under no load, will normally allow the chain Joints to seat properly. It is normal for the chain to elongate slightly during this period. A final adjustment of the take-ups may be required.

OPERATION

Loading

1. Loading any equipment should be accomplished as gently as possible to reduce impact. The load should, if possible to reduce impact. The load should, if possible, be placed or slid onto the equipment to reduce surging caused by rough and irregular loading.
2. Unload a equipment before shutting it down. Starting a loaded equipment places extra strain on all the equipment.
3. A equipment should be run occasionally during extended shut down periods to keep the working parts of the system free from corrosion and in operating condition. Overloads and shortened life will result, if the system is allowed to bind up form corrosion.

MAINTENANCE

A chain like any other operating equipment, requires good maintenance to obtian long life and satisfactory performance. In the following paragraphs, it is assumed that : (1) the components of the system have been properly selected for the application; (2) the shafts, sprockets and equipment have been installed correctly; and (3) adequate lubrication has been provided.

Inspection Schedule

The major requirement is to establish a practical schedule and to follow it faithfully. Experience will indicate any need for changes in the Schedule. As with all new equipment, some readjustment may be required during the initial "break-in" period. Therefore, the initial schedule should provide for frequent inspections. After the system has been run-in, the time between inspections may be extended. Such changes should be made gradually as experience dictates.

INSPECTION ITEMS :

1. Lubrication - it has been shown that a separating wedge of fluid lubricant is formed in operating chain Joints much like that formed. Therefore, fluid lubrication must be applied to assure an ample oil supply to minimize metal to metal contact.

   Manual - Make sure the lubrication schedule is being followed, and that the oil is being properly applied.

   Drip - Inspect the filling of oiler cups and the rate of feed. Check that the feed pipes are not closed and are properly positioned over the chain.

   Bath - Inspect the oil level and check that there is no sludge. Drain, flush and refill the system as the application requires.

   If the chains have not been lubricated properly, the joints may have a brownish (rusty) color and the pins of the connecting link of the chain, when removed, may be discolored (light or dark brown). Also, the pins may be roughened grooved or galled.

   Properly lubricated chains will not show the brownish colour at the joints but will be brightly polished with a very high luster.

2. Wear on link plates and sides of sprocket teeth-such wear indicates misalignment.

Shaft and sprocket alignment-check shaft and sprocket alignment directly.

This check may reveal misalignment before wear on chains and sprocket becomes apparent.

4. Wear on working faces of sprocket teeth-check for wear on the working faces of the sprocket teeth. As the system runs in, these faces should develop a bright polished appearance. Scratches, galls, grooves or visible changes in tooth form are signs of trouble, probably caused by lubrication failure or overloading.
5. Chain tension should be checked and adjusted. Chain elongation-an elongation of as much as three percent indicates that the chain is riding near its limit of allowable height on the sprocket teeth.

   A gradual increase in chain length is the result of normal wear, A sudden increase in slack indicates one or more of the following :
   a. Lubrication failure;
   b. Excessive overloading or shock;
   c. Displacement of shaft bearings;
   d. Displacrment or failure of take-ups.
6. Inspect the chain periodically to be sure it is free from dirt, grit or other abrasive material. Clean out extraneous material from the chain, especially the kind that sets up or hardens. Even under the best operating conditions periodic cleaning of the chain is good economy. Gummed lubricant and the products of normal wear can cause rapid pin and bushing wear.
7. Guides, tracks and the area below the equipment should be inspected frequently for build up of material or dirt which will cause interference or binding of the chains. Exit and entry points of guides and tracks must permit the chain to pass with a minimum amount of impact or interference. If lubricated, check for proper lubrication. Roller chain tracks can be over-lubricated reducing the friction to the point where the rollers will slide rather than roll.
8. Exceptionally low chain speed coupled with high drag friction will occasionally cause surging. A slight increase in speed will correct this problem, if the friction cannot be reduced.

Additional Procedures :

New link in an old chain-Never insert a new link in a chain that has been appreciably elongated by wear. The pitch of the new link will be shorter than that of the other links, and the resulting shock, each time the link engages the sprocket, will reduce the life of the chain.

New chain on worn sprockets-Do not install a new chain on badly worn sprockets. A few hours operation under such condition can do more damage to the chain than months of normal use.

Storage of idle Chains and Sprockets

Unless properly protected, the components of equipment system deteriorate during long periods of idleness. If a chain is to be stored, remove it from the sprocket, clean and reoil it and cover it with heavy grease. Store the chain where it will be protected from moisture and mechanical injury.

The sprockets may be left in place on the shafts. Cover each with heavy grease and protect them -from mechanical injury.

Before placing the equipment in service again, thoroughly clean the chain and sprockets or remove the protective grease; then relubricate the chain.

Draw chain ends together and attach with connecting pin. Adjust take-ups to properly tension chain on equipment.

USEFUL FACT ABOUT LINK CHAINS

1) Lubrication of Link Chains :

After assembly and inspection every chain is pre-lubricated with a preservative, by immersion in a bath of hot oil, which penetrates to the working surfaces. However, once the chain is in operation the method of lubrication should be adapted to the chain speed. Mineral oil **SAE-40 to 60** and the following methods of lubrication are recommended for link chains :

V [M/S]		Method of lubrication
≦	4	by hand-either by means of a brush or from spout oil can
≦	12	drip lubrication - permanently - by drip oiler
≦	16	oil bath or splash lubrication - by slinger disc
≦	40	forced lubrication by circulating pump - perferably with autocool

ROL-KÖBO

SPECIAL PURPOSE CHAINS

1

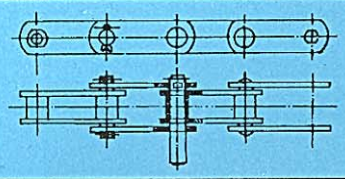

2

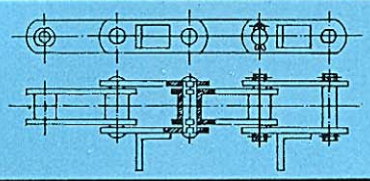

3

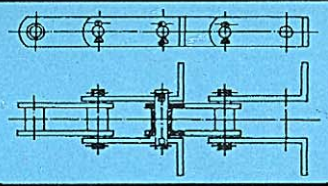

4

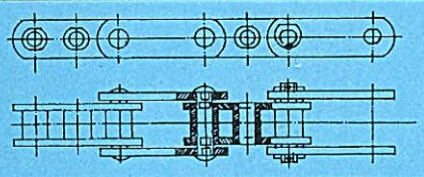

5

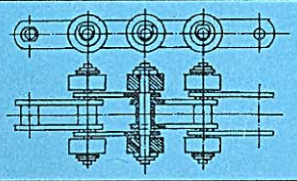

6

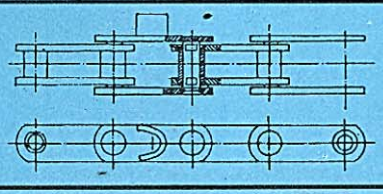

7

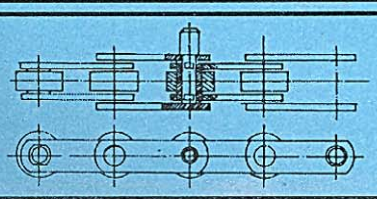

8

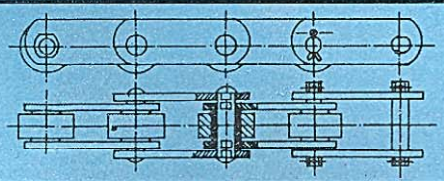

9

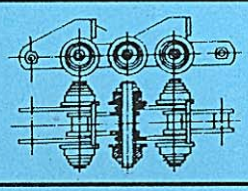

10

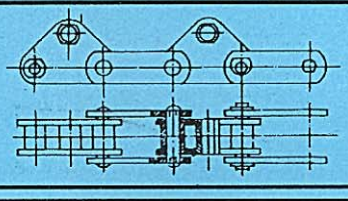

11

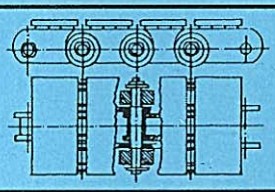

12

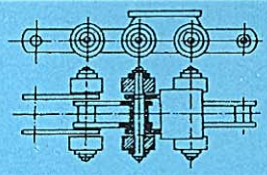

13

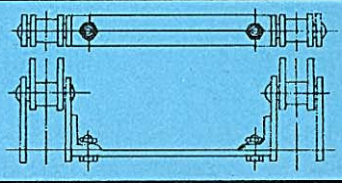

14

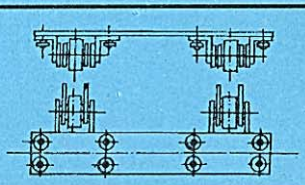

15

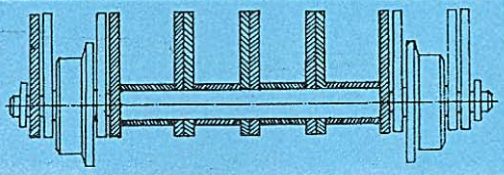

16

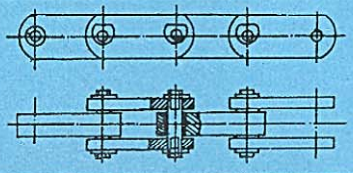

ELECON EPC PROJECTS LIMITED

ELECTRIC HOIST

ELECON EPC
ELECON EPC PROJECTS LIMITED

ELECTRIC HOIST

1) MAIN SCRAPER BOOM

Capacity	**: 3.5 Tons**
Type	**: Foot Mounted**
Model	**: 16 SML 320N 1/1**
Operational Speed	**: 1.2 M/Min.**
Idle Speed	**: 12 M/Min.**
No. of Fall	**: 1 No.**
Motor	**: 15Kw x 1500RPM, VVVF Drive**
Wire rope Size	**: 16 Dia., GI Steel Core, 6x36 Cons.**
Rope Length	**: 35 Mtr. + 3 Dead Turn**
Make	**: PEL**
Drawing No.	**: 26.3192.3**

2) AUXILIARY SCRAPER BOOM

Capacity	**: 2 x 1.5 Tons**
Type	**: Foot Mounted with LH + RH Groove**
Model	**: 12LRML 200N 2/2**
Operational Speed	**: 1.2 M/Min.**
Idle Speed	**: 12 M/Min.**
No. of Fall	**: 1 No. R.H. & 1 No. L.H.**
Motor	**: 15Kw x 1500RPM, VVVF Drive**
Wire rope Size	**: 12 Dia., GI Steel Core, 6x36 Cons.**
Rope Length	**: 29 Mtr. + 3 Dead Turn (Each Side)**
Make	**: PEL**
Drawing No.	**: 26.3191.3**

DO NOT SCALE — NO SHARP CORNER ANY WHERE — IF IN DOUBT ASK

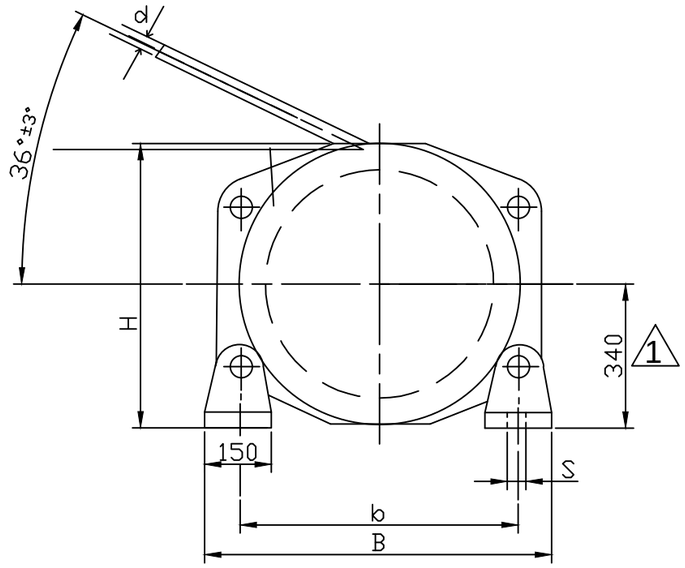

VIEW-X

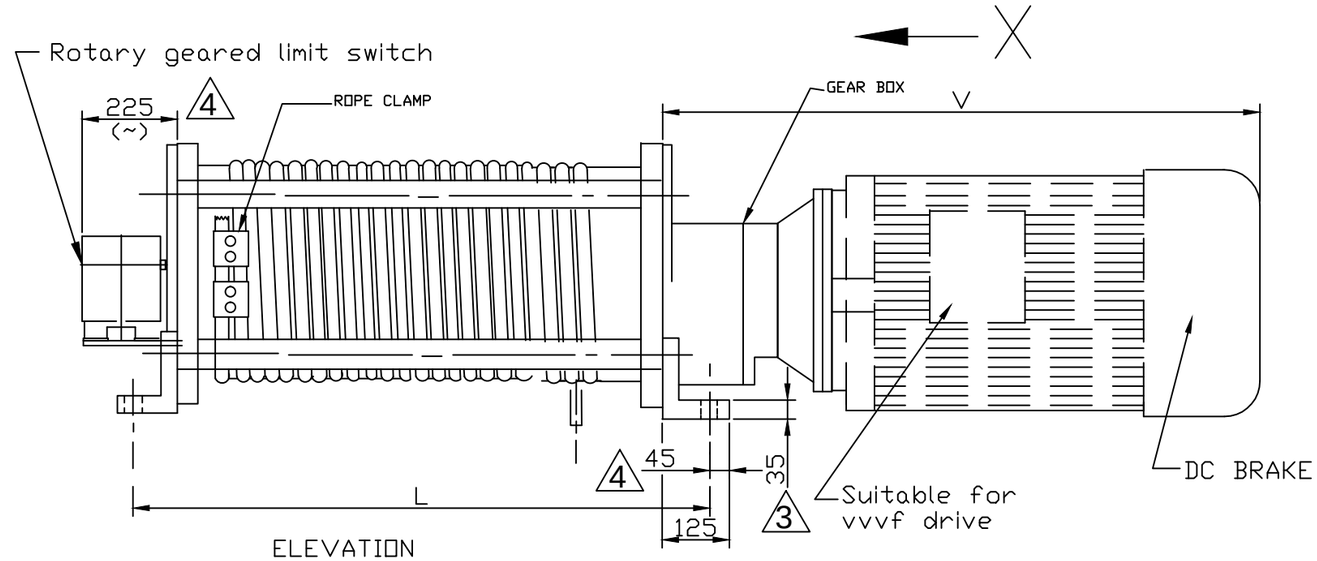

ELEVATION

3 HOIST MODEL:- 16SMR 320N 1/1
MC NO:- HM/545 & HM/575
QTY:- 2 NOS.

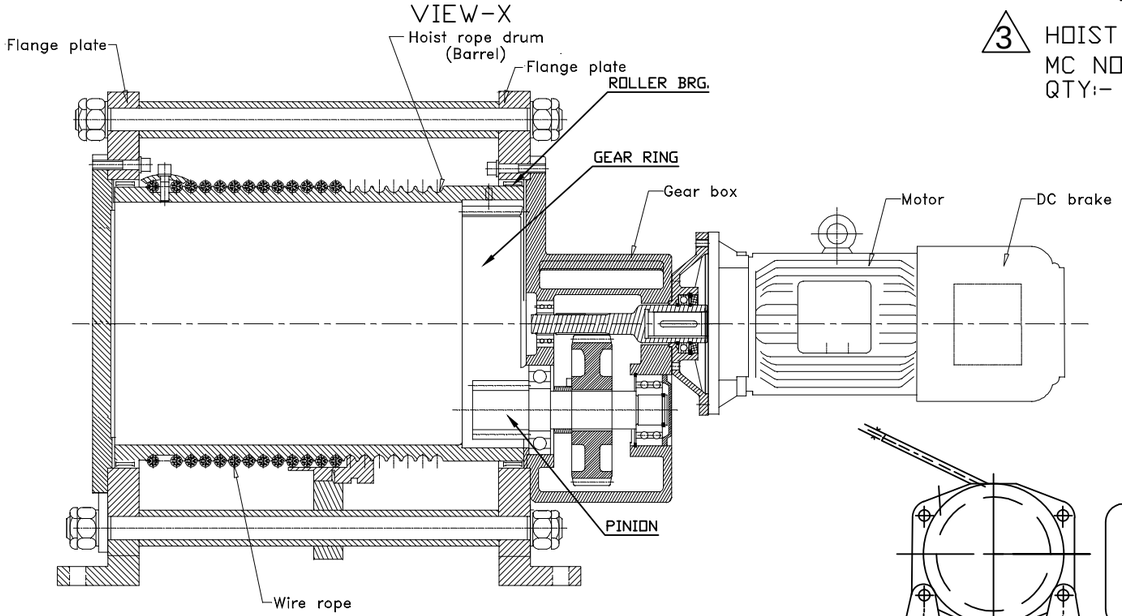

SECTIONAL VIEW 2

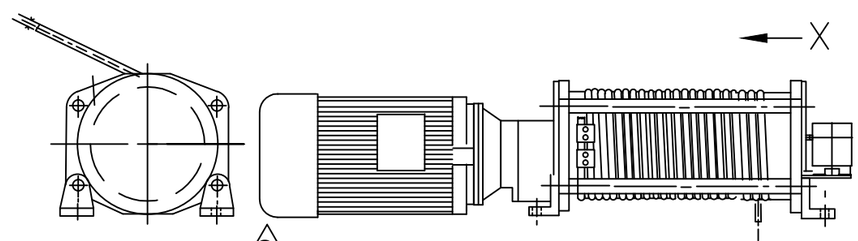

VIEW-X 3

ELEVATION

KEY PLAN FOR HOIST

3 HOIST MODEL:- 16SML 320N 1/1
MC NO:- HM/573 & HM/574
QTY:- 2 NOS.

TYPE	a	b	B	d	H	L 4	S	V (~)
16S 320N 1/1	-	580	730	16	630	1248	32	990

NOTE :-

(1) FOOT MOUNTED ELECTRIC HOIST WITHOUT WIRE ROPE,HOOK,
(2) Erection & Commissioning is not in PEL scope.
(3) Rotary geared limit switch shall be adjust as per requirement by client at site on erection time.

TECHNICAL SPECIFICATIONS	
MODEL OF HOIST	16S320N1/1
HOIST CAPACITY	3.5 TONNE
CLASS & DUTY OF HOIST	CLASS-2 AS PER IS:3938
LIFTING SPEED	IDLE : 12 M/Min.
	OPERATIONAL : 1.2 M/Min.
HOIST MOTOR DETAILS	KW : 15
	RPM : 1500(syn speed)
	MAKE : PBL
	3 PHASE, SQUIRREL CAGE INDUCTION MOTOR, 415V+/-10%, 50Hz+/-5%, IP/55, 4 POLE INSU H CLASS(TEMP. RISE LIMITED TO CLASS B), S4 DUTY, 40%CDF, WITH 150/240 START/HOUR WITH DC BRAKE Sult FOR 5to50 Hz Freq. Variation.
GEAR BOX DETAILS	TYPE&SIZE : 320N
	RATIO : 167.04
	MAKE : PEL
BRAKE DETAILS	TYPE&SIZE : Electromech Friction & 20 SIZE/BRAKE MOTOR
	MAKE : EMCO dynatorq/brakemotor
ROPE DRUM SIZE	DIA : 460mm
	LENGTH : 889mm
WIRE ROPE	16mm DIA, 6x36 GI STEEL CORE AS PER IS:2266
ROPE LENGTH TO BE WOUND	35MTR. + 3 DEAD TURN
NO. OF FALLS	1 NO.
LIMIT SWITCH	TYPE : ROTARY GEARED
	RATIO : 48:1
	MAKE : SPEED-O-CONTROLS PVT. LTD. Or Reputed make
CONTROL PANEL	IN PEL SCOPE (Suit. for VFD)
APPROX WEIGHT OF HOIST W/O WIRE ROPE	KGS. : 920
IN ELECON SCOPE	WIRE ROPE ONLY

RECOM NO:-HO/475/7/12
CLIENT;- ELECON
PROJ:-IFFCO Paradeep

THIS DRAWING IS THE PROPERTY OF PRAYAS ENGINEERING LTD. VALLABH VIDYANAGAR GUJARAT LOANED TO THE RECIPIENT WHO AGREES THAT IT SHALL NOT BE GIVEN OUT COPIED OR DUPLICATED FOR THE USE OF ANOTHER BUT USED ONLY BY THE RECIPIENT FOR THE PURPOSE OF MAINTAINING THE EQUIPMENT TO WHICH IT REFFERS.

Issue	Date	Amendments	Drawn	Apvd
4	14/9/12	drg revised as per requirement	VYJ	VBB
3	7/9/12	drg revised as per requirement	VYJ	VBB
2	30.8.12	view added	VYJ	VBB
1	20.8.12	Drawing revised as per comment	VYJ	VBB

Title:- FOOT MOUNTED HOIST FOR MAIN BOOM

Prayas Engineering Ltd.

Drawn By : V.Y.JOSHI 2/7/11
Chd By : V.B.BHATT 2/7/11
Apvd By :
M/c No. :
Order No. :
Scale NTS
Drg. No. : 26.3192.3
Sheet No. :
Issue : 4

All dimensions in mm — A2 SIZE

DO NOT SCALE — NO SHARP CORNER ANY WHERE — IF IN DOUBT ASK

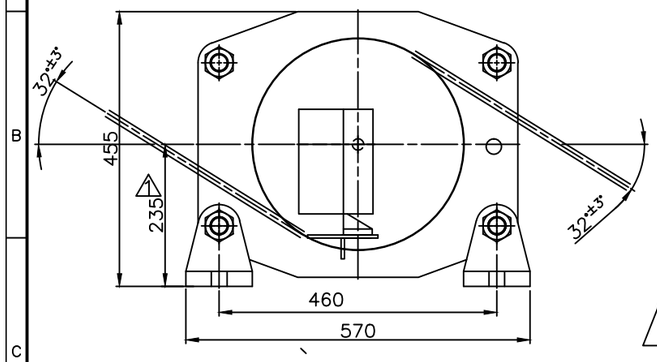

view-x

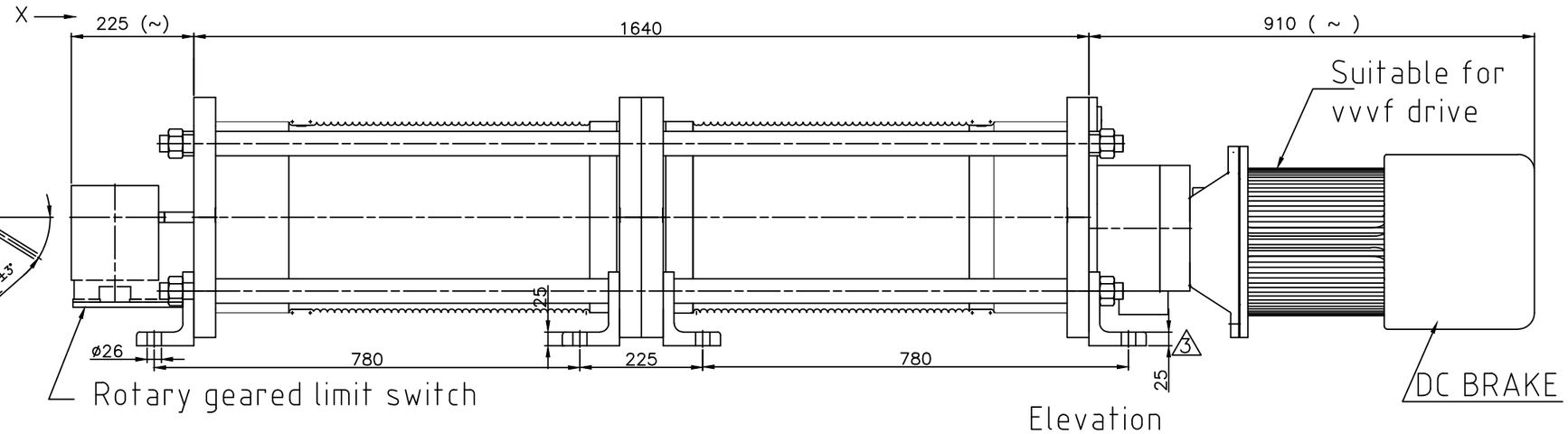

Elevation

3 HOIST MODEL:- 12LRMR 200N 2/2
M/C NO. : HM/545 & HM/575
QTY. : 2 NOS.

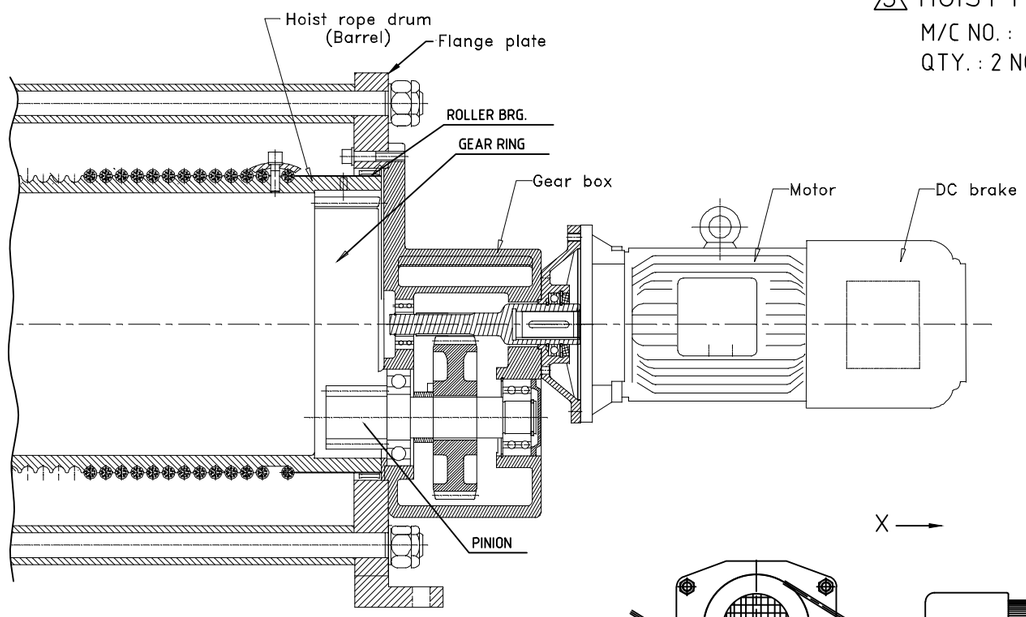

SECTIONAL VIEW 2

	TECHNICAL SPECIFICATIONS
MODEL OF HOIST	12LRMR 200N 2/2
HOIST CAPACITY	L.H. SIDE : 1.5 TONNE
	R.H. SIDE : 1.5 TONNE
CLASS & DUTY OF HOIST	CLASS-2 AS PER IS:3938
LIFTING SPEED	IDLE : 12 M/Min.
	OPERATIONAL : 1.2 M/Min.
HOIST MOTOR DETAILS	KW : 15
	RPM : 1500(syn speed)
	MAKE : PBL
	3 PHASE, SQUIRREL CAGE INDUCTION MOTOR, 415V+/-10%, 50Hz+/-5%, IP/55, 4 POLE INSU H CLASS(TEMP. RISE LIMITED TO CLASS B), S4 DUTY, 40%CDF, WITH 150/240 START/HOUR WITH DC BRAKE Sult FOR 5to50 Hz Freq. Variation.
GEAR BOX DETAILS	TYPE&SIZE : 200N
	RATIO : 123.7
	MAKE : PEL
BRAKE DETAILS	TYPE&SIZE : Electromech Friction & 20 SIZE/BRAKE MOTOR
	MAKE : EMCO dynatorq/brakemotor
ROPE DRUM SIZE	DIA : 350mm
	LENGTH : 1622mm
WIRE ROPE	12mm DIA, 6x36 GI STEEL CORE AS PER IS:2266
ROPE LENGTH TO BE WOUND	L.H. SIDE : 29MTR. + 3 DEAD TURN
	R.H. SIDE : 29MTR. + 3 DEAD TURN
NO. OF FALLS	L.H. SIDE : 1 NO.
	R.H. SIDE : 1 NO.
LIMIT SWITCH	TYPE : ROTARY GEARED
	RATIO : 48:1
	MAKE : SPEED-O-CONTROLS PVT. LTD. Or Reputed make
CONTROL PANEL	IN PEL SCOPE (Suit. for VFD)
APPROX WEIGHT OF HOIST W/O WIRE ROPE	KGS. : 905
IN ELECON SCOPE	WIRE ROPE ONLY

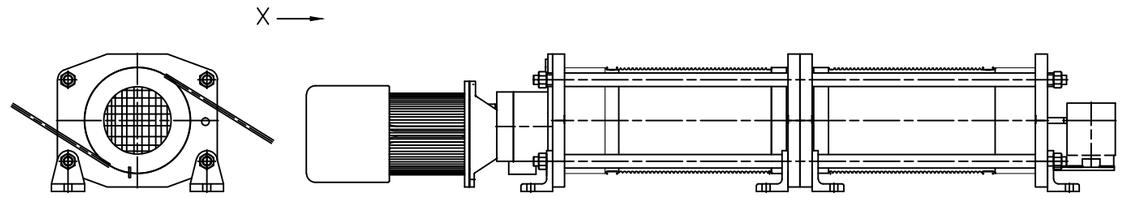

view-x

ELEVATION
KEY PLAN FOR HOIST

3 HOIST MODEL:- 12LRML 200N 2/2
M/C NO. : HM/573 & HM/574
QTY. : 2 NOS.

NOTE : -

(1) FOOT MOUNTED ELECTRIC HOIST WITHOUT WIRE ROPE,HOOK,
(2) Erection & Commissioning is not in PEL scope.
(3) Rotary geared limit switch shall be adjust as per requirement by client at site on erection time.
(4) At the time of erection rope must be equally wound on drum LH side & RH side.

RECOM NO:-HO/475/7/12
CLIENT;- ELECON
PROJ:-IIFCO Paradip Proejct

THIS DRAWING IS THE PROPERTY OF PRAYAS ENGINEERING LTD. VALLABH VIDYANAGAR GUJARAT LOANED TO THE RECIPIENT WHO AGREES THAT IT SHALL NOT BE GIVEN OUT COPIED OR DUPLICATED FOR THE USE OF ANOTHER BUT USED ONLY BY THE RECIPIENT FOR THE PURPOSE OF MAINTAINING THE EQUIPMENT TO WHICH IT REFFERS.

Issue	Date	Amendments	Drawn	Apvd.
3	30.8.12	Drg revised as per comment	VYJ	VBB
2	30.8.12	view added	VYJ	VBB
1	20.8.12	Drg revised as per comment	VYJ	VBB

Title:- FOOT MOUNTED HOIST WITH LH RH SIDE

Prayas Engineering Ltd.

Drawn By : V.Y.JOSHI 2/7/11
Chd By : V.B.BHATT 2/7/11
Apvd By :
M/c No. :
Scale NTS
Order No. :
Drg. No. : 26.3191.3
Sheet No. :
Issue : 3

All dimensions in mm — A2 SIZE

ELECON EPC PROJECTS LIMITED

INSTRUCTION MANUAL

FOR

ELECTRIC WIRE ROPE HOISTS

Elecon EPC Projects Limited

24,GIDC Estate – Manjusar - 391 77,Dist:Vadodara,Gujarat,India.

TEL.: +91 Phone : 02667-264362, Direct Dial:02692-678905, FAX : +91 2667 264362

INDEX

Sr. No.	Description	Page No.
1.	GEAR BOXES & ROPE DRUMS	1
2.	MAIN HOIST MOTORS (TAPERED ROTOR MOTOR)	3
3.	MAIN HOIST MOTOR (STANDARD SQUIRREL CAGE MOTOR)	5
4.	MICRO HOISTS	7
5.	BOTTOM BLOCKS	9
6.	ROPE ANCHOR AND SHEAVE EQUALIZING ARM	11
7.	LOW HEADROOM TROLLEYS KE	13
8.	FRONT TROLLEYS FOR SWIVELLING TROLLEY HOIST	15
9.	REAR TROLLEYS FOR SWIVELLING TROLLEY HOIST	17
10.	OPERATING INSTRUCTION	
	(A) General	19
	(B) Assembly and Commissioning	19
	(C) Operation	20
	(D) Maintenance and Repair	21
11.	MAINTENANCE TABLE	25

GEAR BOXES & ROPE DRUMS

E-100

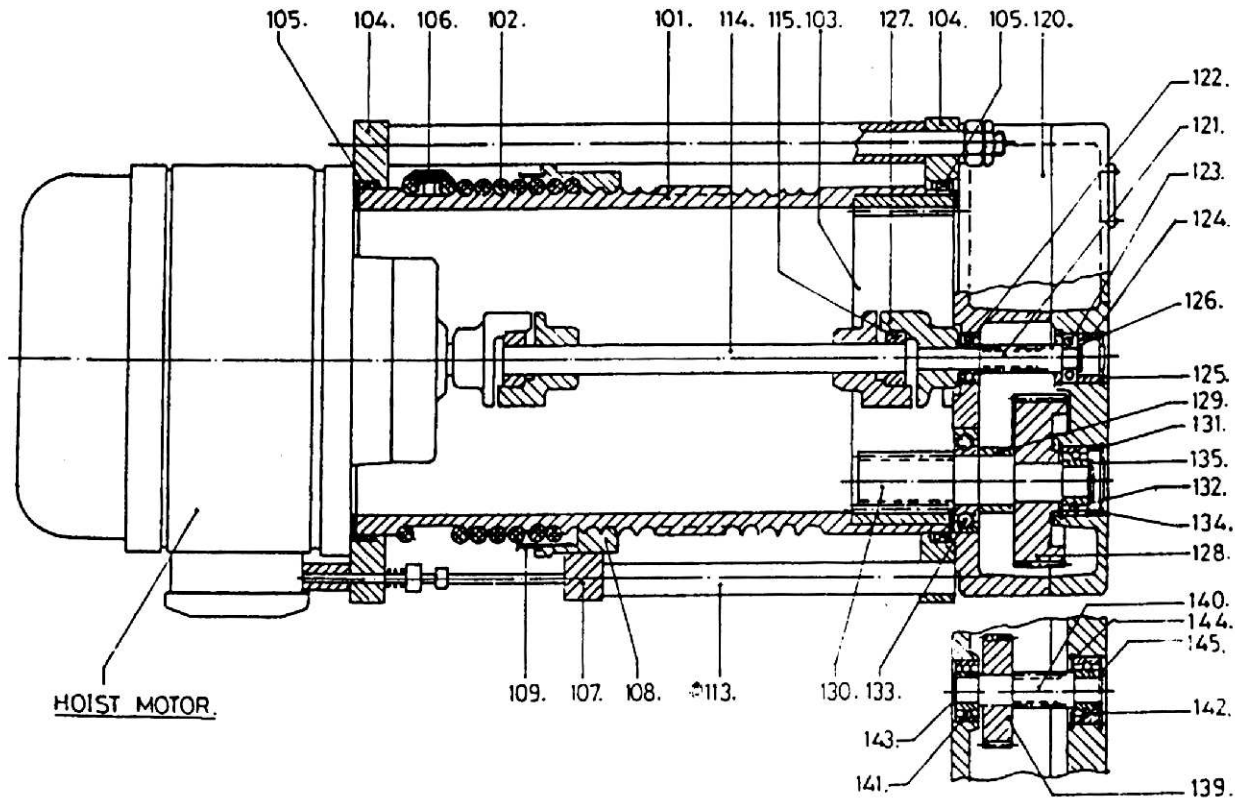

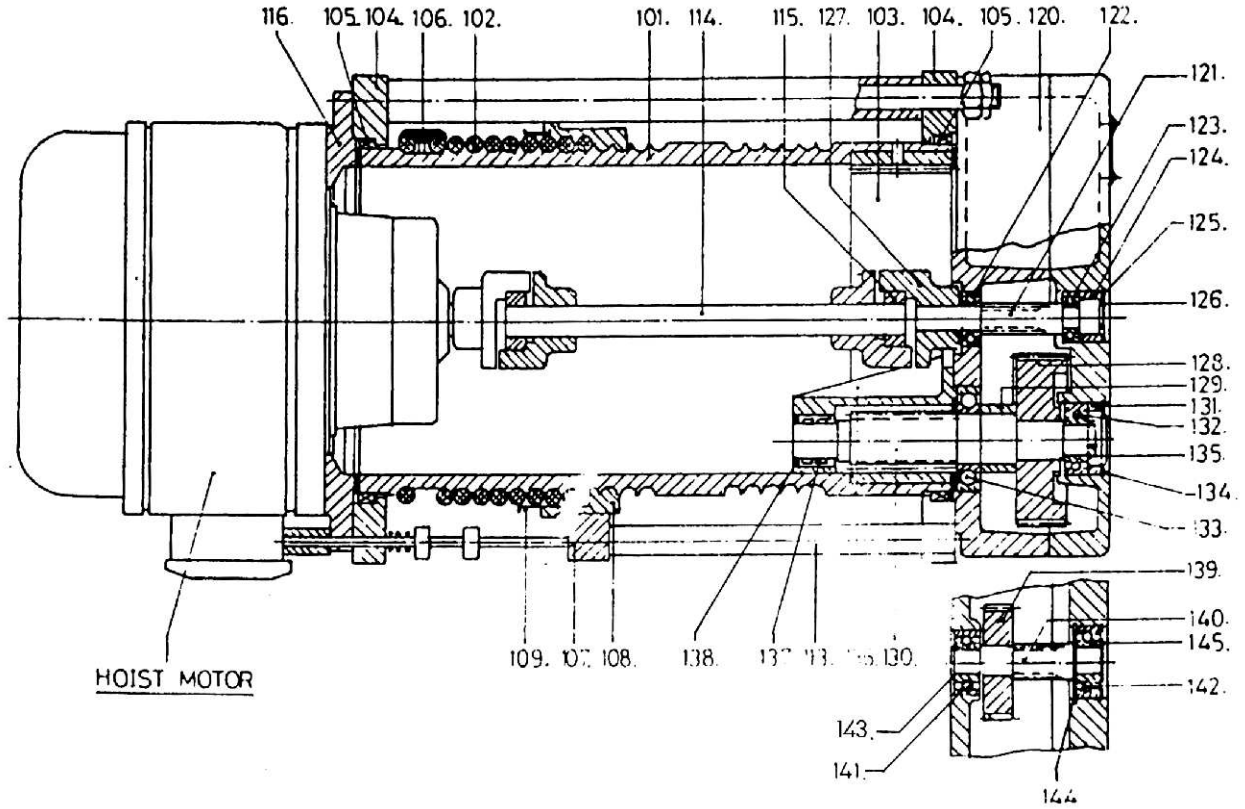

E-100 - Gear Box & Rope Drum

101	:	ROPE DRUM
102	:	ROPE
103	:	GEAR RING
104	:	FLANGE PLATE
105	:	ROLLER BEARING
106	:	ROPE CLAMP
107	:	ROPE GUIDE COMPLETE
108	:	ROPE GUIDE
109	:	ROPE GUIDE RING
113	:	LEAD BAR
114	:	INTERMEDIATE SHAFT
115	:	COUPLING INSERT
116	:	INTERMEDIATE FLANGE (160S, 200S, 250S, 320N)
120	:	GEAR BOX COMPLETE
121	:	PINION SHAFT
122	:	BEARING
123	:	BEARING
124	:	SPACER
125	:	CIRCLIP
126	:	CIRCLIP
127	:	COUPLING HALF
128	:	GEAR WHEEL
129	:	SPACER
130	:	PINION SHAFT
131	:	SPACER
132	:	BEARING
133	:	BEARING
134	:	CIRCLIP
135	:	CIRCLIP
136	:	STEP BEARING (100S / 125N / 160N / 200N / 160S / 200S / 250N / 320N)
137	:	BEARING ------ DO ------
138	:	CIRCLIP ------ DO ------
139	:	GEAR WHEEL (50S - 320N)
140	:	PINION SHAFT (50S - 320N)
141	:	BEARING (DO)
142	:	BEARING (DO)
143	:	CIRCLIP (DO)
144	:	CIRCLIP (DO)
145	:	CIRCLIP (DO)

MAIN HOIST MOTORS

TAPERED ROTOR MOTOR

E-200

TYPE : 02.104
08.104

3 KW
5.2 KW
6.3 KW
12.5 KW

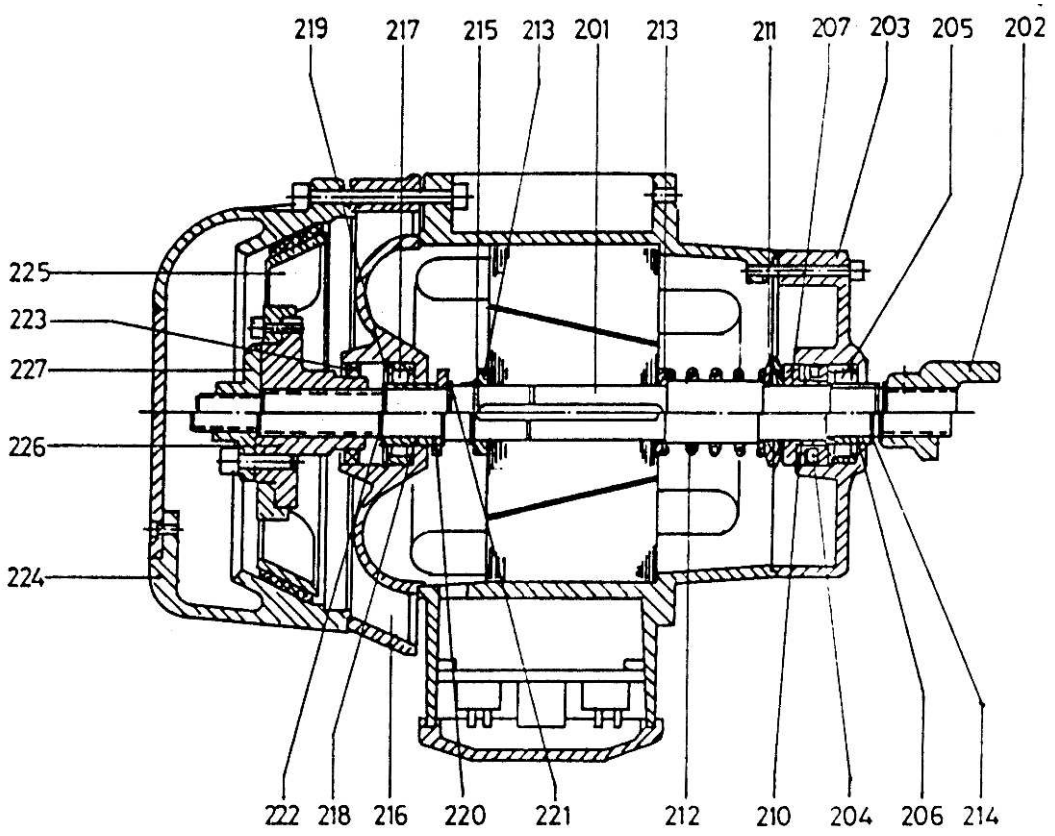

TYPE : 10.104
17.5 KW

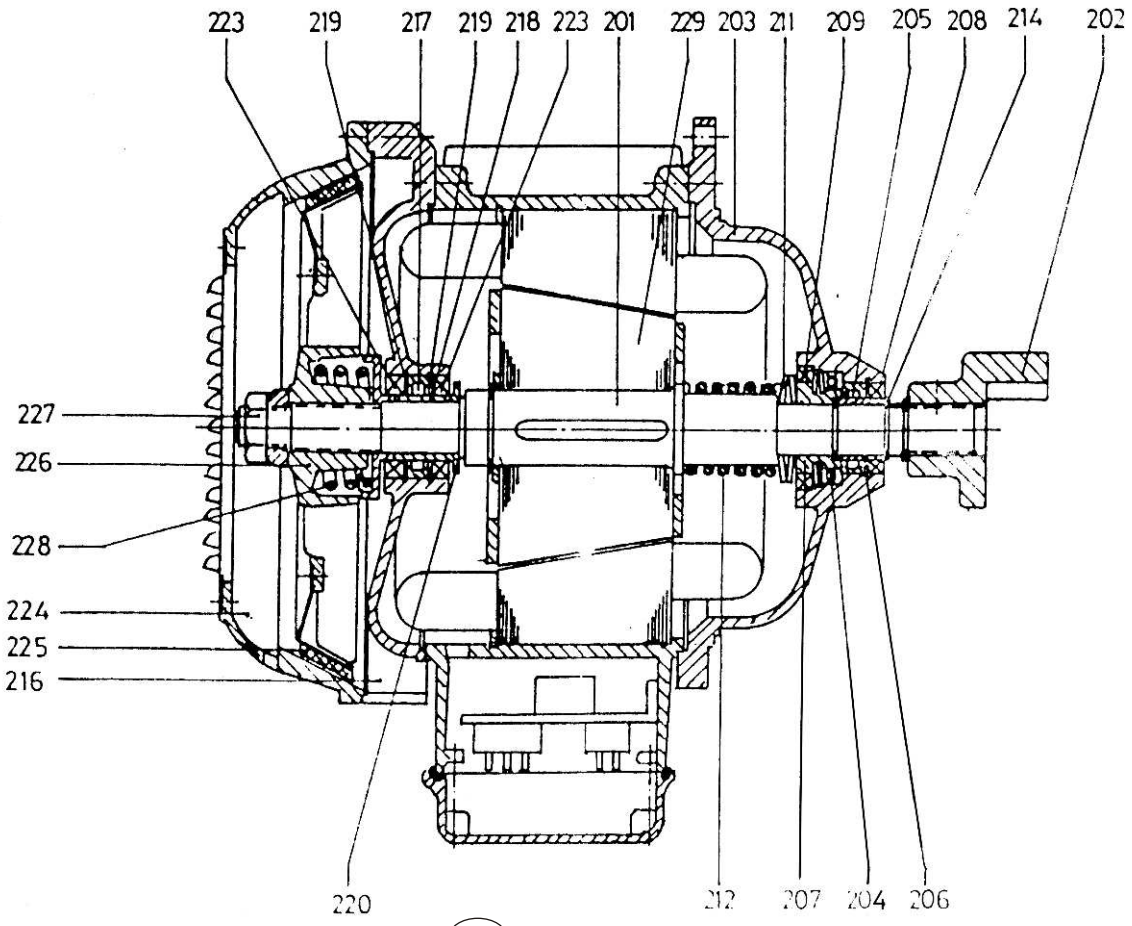

E-200 - Main Hoist Motor (Tapered Rotor Motor)

201 : MOTOR SHAFT
202 : COUPLING HALF
203 : END COVER
204 : THRUST BEARING
205 : BEARING
206 : BUSH
207 : COLLAR
208 : SHAFT SEAL
209 : SHAFT SEAL
210 : SHIM WASHER
211 : SPRING
212 : SPRING
213 : WASHER
214 : CIRCLIP
215 : CIRCLIP
216 : BRAKE END COVER
217 : BEARING
218 : BUSH
219 : CIRCLIP
220 : WASHER
221 : SPRING
222 : CIRCLIP
223 : SHAFT SEAL
224 : BRAKE COVER
225 : BRAKE DISC
226 : HUB
227 : ADJUSTING NUT
228 : SPRING
229 : STATOR - ROTOR

MAIN HOIST MOTOR

STANDARD SQUIRREL CAGE MOTOR

E-200/1

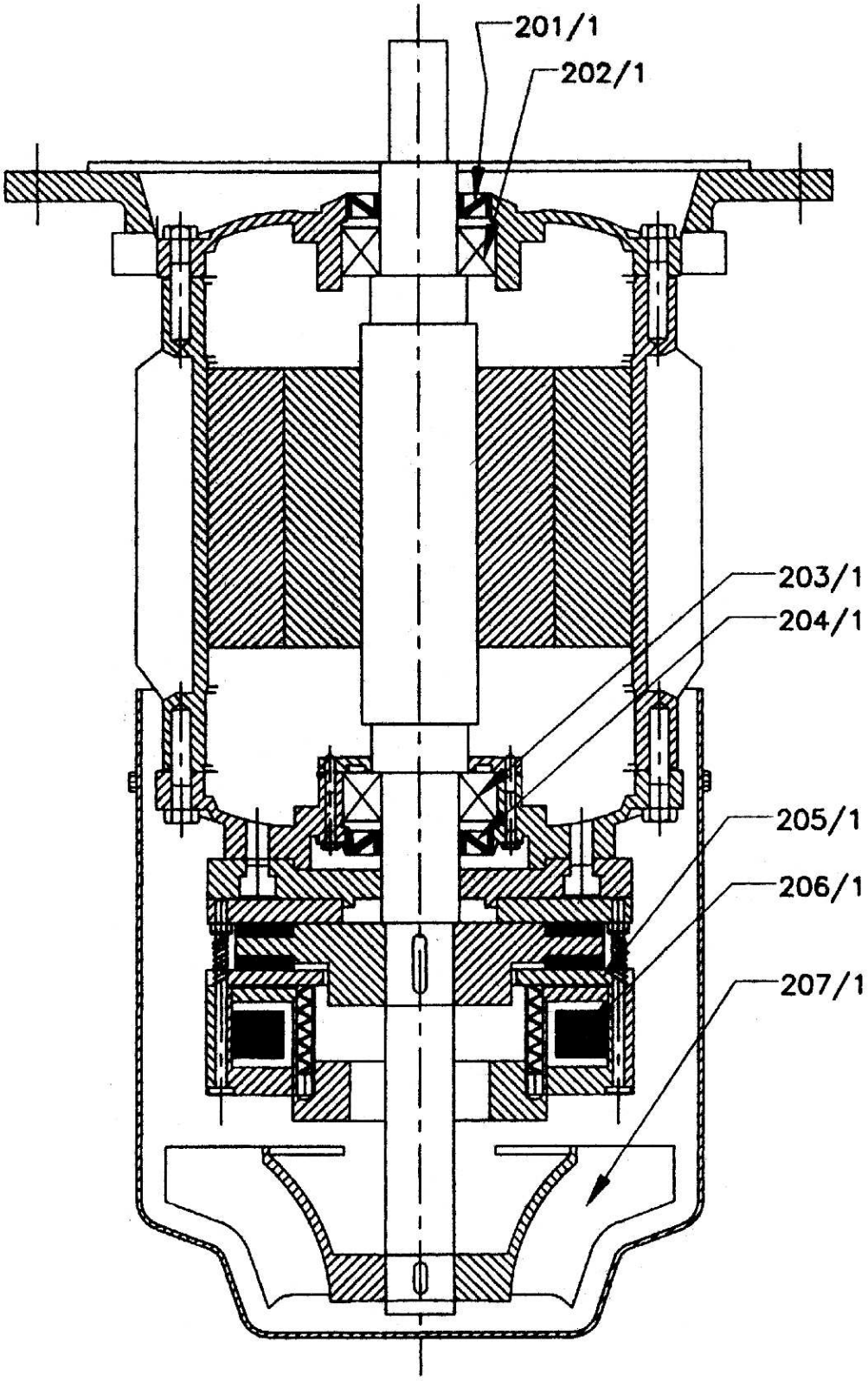

E-200/1 - Main Hoist Motor

STANDARD SQUIRREL CAGE MOTOR

201/1 : D.E. SIDE OIL SEAL

202/1 : D.E. SIDE BEARING

203/1 : N.D.E. SIDE BEARING

204/1 : N.D.E. SIDE OIL SEAL

205/1 : ARMATURE PLATE

206/1 : STATOR

207/1 : FAN

TYPE : 02.171
08.171

0.75 KW

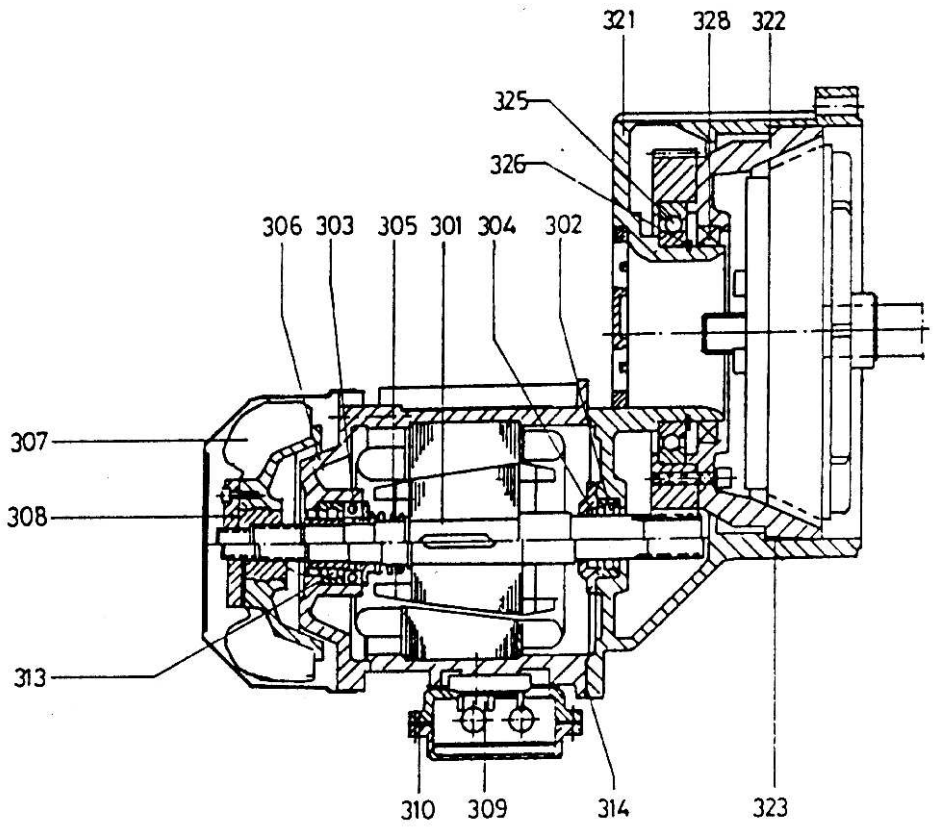

TYPE : 10.171

1.85 KW

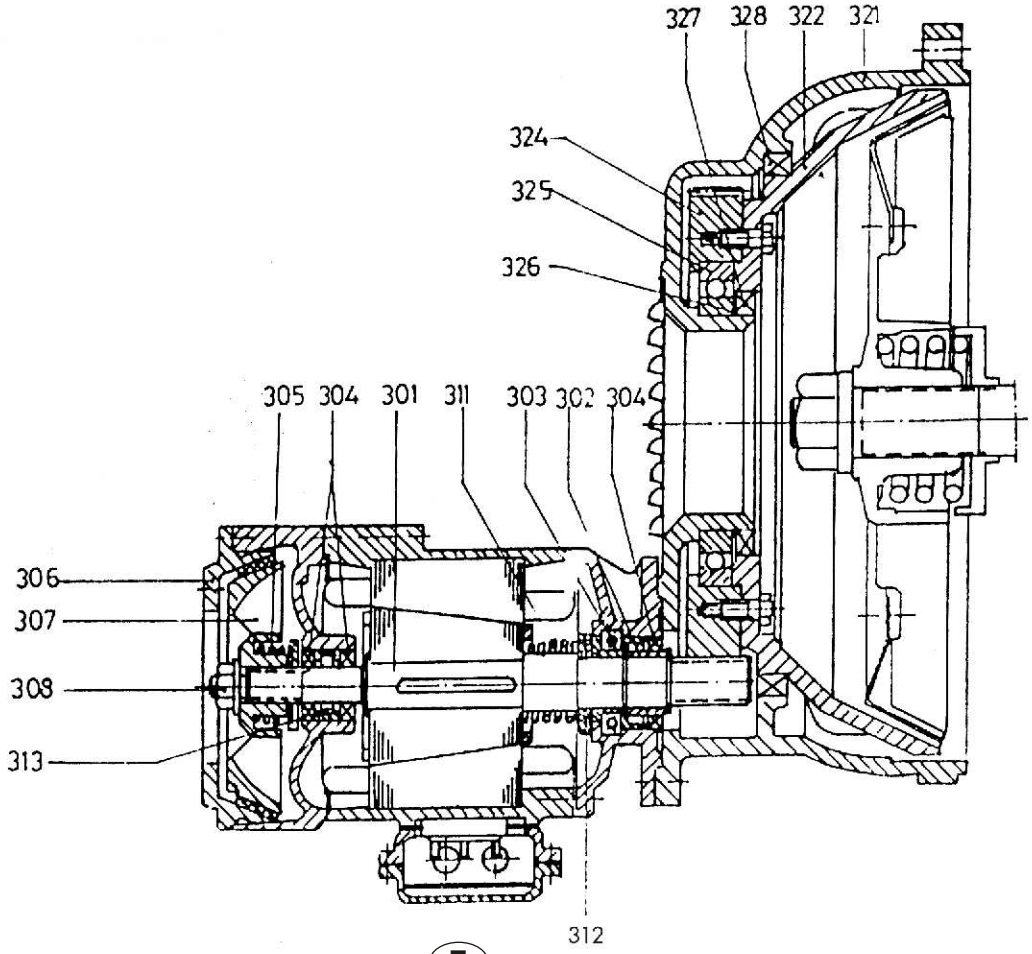

E-300 - Micro Hoist

301 : SHAFT WITH ROTOR
302 : BEARING
303 : THRUST BEARING
304 : SHAFT SEAL
305 : BRAKE SPRING
306 : END PLATES
307 : BRAKE DISC
308 : NUT
309 : TERMINAL BOX
&
310
311 : SPRING
312 : SPRING
313 : BEARING
314 : SEAL
321 : MICRO HOIST GEAR BOX
322 : MICRO BRAKE FLANGE
323 : BEARING RING
324 : MICRO HOIST GEAR RING
325 : BEARING
326 : CIRCLIP
327 : SHAFT SEAL
328 : SHAFT SEAL

BOTTOM BLOCKS

E-400

HOOK No.:- 0.8, 1.6, 2.5
TYPE :- 16N, 25N, 32N, 50N, 50S, 63N, 80N, 100N

2 - ROPE FALL

HOOK No.:- 5, 6, 8.
TYPE :- 100S, 125N, 160N, 160S, 200N, 200S, 250N, 320N.

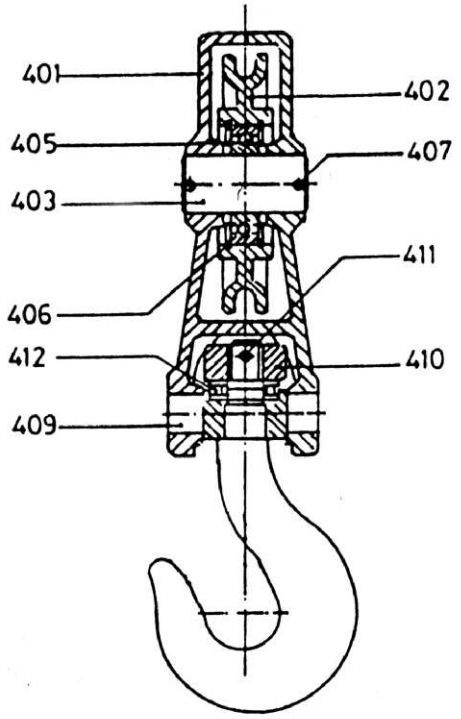

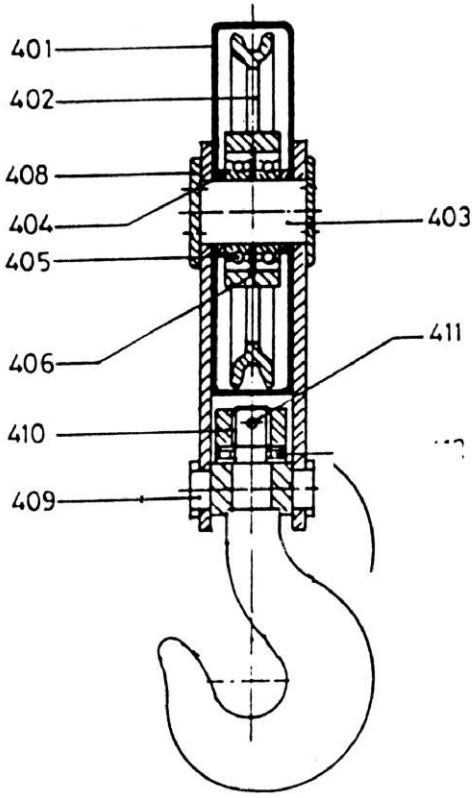

HOOK No.:- 1.6, 2.5
TYPE :- 16N, 25N, 32N, 50N.

4 - ROPE FALL

HOOK No.:- 5, 6, 8, 10, 12, 16.
TYPE :- 50S, 63N, 80N, 100N, 100S, 125N, 160N, 160S, 200N, 200S, 250N, 320N.

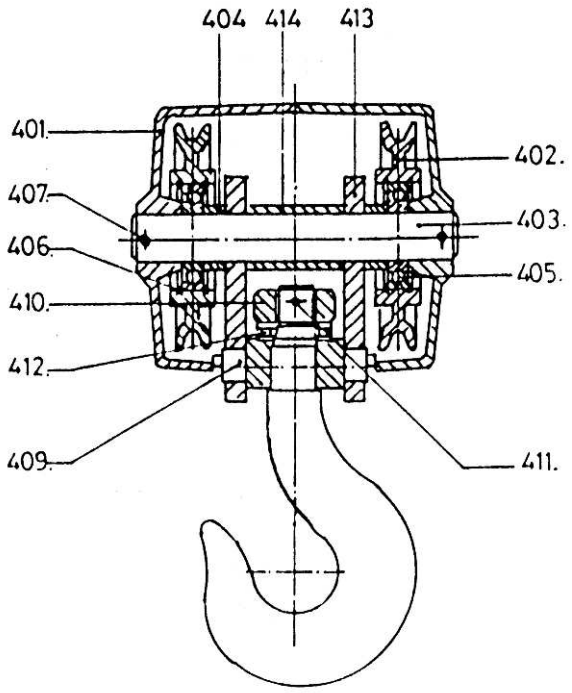

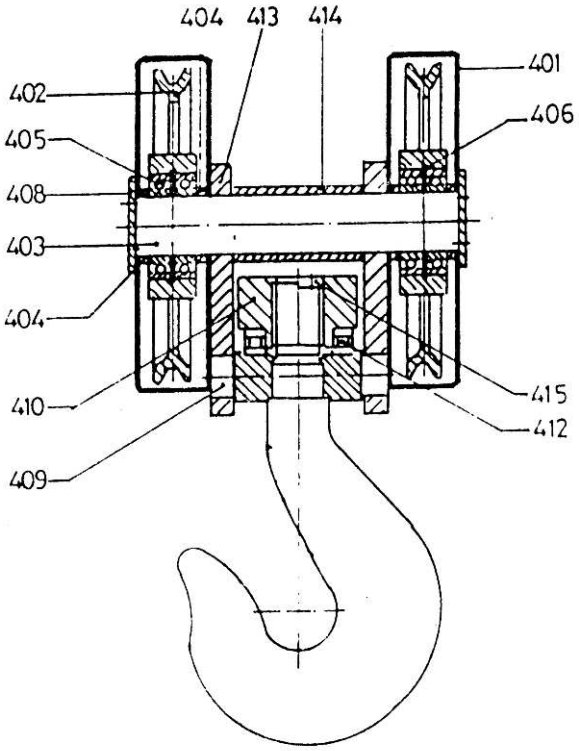

E-400 - Bottom Blocks

401 : HOUSING HALF
402 : ROPE SHEAVE
403 : AXLE
404 : SPACER
405 : DEEP GROOVE BALL BEARING
406 : CIRCLIP
407 : PIN
408 : DISC
409 : CROSS HEAD
410 : NUT
411 : PIN
412 : THRUST ROLLER BEARING
413 : HOOK SUSPENSION PLATES
414 : SPACER
415 : LOCKING PLATE

ROPE ANCHOR AND SHEAVE EQUALIZING ARM

E-500

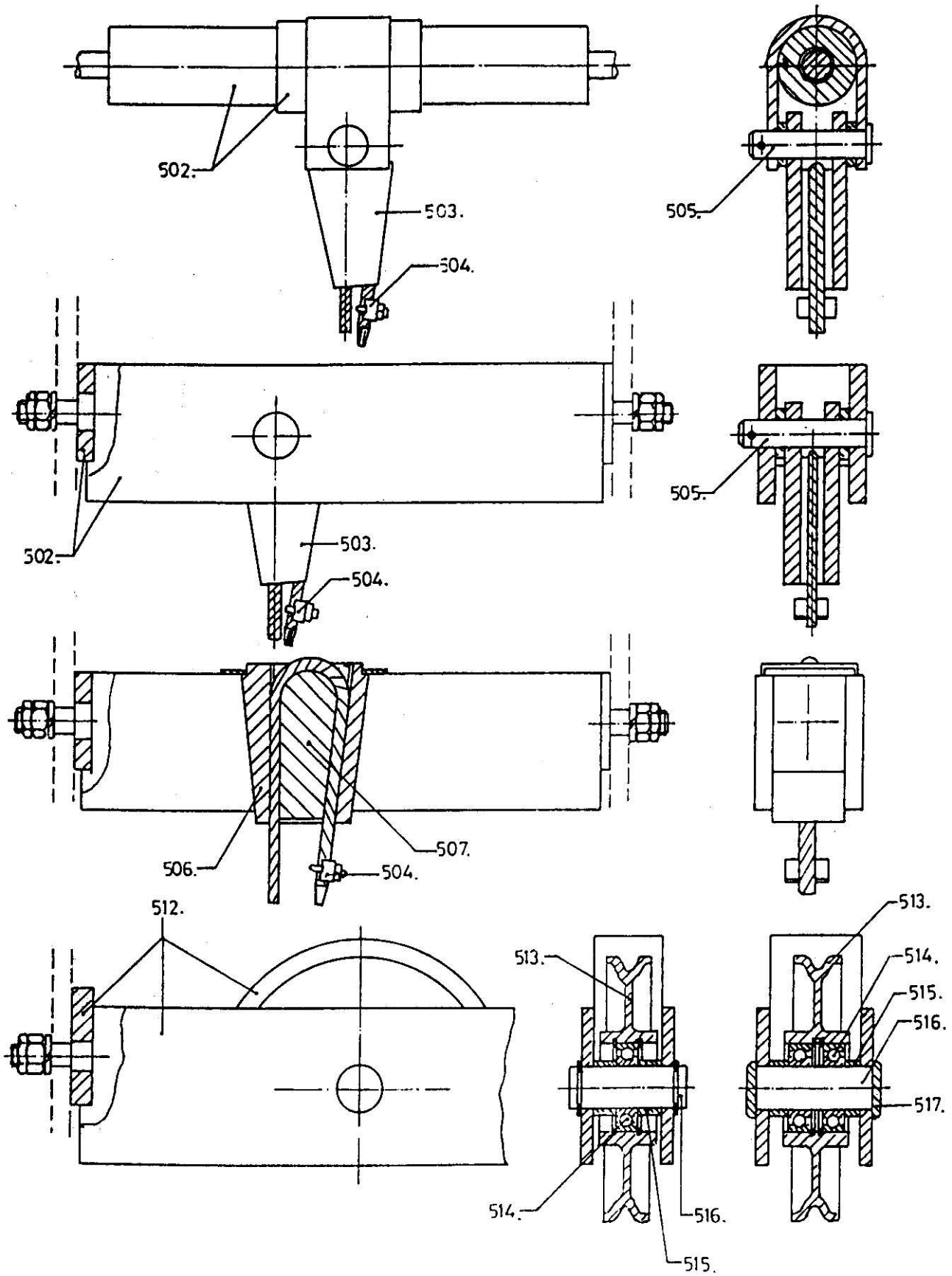

E - 500 - Rope Anchor And Sheave Equalizing Arm

502 : TRANSVERSE BAR
503 : ROPE ANCHOR COMPLETE
504 : ROPE CLAMP
505 : PIN
506 : WEDGE POCKET
507 : ROPE WEDGE

EQUALISING SHEAVE :

512 : TRANSVERSE BAR
513 : ROPE SHEAVE
514 : BEARING
515 : SPACER
516 : AXLE
517 : DISC

LOW HEADROOM TROLLEYS KE

E-600

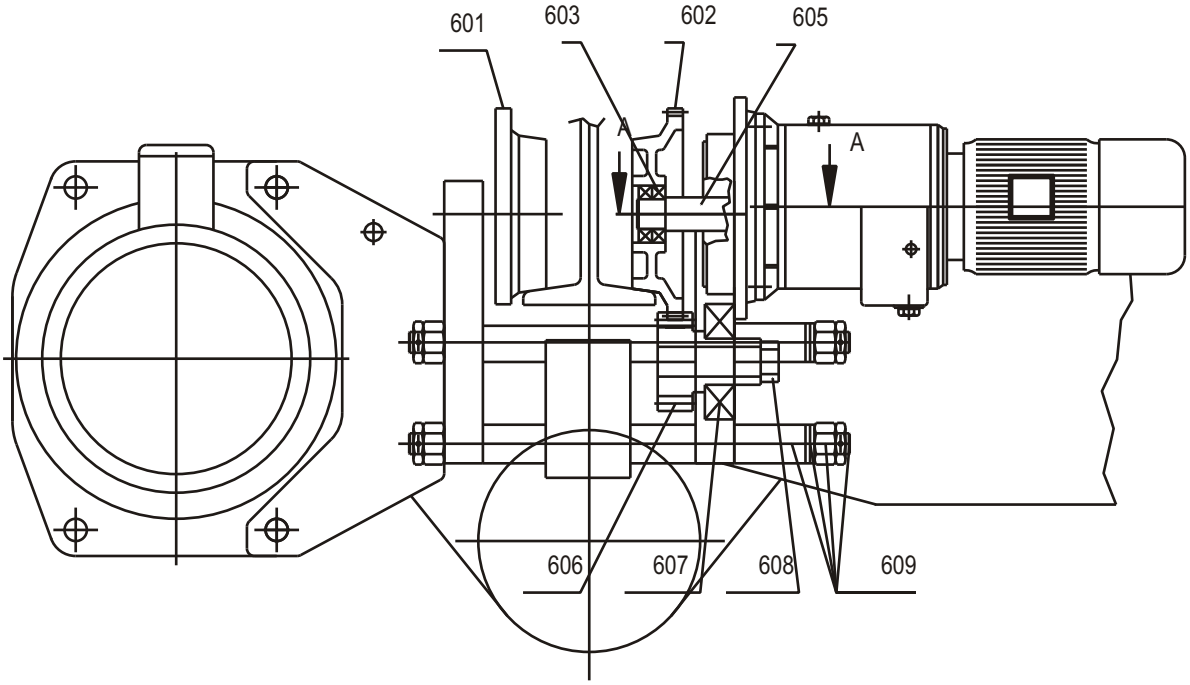

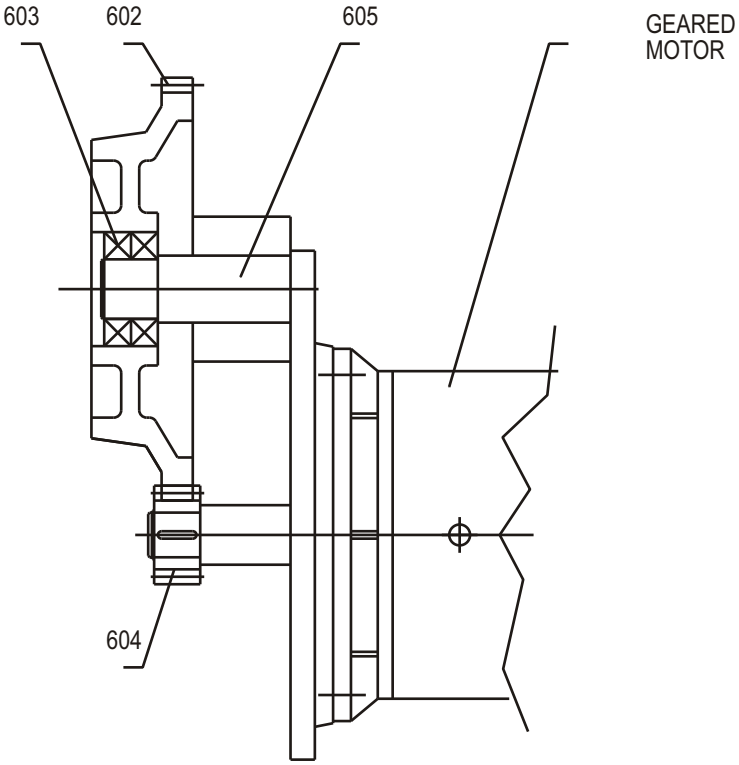

SECTION-A A

E - 600 - Low Headroom Trolleys

601 : TROLLEY WHEEL PLAIN
602 : TROLLEY WHEEL GEARED
603 : BEARING WITH SHIELD
604 : PINION ON CT DRIVE
605 : AXLE
606 : PINION
607 : BEARING
608 : HEXAGONAL SHAFT
609 : SUSPENSION BOLTS, COMPLETE.

FRONT TROLLEYS FOR SWIVELLING TROLLEY HOIST

E-700

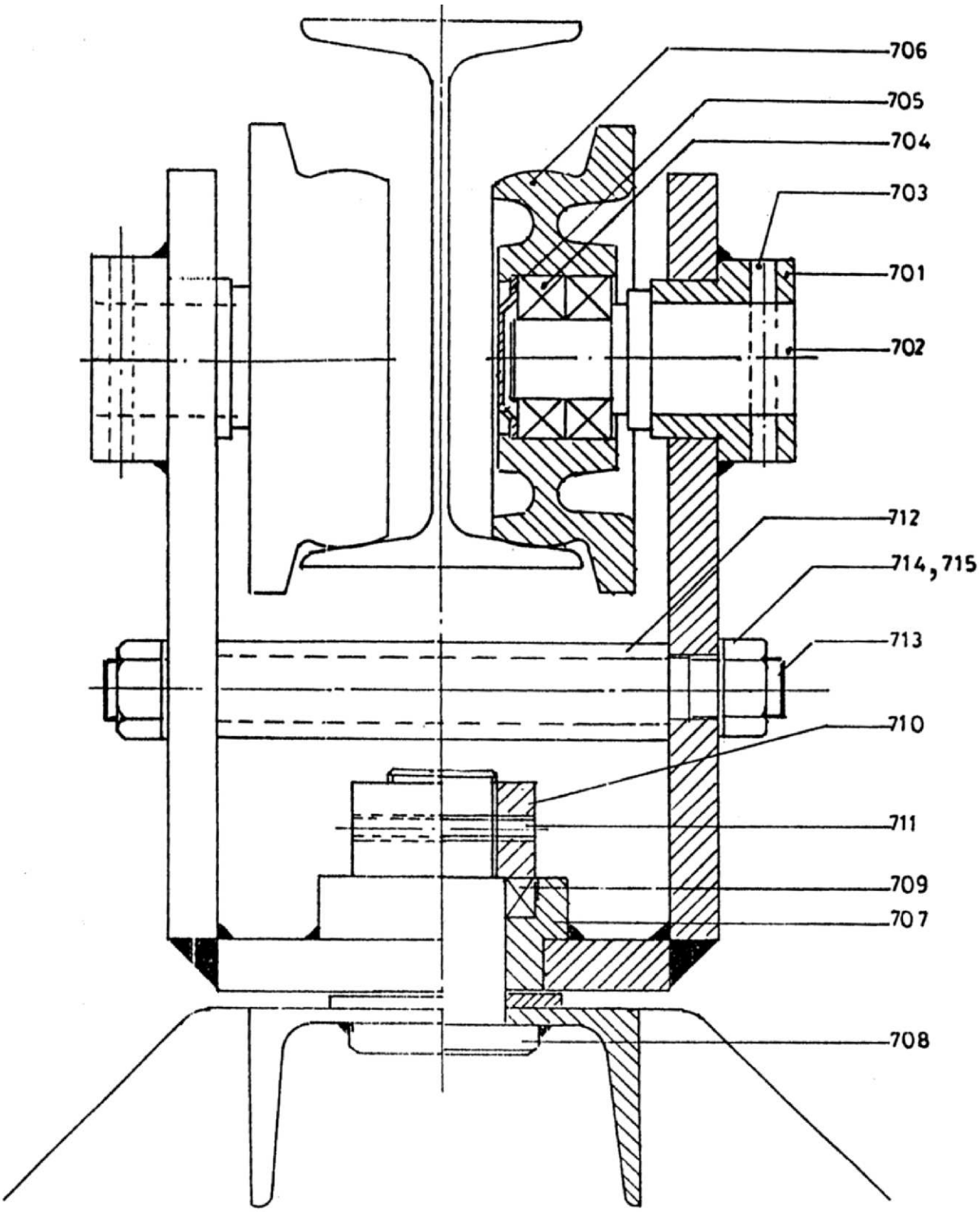

E - 700 - Front Trolleys For Swivelling Trolley Hoist

701 : HUB
702 : PIN
703 : SP. DOWEL SLEEVE
704 : DEEP GROOVE BALL BRG.
705 : END COVER
706 : TROLLEY WHEEL, PLAIN
707 : GUIDE BUSH
708 : THREAD PIN
709 : THRUST ROLLER BRG.
710 : HEX. NUT
711 : SP. DOWEL SLEEVE
712 : DISTANCE PIPE
713 : CONNECTING ROD
714 : SPRING WASHER
715 : HEX. NUT

REAR TROLLEYS FOR SWIVELLING TROLLEY HOIST

E-800

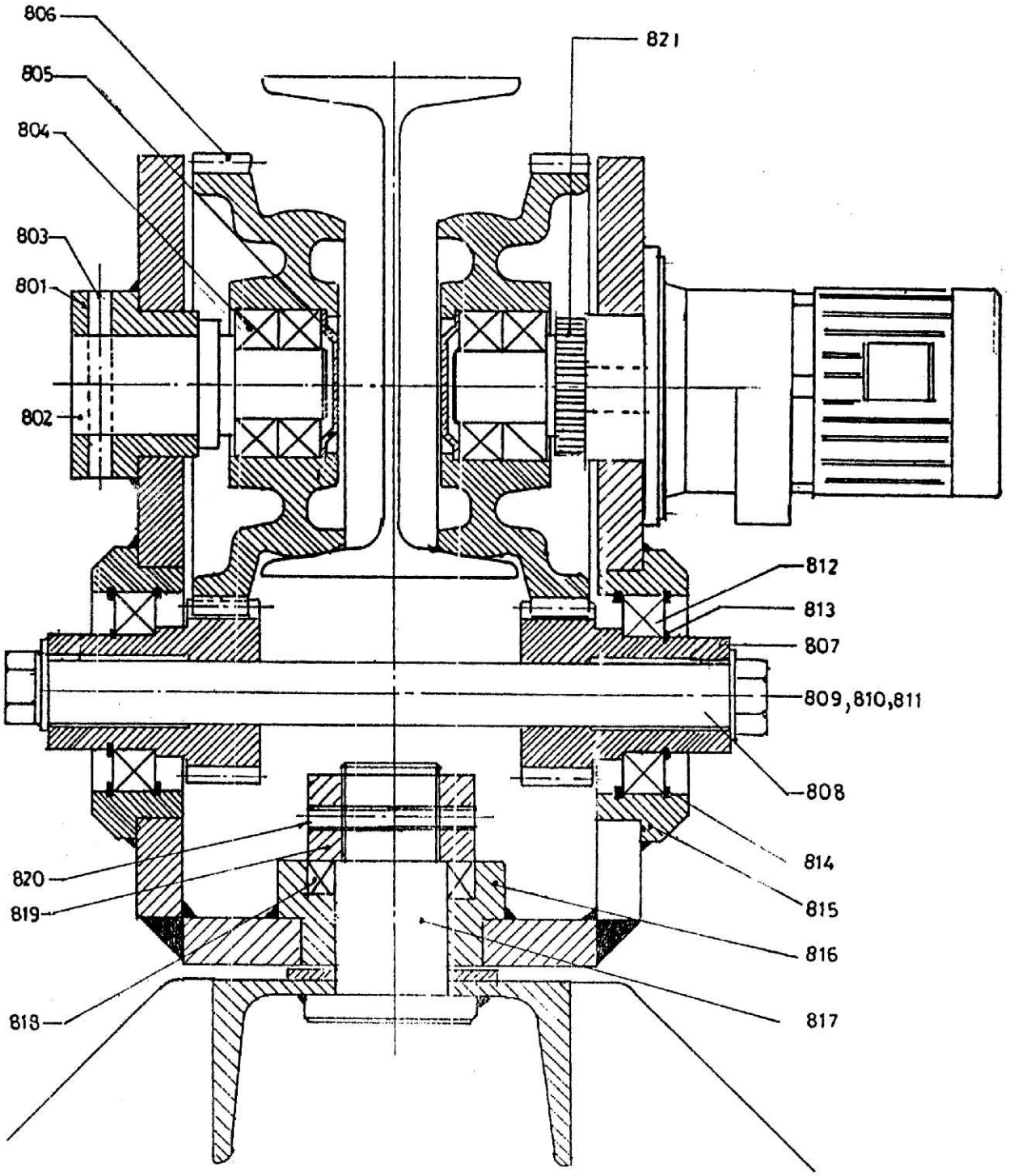

E - 800 - Rear Trolleys For Swivelling Trolley Hoist

801 : HUB
802 : PIN
803 : SP. DOWEL SLEEVE
804 : DEEP GROOVE BALL BRG.
805 : END COVER
806 : TROLLEY WHEEL, PLAIN
807 : PINION
808 : HEXAGON SHAFT
809 : PLAIN WASHER
810 : SPRING WASHER
811 : HEX. SCREW
812 : DEEP GROOVE BALL BRG.
813 : EXTERNAL CIRCLIP
814 : INTERNAL CIRCLIP
815 : BRG. HOUSING
816 : GUIDE BUSH
817 : THREAD PIN
818 : THRUST ROLLER BRG.
819 : HEX. NUT
820 : SP. DOWEL SLEEVE
821 : PINION

OPERATING INSTRUCTION

(A) GENERAL :

The entire range of our Electric Hoists has been designed in accordance with the latest rules for the manufacture of material handling equipment and to meet the continuously increasing demands of hoist efficiency.

The construction of these hoists are based on international standards and also on the “Rules for the Design of serial lifting equipment” issued by the Federation of European Hoist manufacturers - FEM.

PBL’s long experience in manufacturing power transmission drives and similar products under foreign collaboration and technical knowhow, is your guarantee for a high standards of quality and reliability of design. Modern manufacturing facilities and techniques allow efficient series manufacturing and interchangeability of parts.

(B) ASSEMBLY AND COMMISSIONING :

1. TheEleconEPC electric hoists should only be installed and commissioned by personnel who are qualified for carrying out this type of work. It will be necessary to comply with the safety regulations and the VDE guidelines.

2. The side clearance between the rim of flange and the rim of the runner should be 2-3 mm. on each side in the case of a monorail trolley.

   The side clearance between the track rail and the flange of the runner wheels must be 2-5 mm. on each side in the case of a double rail trolley.

   The tracks must be free of dirt, oil and paint, with secure buffers fitted and the end of the tracks.

3. In the case of a monorail trolley load the counterweight box until the electric hoist is perfectly balanced in the unloaded condition. Ensure that the filling cannot fall out.

4. Tighten all fixing bolts and fit the necessary locking devices.

5. Test the wire rope for any damage which may have occurred during transportation and thread it in the right sequence without any kinks through the lower block and fasten the dead end in the rope anchor (this will also apply to the upper pulley in the case of four fall reeved hoists.)

Drive the rope wedge in with a plastic hammer or a similar tool. Secure the free end of the rope (Approximately 10 cm. long) with the rope clamp (see label on hoist).

6. Check that the mains voltage corresponds to the rated motor voltage. The direction of motion of the load hooks and the traveling gear must correspond with the symbol on the push button station. If this is not the case reverse two of the phases at the mains supply terminals. Use the appropriate sized cable and fuses.

   Fuses for the electric hoists :

   VOLTAGE : 415 Volts / 50 C/S

   Only use delay action fuses.

7. Set the limit switch actuators for the highest and lowest positions of the hook by shifting the fixing rings. Test the limit switch actuator for ease of function.

   Test the function on no - load in both directions for main and micro hoisting check that system switches off correctly.

8. Test the function of all brakes several times on full load.

9. If the electric hoist had been stored for a long time before delivery or has been out of action for a long time. It will be necessary to carry out first service before commissioning.

(C) OPERATION :

1. The electric hoist may only be operated by persons over the age of 18. They must first be authorized by the works management and must be trained in the use of the lifting gear, the safety regulations and the operating instructions.

2. The electric hoists may only be used as laid down in the instructions. It is forbidden to exceed the rated load and duty class, pulling the load up at an angle, tearing off or sliding the load or moving vehicles with the electric hoist.

3. It will be necessary for the operator to test the function of the brakes and the emergency limit switches at the start of the operation.

   He should examine the condition of the electric hoist for any visual defects. If there are any defects which would impair safety, the equipment should be put in for repairs.

4. The emergency limit switches should be tripped during normal operation. The safe working load when hoisting molten matter should only be 2/3 of the permissible load, with a maximum of 16 T.

D. MAINTENANCE AND REPAIR :

1. The maintenance and repair work should only be carried out by trained personnel who are familiar with the operation instructions and the safety regulations. The work should be carried out on the unloaded and switched off lifting gear and it should not be possible for any un-authorised person to switch it on again.

   According to the safety regulations, cranes should be maintained and serviced from scaffoldinngs or work platforms, when it is not possible for this to be done from the ground.

2. Warning - Danger to life and limb :

   Lifting motors or drives, or brake discs of brake covers should only be dismantled if the bottom block is properly secured.

3. The maintenance table is based on operational conditions of duty classes 1 Bm & 1 Am.

   If the operating conditions are very stringent, e.g. Frequent operators at full load or multiple shift operations, then it will be necessary to carry out the preventive maintenance at correspondingly shorter intervals.

   Please see the maintenance table in a separate sheet.

4. Rope and rope guide :

   The rope should be replaced if any of the damage listed in the rope table should occur (see also DIN 15020, part 2). The operator should inspect the rope visually daily for any defects. Only wire ropes identical to the original ones should be used.

   Changing the rope :

   a). Dismantling the rope :
   Lower the hook to the lowest position (the bottom block must be completely supported). Remove the rope from the rope anchor and out of the bottom block (this will also apply to the upper sheave in case of four fall reeved hoists). Dismantle the rope guide (see rope guide) uncoil the remaining rope. Unscrew the fixing bolts of the rope clamps on the rope drum.

   Beware ! Tie the rope, as it might fall off.

b). Fitting the rope :

Unroll the rope and lay it flat. Make sure there are no kinks or twist in the rope. Protect the rope from dirt.

Attach the rope to the rope drum and tighten all the rope clamps with a torque spanner.

Then coil the rope onto the drum to approximately half way by pressing the "Lift" push button. Let the rope side through the hand, wearing leather gloves or using a rag, so that the dirt will be removed from the rope and the turns around the drum will be very taut. See "rope guide" for remaining instructions.

c.) Rope Guide :

There are five numbers on the outer surface of the high rim of the plastic rope guide, indicating the respective position of the rope pay - off. A standard saw is used to cut through at the number 5 for the low headroom monorail trolley and at the no. 3 for the double rail trolley. The cuts at the other numbers will be for other positions of rope pay - off. It will be possible to choose the pay - off at any angle over the entire 360 degree range by optionally fixing the feet at I or II. Spare rope guides are supplied not cut.

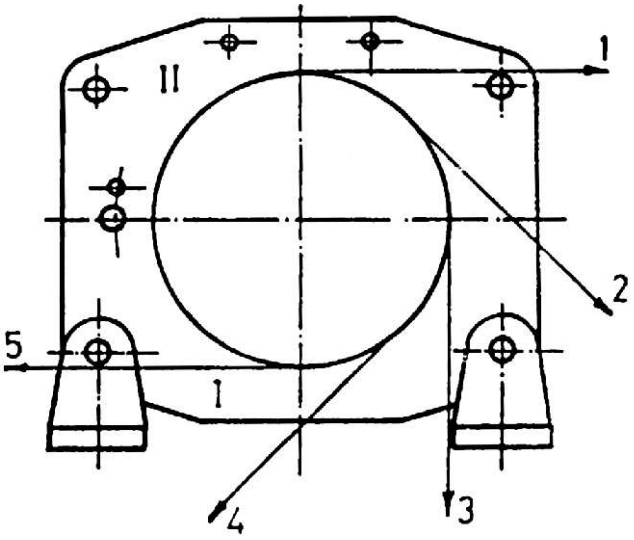

Rope diameter (mm)	Number of clamps	Tightening torque (Kg.m)
6.5	1	0.39
9	1	2.72
14	1	4.49
16	1	7.86
18	2	7.86
20	2	10.5
22	2	16.1

d). Changing the rope guide :

Release the limit switch adjusting collar for the lowest hook position (on the motor side) and slide towards the motor flange let the bottom block down to the floor.

Release the cable wedge and pull the cable through the bottom block (this should be done for the upper pulley as well in the case of four fall reeved hoists).

Coil the rope on to the rope drum up to approximately half way by operating the “lift” push button.

Un screw the fixing bolts and release the guide block from the rope guide. If the rope guide is made from the rope drum. Then pull the rope through the guide slit in the rope guide. If necessary change the rope guide ring by un screwing and removing the fixing screws with pressure springs.

If the rope guide is made from cast iron leave the rope on the drum, as the rope guide is made from two parts. The new component is fitted in the reverse order to the description above.

Warning : Reset the adjustment collars of the limit switches to avoid any accidents.

Check whether the cable is pulled through the bottom and upper pulley correctly.

5. Load hooks :

If the dimensions “Y” stated on the log sheet have increased by more than 10 %, or if there are surface cracks or any wear and tear on the jaws of the hook which exceed 5%, then it will be necessary to change the hook with the crossbar, bearings and nut.

6. Adjusting the brakes, Changing the brake disc - Main Hoist Motor (For tapered rotor motor)

It will be necessary for the brakes to be readjusted when the axial displacement of the brake disc is more than 4 mm or if the load is slipping. First unload the hoist and switch off the main switch. Unscrew the oval shape “PBL” locking plate, remove the three fixing bolts of the adjustment nut, shift the adjustment nut as far as possible by turning anti-clockwise untill the axial displacement of the brake is 1.5 mm (one turn is 2 mm). Replace the fixing bolts and tighten evenly. Then check

the brake under full load conditions. The brake disc of the main hoist motor acts as a friction clutch in electric hoists with micro hoist gear. Too large a slowing down path indicates that the micro hoist brake disc is

Type of motor	02 - 06	08	10
Torque	2.5 kpm	7 kpm	4.0 kpm
Screws	M8 x 32 DIN 609, 8.8	M 10 x 40 DIN 609, 10.9	M 10 x 25 DIN 609, 10.9

Warning : Ensure that the brake linings are always free of grease or oil. Basically the brake discs should be replaced as complete units. Do not fit any brake linings yourself.

7. Readjusting the micro hoist or drive motor brakes :

The brake discs of the micro hoist and drive motor can only be distinguished by the design of the brake lining (micro hoist = cone shape lining ; drive motor = flat lining). Remove the protective hood, switch on the motor and test the axial movements of the brake disc. The brakes must be readjusted if slipping occurs at full load or when the axial displacement exceeds approximately 3 mm.

Unscrew the fixing bolts, turn the adjustment nut clockwise (pitch 1.5 mm, righthanded thread) untill the axial displacement is 1 mm.

Connect the setting nut to the brake disc by means of the fixing bolts and replace the protective hood. Carry out a full load test.

Exchanging the brake disc of the MICRO HOIST OR DRIVE MOTOR :

Remove the protective hood, unscrew the fixing bolts, turn the adjustment nut anti clockwise and remove the brake disc.

Fit the new brake disc in the reverse order and observe the points listed in “Readjusting the brakes”.

The brake disc must be changed if the brake lining is worn down to 1-2 mm.

Warning ! Ensure that the brake lining is always free of grease or oil.

Do not fit any brake linings yourself.

It will only be possible to replace the complete brake disc unit when the linings are worn out.

In case of Standard squirrel cage induction motor, adjust the spring load to adjust the brake.

MAINTENANCE - TABLE

AT COMMISSIONING	DAILY INSPECTION	1 ST MAINTENANCE AFTER THREE MONTHS	EVERY THREE MOTHS	ANNUAL INSPECTION	AFTER FIVE YEARS	
X	X					TEST THE FUNCTION OF THE BRAKES AND EMERGENCY LIMIT SWITCHES. [UVV VBG 9 30 (1)]
X	X					CHECK THE ROPE AND ROPE FIXING.
		X	X			CHECK THE AXIAL DISPLACEMENT OF THE BRAKE AND IF NECESSARY ADJUST.
		X	X			CLEAN AND GREASE THE ROPE, ROPEDRUM, ROPE GUIDE AND LIMIT SWITCH BARS.
		X	X			LUBRICATE THE ROLLER BEARING SEATS (GREASE NIPPLE ON THE HOUSING FLANGES)
X		X		X		TEST THE DRIVE, BOLTED JOINTS, WELD SEAMS AND BUFFERS.
				X		CHECK THE ELECTRICAL EQUIPMENT AND THE TRACKS.
				X		CHECK THE LOAD HOOKS FOR CRACKS AND DEFORMATION.
				X		LUBRICATE THE GEAR RIMS OF THE DRUM AND THE RUNNERS.
					X	CHANGE OIL IN ALL DRIVES AND BEARINGS.

E-900 MOTOR MOUNT TYPE GEAR BOX & ROPE DRUM.

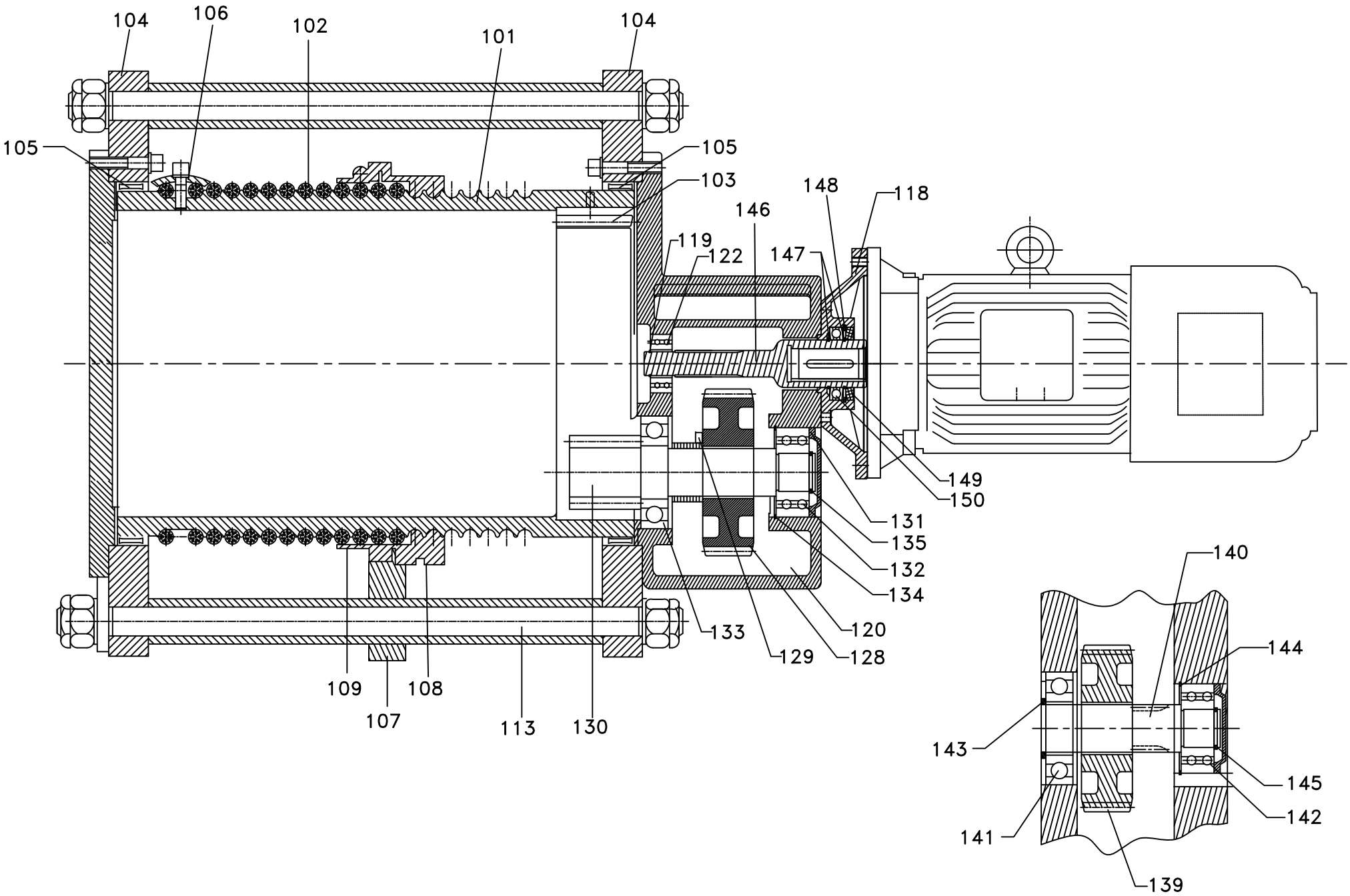

E-900 - MOTOR MOUN TYPE GEAR BOX & ROPE DRUM	
101	ROPE DRUM
102	ROPE
103	GEAR RING
104	FLANGE PLATE
105	ROLLER BEARING
106	ROPE CLAMPE
107	ROPE GUIDE COMPLET
108	ROPE GUIDE
109	ROPE GUIDE RING
113	LEAD BAR
118	MOTOR MOUNTING FLANGE
119	EXTERNALCIRCLIP
120	GEAR BOX COMPLET
122	BEARING
128	GEAR WHEEL
129	SPACER
130	PINION SHAFT
131	SPACER
132	BEARING
133	BEARING
134	INTERNAL CIRCLIP
135	EXTERNALCIRCLIP
139	GEAR WHEEL
140	PINION SHAFT
141	BEARING
142	BEARING
143	EXTERNALCIRCLIP
144	INTERNAL CIRCLIP
145	EXTERNALCIRCLIP
146	HOLLOW INPUT SHAFT
147	EXTERNALCIRCLIP
148	INTERNAL CIRCLIP
149	OIL SEAL
150	BEARING

E - 1000 - PART FOR DOUBLE RAIL CREBS

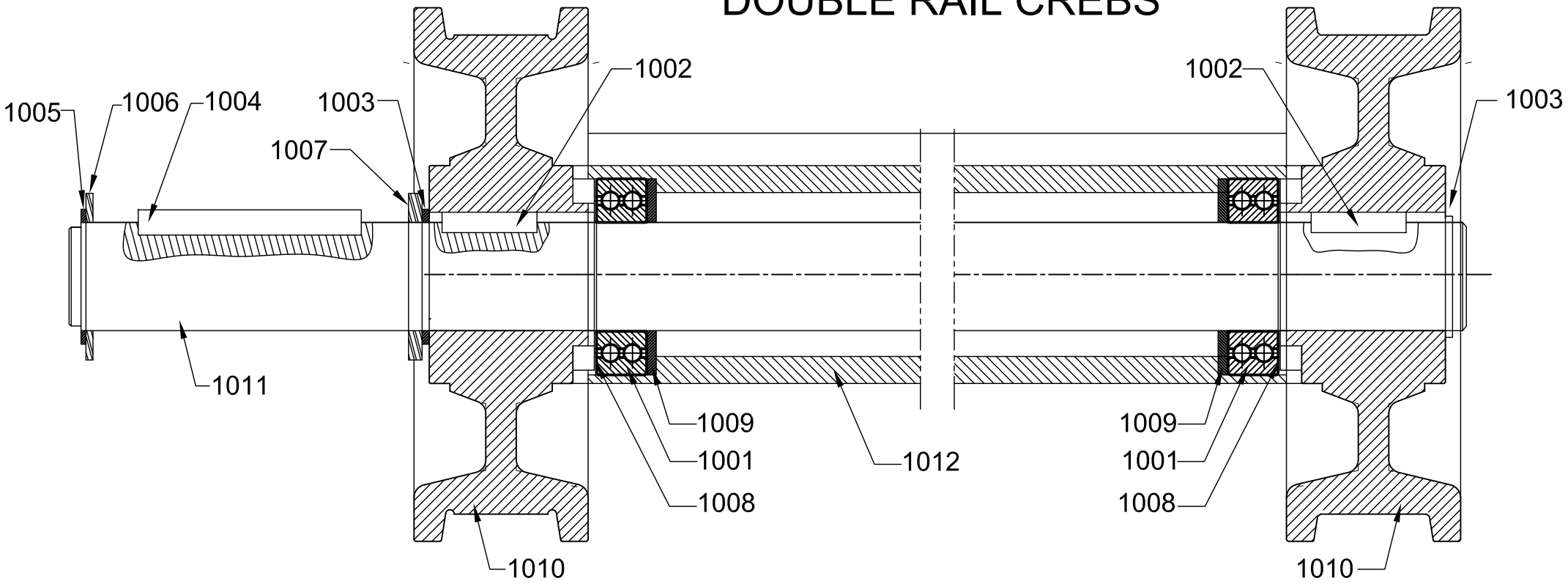

1001:- BEARING
1002:- FITTING KEY SHAPE 'A'
1003:-CIRCLIP
1004:- FITTING KEY SHAPE 'A'

1005:- CIRCLIP
1006:- SUPPORTING RING
1007:- SUPPORTING RING
1008:- RETAINING RING'

1009:- RETAINING RING
1010:- WHEEL
1011:- SHAFT
1012:- DIST-PIPE

GENERAL ARRANGEMENT OF TWIN TYPE HOIST

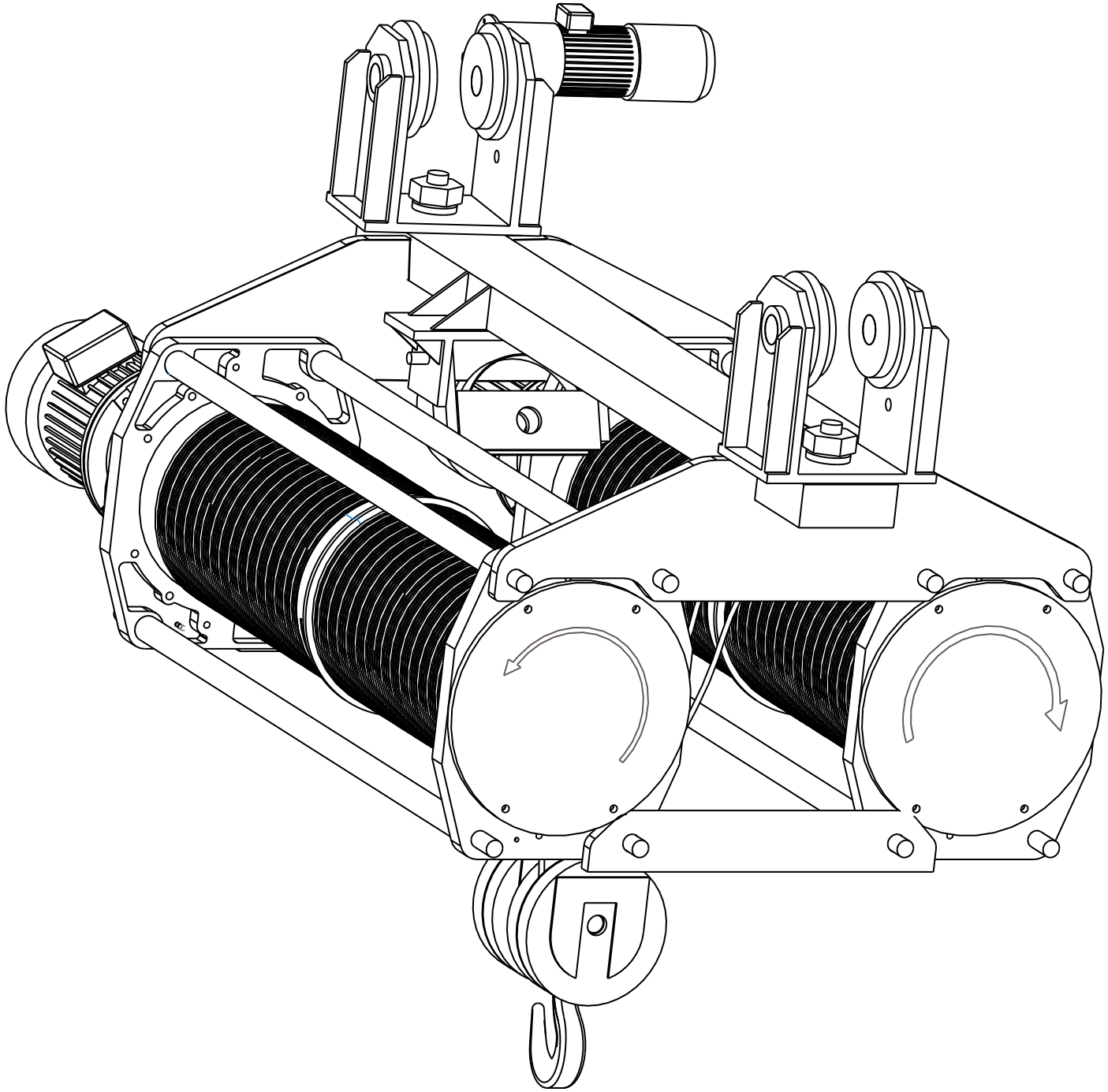

DIRECTION OF ROTATION OF ROPE DRUM
AS PER ARROW FOR WINDING OF WIRE ROPE

Write up for Errection of Twin Hoist

Twin hoists are combined unit of two hoists operating at a time. Out of two hoists, one hoist has right hand grove and other hoist has left hand groove.

Both motor will rotate or stop with single push buttons and same contactor. When we press hoisting push button, both drum should rotate in such a way that, rope will wound on both drum simultaneously (refer attached general arrangement of twin hoist. Both rope drum should rotate as per arrow mark) If both drum do not wound rope simultaneously, than change the direction of rotation of motor which do not wind the rope by changing supply of two terminals on motor terminal block.

Check the functioning of upper and lower limit switch of hoist before putting hoist in operation to avoid any accident. Please note that limit switch is provided on only one hoist and when limit switch operates, both motor will stop.

K.S.Vahora.

ELECON EPC PROJECTS LIMITED

CABLE REELING DRUM

INSTALLATION, OPERATION, MAINTENANCE & SPARE PARTS MANUAL FOR POWER & CONTROL CABLE REELING DRUM FOR FULL PORTEL SCRAPER RECLAIMER

ORDER NO. : CO/2223-2281

MACHINE NO : HM/545-573-574-575.

PROJECT : M/S INDIAN FARMERS FERTILISER COOPERATIVE LIMITED. (PARADEEP UNIT)
VIII - MUSADIA, PARADEEP
DIST. - JAGATSINGHPUR, ORISSA
PIN CODE : 754 142 (INDIA)

MANUFACTURER : ELECON ENGG.CO.LTD,
V.V.NAGAR - 388 120
GUJARAT (INDIA)

INDEX

SECTION	DESCRIPTION	PAGE NO.
1.	INTRODUCTION & OPERATIONAL WRITE UP	3
2.	MAIN COMPONENTS	7
3.	TECHNICAL SPECIFICATIONS	9
4.	CABLE FITTING INSTRUCTIONS	11
5.	SLIPRING MOUNTING INSTRUCTIONS	11
6.	INSTALLATION INSTRUCTIONS	12
7.	MAINTENANCE INSTRUCTION	13
8.	COMMISSIONING INSTRUCTIONS	49
9.	FAULT FINDINGS	52
10.	SPARE PARTS MANUAL	53

SECTION-1

1) INTRODUCTION

The cable reeling drum is specialised application for power transmission because of severe limitation of tensions in cable.

The cable reeling drum is used to transfer Electric power through cable from junction box located at center or end of runway to moving machines.

The cable reeling drum serves winding and unwinding of the cable automatically and parallel to drum shaft under all conditions of machine operation.
The winding and un-winding operation of cable is guided through Roller guide way.

In Mono-spiral CRD, the cable is recovered in single vertical layer between periphery halves of drum body, having sufficient rigidity to guide the cable.

The Drive unit of CRD consists of Geared motor with brake and slipping unit used for Torque regulating called Contorq unit mounted on worm shaft of Worm Gear Box. The Contorq unit is used to provide accurate controlled torque for reeling cables. The cable reeling drum must be energised prior to long travel motion of m/c.

Necessary safety limit switches are provided on roller guide way for better safety of cable.

Adjustment of torque of contorq unit is by castellated not accessed by removing flanged mounted Geared motor.

Rotate the nut in clock-wise direction to increase torque and in Anti-clockwise direction to decrease the torque.

2) OPERATIONAL WRITE UP OF CABLE REELING DRUM

I- Commissioning Instruction of Cable Reeling Drum.

Before putting the Cable Reel in Operations, following points must be ensured.

1) Ensure that installations and Electrical Connections are in order as per Electrical Circuit of the main machine and Cable Reeling Drum.

2) Confirm that main machine is ready for the operation and all travel end and safety switches are installed as per travel requirement.

3) Confirm the feed point connections are securely clamped.

4) All safety Switches are installed at their location and connected as per circuit requirement.

5) Cams of Gear Rotary Limit switch are correctly set by competent commissioning Engineer as per Cam Sequence diagram (Copy of drawing is enclosed with this write up)

II- Safety switches and Operational Switches of Cable Reeling Drum.

Following switches are provided with each Cable Reeling Drum.

A) **Over Tension Switch- 2 no.**

The over tension switches are mounted on the roller of guide way on each side. When Cable tension value exceeded by 1.3 times the safe pulling tension of the cable the switch operate and stop the machine.

B) **Under tension Switch-1 no.**

The Under tension switch operate when drive unit of Reel fails to recover the cable properly on the Reel. While passing the center feed point, the function of the under tension switch is bypassed by the Geared Rotary limit switch.

C) **Directional Sensor Switch-2 nos.**

These switches are operate, when payout commences and switch off the drive motor of the Reel.
The directional switch should be operated in any one direction along travel of machine. When machine travel in right direction from feed point, then left directional (L.S) should be in operating condition and when machine travel in left direction then right directional (R.S) should be in operating condition.

D) **Geared Rotary Limit Switch-1 no.**

The function of this switch is to detect the limit of travel of Cable Reel at each end extremities (in event of fail of travel end switches of machine) and to bypassed the Under tension switch, when Reel passes over the center feed point.

The Mobile Equipment would be started from any where from its travel path, provided that following set correctly and not on tripped position.

a) Under Tension Switch.
b) Over Tension Switches.

On start of travel motors of the machine, if machine movement is left extremity side from feed point (cable unwinding from drum), R.H directional sensor switch will get energies and give signal to main Control console of the machine and drive motor of the reel stop on receipt of command from console.

After reaching the machine on left end extremity, end limit switch of the machine will operate and travel drives of the machine stop for the set pause time and starts to operate in reverse direction (to move toward center supply point). Drive unit of reel get start simultaneously and start wounding of cable on drum.

When Cable Reel comes closer to central feed point, Geared rotary switch will get energies and bypassed the under tension switch in this transition zone. When Reel passes the right side of the feed point, the L.H. Directional sensor will come into operation and stop the Reel motor as per set delay time in logic of the program.

On reaching the machine on R.H. side extremity, travel drives of the motor will stop as per set pause time in program and than start to operate toward left hand side. Travel Drive of Reel also start and start wounding of Reel.

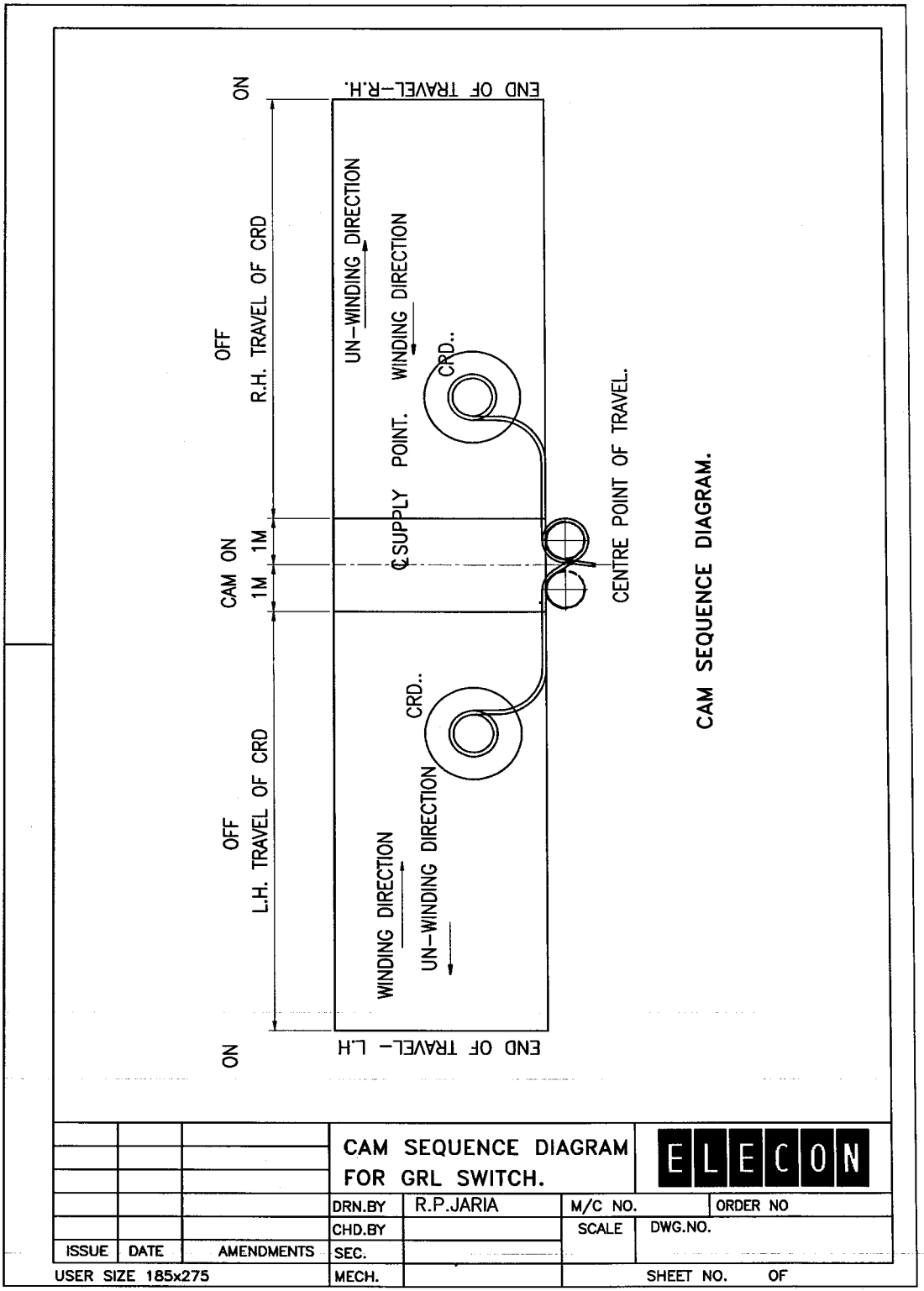
ON
OFF
R.H. TRAVEL OF CRD
END OF TRAVEL–R.H.
UN–WINDING DIRECTION
WINDING DIRECTION
CRD..
CAM ON
1M
1M
℄SUPPLY POINT.
CENTRE POINT OF TRAVEL.
CAM SEQUENCE DIAGRAM.
OFF
L.H. TRAVEL OF CRD
CRD..
WINDING DIRECTION
UN–WINDING DIRECTION
ON
END OF TRAVEL– L.H
CAM SEQUENCE DIAGRAM
FOR GRL SWITCH.
ELECON
DRN.BY
R.P.JARIA
M/C NO.
ORDER NO
CHD.BY
SCALE
DWG.NO.
ISSUE
DATE
AMENDMENTS
SEC.
USER SIZE 185x275
MECH.
SHEET NO.
OF

SECTION - 2

MAIN COMPONENTS FOR CABLE REELING DRUM

The Mono-spiral Cable Reeling drum consists of following Main Components.

1. Drum body
2. Drive Unit
3. Slipring Assembly
4. Roller Guide way

2.1 Drum body:

The drum design depends on cable diameter and its characteristics.

The Drum Body is Made from Rectangular /square hollow sections.

2.2 Drive Unit:

The drive unit consists of followings.

(1) PBL make flange mounted Geared Motor with Brake.

(2) Elecon make Worm Reduction Gear Box with Controq unit.

2.2.1 Operation of Contorq Unit :

The Contorq unit has been developed to provide an accurate controlled torque for reeling cable and suitable for specialised application like cable Reeling drum. The Contorq itself is a slipping interface using UHMW polyethylene discs incorporated in a Gear wheel of a contorq unit and the Gear is mounted on Worm Shaft of 6” NUR Worm Gear Box.

The Pinion drives the Gear wheel of Contorq unit should be mounted on a output shaft of flange mounted Geared motor.

The Contorq is a continuously slipping device consists of a series of discs held in position circumferentially and radially and pressing against friction faces, which are connected alternatively to a hub on drive shaft and to a gear, which runs freely on bearings mounted on hub.

The pressure of The friction discs on the faces is applied by spring pressure, which is adjustable. The whole assembly runs in synthetic oil (Servomesh SP-460) which not only lubricates the Gear and Bearings but also act as a coolant.

Torque is transmitted, when slip occurs between gear and hub and this torque can be adjusted to suit requirement of drive.

2.3 Slipring Assembly:

Slipring must be of a size and type sufficient to carry nominated cable current and voltage system.
The slipring assembly must be enclosed in a dust proof cover.
Slipring is used to transfer Electric power through cable from cable reel to moving machine.
The slipring required well-polished and cleaned surface for good contact.

2.4 Roller Guide Way:

The selection of rollers and roller guide depends on cable diameter. In Mono-spiral type CRD, The Roller Guide is fixed with crane structure. The Rollers of the Roller Guide should be contoured type to provide an accurate guidance for winding and unwinding of the cable on drum.

The Rollers can be rotated on sealed ball bearing protected externally by seals. Individual roller shall be removable without dismantling the Guide.

Roller Guide supplied with following safety devices, which will protect the cable from external forces.

1) Over Tension limit switch
2) Under Tension limit switch
3) Directional sensor limit switch.
   (Travel forward and reverse limit switch).

FUNCTIONS OF LIMIT SWITCHES:

1) Over Tension Limit Switch:

The switch shall be mounted on bottom roller of the guide way on each side. When cable Tension exceeded by 2.3 times the safe pulling Tension of cable. The switch operates and stops the machine Travel motor.

2) Under Tension Limit Switch:

The under Tension limit switch intended to detect when drive unit fails to recover the cable properly. While passing center feed point, the function of Under Tension switch is bypassed by Geared rotary limit switch.

3) Directional Sensor Switch:

To switch off the CRD motor when payoff (unwinding) commenced.

4) Geared Rotary Limit switch:

To bypass the Under tension switch at the center zone.

SECTION – 3

TECHNICAL SPECIFICATION:

ORDER NO.-CO/2223-2281, MACHINE NO. HM/545-573-574-575.

CLIENT – M/s.IFFCO PARADEEP.

1. POWER CABLE REELING DRUM – G.A DRG NO. R04415/3/M

A DATA:

1.	TYPE OF CRD	-	MONOSPIRAL REEL
2.	MACHINE	-	FULL PORTEL SCRAPER RECLAIMER
3.	TRAVEL SPEED OF M/C	-	10 M/Min

B DRIVE UNIT:

1.	DRUM SIZE	-	d = 1500 , D = 3200 , L = 69 MM
2.	TYPE OF DRIVE	-	CONTORQ DRIVE UNIT
	SIZE	-	CT-60 BHT NUR DRIVE
	KW	-	0.75 KW x 150 RPM
	MAKE	-	M/S ELECON

C ELECTRICALS:

1.	CABLE DETAILS	-	3.5 C x 150 SQ. MM
2.	CABLE DIA.& LENGTH	-	Ø66.5 mm , 68 Mtr.+2 NO. D.T.
3.	CABLE WEIGHT	-	8.6 kg/Mtr
4.	SAFE PULLING TENSION	-	795 Kgs.
5.	SLIPRING	-	3P+E, 600 AMP, 1.1 KV
	MAKE	-	SUPREME INDUSTRIES
6.	OVER TENSION SWITCH	-	TYPE - 45 – 63,
	MAKE	-	JAI BALAJI
7.	UNDERTENSION SWITCH	-	TYPE - ZCK J1 + ZCKE08
	MAKE	-	TELEMECHANIQUE
8.	DIRECTIONAL SENSOR	-	TYPE – 45 – 63
	MAKE	-	JAI BALAJI
9.	GEARED ROTARY SWITCH	-	TYPE – GRLS
			RATIO – 48:1
	MAKE	-	ELEKTROMAG

SECTION – 3

TECHNICAL SPECIFICATION:

ORDER NO.-CO/2223-2281, MACHINE NO. HM/545-573-574-575.

CLIENT – M/s.IFFCO PARADEEP.

1. CONTROL CABLE REELING DRUM – G.A DRG NO. R04416/3/M

A DATA:

1.	TYPE OF CRD	-	MONOSPIRAL REEL
2.	MACHINE	-	FULL PORTEL SCRAPER RECLAIMER
3.	TRAVEL SPEED OF M/C	-	10 M/Min

B DRIVE UNIT:

1.	DRUM SIZE	-	d = 800 , D = 2100 , L = 39 MM
2.	TYPE OF DRIVE	-	CONTORQ DRIVE UNIT
	SIZE	-	CT-60 BHT NUR DRIVE
	KW	-	0.75 KW x 150 RPM
	MAKE	-	M/S ELECON

C ELECTRICALS:

1.	CABLE DETAILS	-	12Cx2.5 SQ.MM+8C(4 P)x 1.5(S) SQ. MM, 1.1KV
2.	CABLE DIA.& LENGTH	-	Ø36 mm , 68 Mtr.+2 NO. D.T.
3.	CABLE WEIGHT	-	1.53 kg/Mtr
4.	SAFE PULLING TENSION	-	64 Kgs.
5.	SLIPRING	-	12PX25A+8X25A(S)
	MAKE	-	SUPREME INDUSTRIES
6.	OVER TENSION SWITCH	-	TYPE - 45 – 63,
	MAKE	-	JAI BALAJI
7.	UNDERTENSION SWITCH	-	TYPE - ZCK J1 + ZCKE08
	MAKE	-	TELEMECHANIQUE
8.	DIRECTIONAL SENSOR	-	TYPE – 45 – 63
	MAKE	-	JAI BALAJI
9.	GEARED ROTARY SWITCH	-	TYPE – GRLS
			RATIO – 48:1
	MAKE	-	ELEKTROMAG

SECTION – 4

CABLE FITTING INSTRUCTIONS:

1. Fit the correctly designed cable only.
2. Check the cable diameter and weight as per final cable details.
3. Lay the cable on ground and remove unwanted kinks or twists.
4. Ensure that, the cable length should not exceed for which reel was designed
5. Feed the cable on drum through roller guide and secure the one end of cable on drum with clamps provided.
6. The end of cable is passed through hollow shaft and connects the slipping.
7. It is important to ensure that the laid out cable is free from twists and kinks prior to recovery on the reel. If, any twisting found in the cable, power may turn off and cable disconnect from feed point and remove the twists.

SECTION - 5

SLIPRING MOUNTING INSTRUCTIONS:

1. The slipping shall be mounted on the hollow shaft.
2. All brushes are properly contacted with slipping and it must be well polished and have cleaned surface.
3. The brushes are properly mounted on the brush holder.
4. Power supply remains off during mounting of the slipping.
5. After properly mounting of the slipping, complete the wiring
6. Mount the slipping cover.

SECTION - 6

INSTALLATION INSTRUCTION:

1. Mount the drum horizontally on the drive unit.
2. Mount the slipping.
3. Connect the one end of the cable to the junction box.
4. Mount the cable guide way at proper location and ensure that It is perpendicular to the drum axis
5. Mount the limit switches on the cable guide way.
6. Complete the wiring of the limit switches and motors and its connections as per wiring diagram.
7. Mount the cable on drum through the roller guide way.
8. Connect the one end of the cable to the slipring through the drum shaft.
9. Mount the GRLS switch and cut the cam as per cam sequence diagram.
10. Fill up the lubricating oil as per lubrication schedule.
11. Check the manual operation of the brake, by releasing the brake lever to allow free rotation of reel.
12. Check all the installations prior to operation.

SECTION - 7

MAINTENANCE INSTRUCTIONS:

1. Geared motor with brake.

   Refer instruction manual for PBL Geared Motor

2. Worm Gear Box With Contorq Drive Unit.

   Installation, Operation, Maintenance and Spare Part Manual for Worm Reduction Gear Unit.

   Refer operation, maintenance and spare parts manual for 6" NUR CT- 60 BST/BHT (dual drive for Radial Reel) Contorq units.

INSTRUCTIONS:

a) Check the tightness of all fasteners after one month of operation and then after at every six months.
b) The slipping and brushes shall be inspected every six months to ensure good contact must be maintained.
c) Worn brushes shall be replaced.
d) Ensure that all covers shall be properly fitted.
e) All bearings shall be properly lubricated.
f) Ensure that, motor must be switched off during unwinding.
g) Change the oil of Contorq unit after 250 working hours after commissioning and then after every one or one and half year.
h) Replacement of Contorq unit.

   Restrain the reel periphery.
   Drain the oil from gearbox.
   Remove the flange mounted geared motor.
   Install new contorq unit.
   Reverse the above of procedure.

i) Adjustment of Torque of Contorq unit.

   Restrain the reel periphery.
   Drain the oil from gearbox.
   Remove the flange mounted geared motor.
   Rotate the castellated nut in to clockwise direction to increase the torque and anti clockwise to decrease the torque.
   Reverse above procedure for re-fitting.

LUBRICATION SCHEDULE:

MONOSPIRAL CABLE REELING DRUM

SR NO	ITEM	TYPE OF LUBRICATION	TYPE OF LUBICANT	QTY REQUIRED/ITEM		PERIOD OF RE-LUBRICATION	TOTAL QTY REQUIRED /YEAR
				OIL	GREASE		
1	GEAR OF GEARED MOTOR	S	SERVOMESH SP-460 MAKE – INDIAN OIL	0.75 LTR		F & Y	3 LTR
2	WORM GEAR BOX WITH CONTORQ UNIT	S	SERVOMESH SP-320 MAKE – INDIAN OIL	10.5 LTR		F & Y	42 LTR
3	CHAINS	H	MINERAL OIL SAE-40 OR 60	1 LTR		T	1 LTR

S = SPLASH LUBRICATION, H= HAND LUBRICATION

F = FIRST OIL CHANGE AFTER 250 HRS,

Y= YEARLY,

T = ONCE IN 3 MONTHS

MANUAL

FOR

PBL

HELICAL GEARED

MOTOR

WITH

GEARED REDUCER

INSTRUCTION MANUAL FOR HELICAL INLINE GEARED MOTORS/REDUCERS

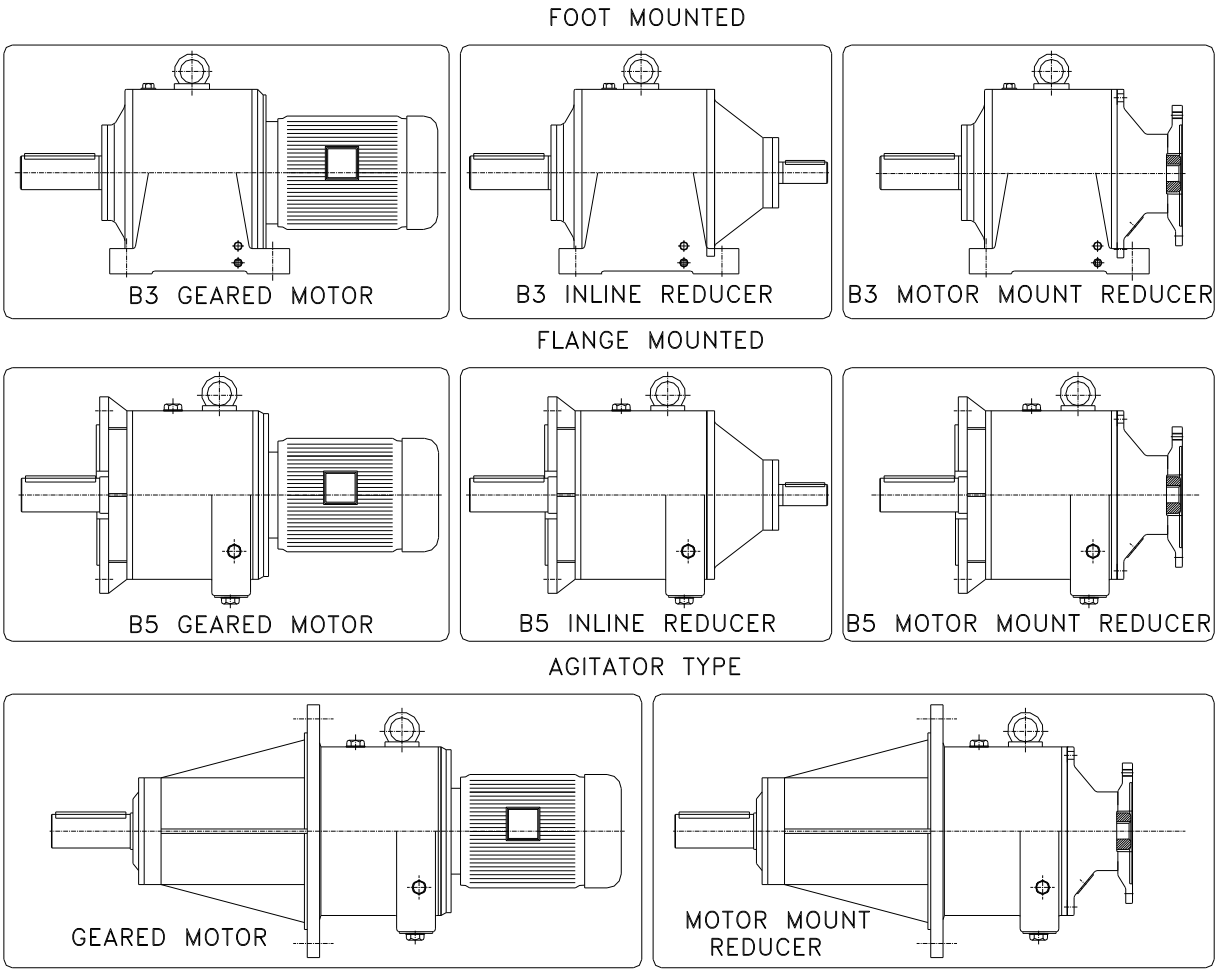

POWER BUILD LIMITED

POST BOX NO. 28, VITTHAL UDYOGNAGAR – 388 121, GUJARAT, INDIA
TEL. : +91-2692-231070, 231120, 231170, 232118, 236488 FAX : +91-2692-236559
E-MAIL : infopbl@elecon.com Website : www.pbl.co.in

NOTES TO USERS

We are pleased to enter your name in our customers list and greatly appreciate your decision in selecting PBL Geared Motors/Gear Speed Reducers.

This instruction manual covers some essential procedures for installation, operation and maintenance. Before operating the unit, you should first thoroughly read this manual.

During the warranty period, the geared motors/reducers must not be opened without our consent, last warranty will be forfeited. We do not honor any claims raised during the warranty period, which would arise from alterations or repairs carried out without our consent.

1. To start with, check the following points to see

1.1 the items indicated on the nameplate are in conformance with your requirements.
1.2 there is no damage to the unit due to humidity or dirt accumulated in transit.
1.3 operating conditions of driven machine (load, frequency of start and degree of shock) do not differ from the ones indicated at the time of order. Please contact PBL if there is any deviation.

2. STORAGE

If geared motors/reducers have to be stored or the operation has to be stopped for more than 3 months, please follow the procedures given bellow.

2.1 In case geared motors/reducers are to be stored duly packed, for a long period of time:

(a) Geared motors/reducers have to be stored Indoor or the clean and dry place, where there is no vibration and major changes in temperature.
(b) Rotate shaft by hand every 3 months to prevent bearing from rusting; confirm that shaft rotates smoothly and there is no abnormal noise.
(c) Check the insulation resistance with insulation resistance tester of 500V every 3 months and make sure that the value is more than 1MΩ
(d) Before operating geared motors/reducers, please check the insulation resistance and carry out the inspection of bearing to see there is no abnormality.

2.2 In case geared motors/reducer are stored after installation with machine for a long period of time (over 6 months in general condition, over 3 months in hot and humid place):
(a) If geared motors/reducers are exposed to high humidity or if there is possibility water or foreign particle to enter in the units, cover geared motors/reducers with polyethylene sheet.
(b) Run geared motors/reducers for about 5 minutes every 3 months to prevent bearing from rusting.
(c) Before operation, check the insulation resistance, inspect bearing and the connection to power supply source, etc. to see that there is no abnormality.

3. TIPS ON INSTALLATION

3.1 When installing the Geared Motors/Reducers, make sure that the foundations or the base frames do not notably tend to vibrate. The load-bearing surfaces, base plates or flanges, should bear the weight uniformly, and be properly tightened.

3.2 Belt pulleys, couplings or gears, which are to be fitted to the output shaft, must have a bore of ISA fit H7. Remove machining burrs if at all on the bore. Apply thin film of oil on shaft and fit transmission part by means of a pull-on device which may be screwed into the tapped hole in the shaft stub. It is advisable to heat the part prior to fitting. Avoid hammer blows.

3.3 Cautions for installation of foot mounted type:

(a) Ensure that installation is always performed on a reliable machined foundation.
(b) Avoid uneven clamping when you lock the unit on the bed.

3.4 Cautions for installation of flange mount type:

(a) Care must be exercised to ensure that installation is always performed on a machined face.
(b) After the geared motor/reducer has been positioned by means of the spigot joint of the bracket, tight it firmly.
(c) Connect the output shaft (low-speed shaft) and the driven shaft by means of a “flexible coupling”.
(d) When radial load and thrust load are applied to geared motor/reducer, install driven shaft block on the machine in which bearing are fixed to absorb the load adequately.

4. CONNECTION WITH THE DRIVEN MACHINE

Since output shaft (low-speed shaft) and input shaft (high-speed shaft) are protected with rust preventive coating, remove it with thinner or a similar solvent.

4.1 Direct Connection

(a) When the input shaft of the driven machine and the output shaft (low-speed shaft) of the geared motor/reducer are coupled directly, use a “flexible coupling” and make sure that both ends are in alignment. (Refer to Fig. 1.)

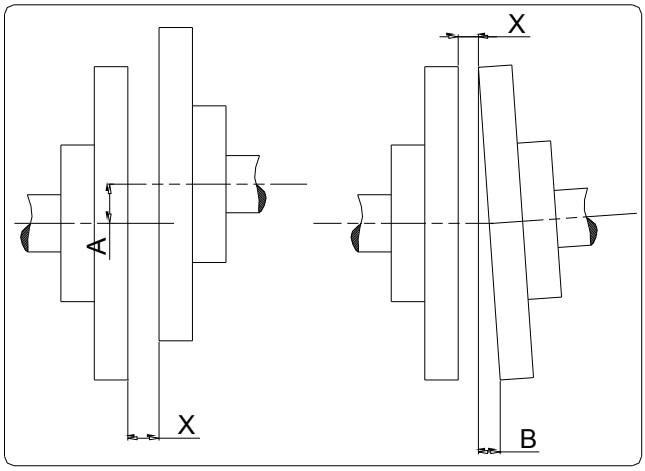

Allowance of Dimension A	0.05 mm
Allowance of Dimension B	0.04 mm
Dimension X	Specified by coupling maker

Fig. 1 Accuracy of alignment of direct coupling connection

4.2 When the machine is driven by V-belt, chain or gearing

Make arrangement to ensure that the shaft of driven machine and that of geared motor/reducer is positioned parallel. When the machine is driven by V-belt or chain, ensure that the center distance is not too long by setting the proper distance and belt and chain are stretched at right angle. When the machine is driven by gearing, geared motor/reducer should be installed setting up the accurate center distance and avoiding partial bearing of gears, and the output shaft is pushed downward.

(a) Point of load application on the output shaft:

When load (overhung load) is applied on the tip of the shaft, it may cause damage to the shaft. The gearing or chain sprocket wheel must be mounted such that the point of load application is as near as possible to the face of the unit to minimize overhung load.

(b) Tension of chain:

When using chain, it is necessary to give suitable slack to chain. If the tension of chain is too loose, excessive shock will be generated at starting or load fluctuations, which may damage both the geared motor/reducer and the driven machine. Generally, the recommended amount of slack is 2% of span distance. (Refer to Fig. 2.)

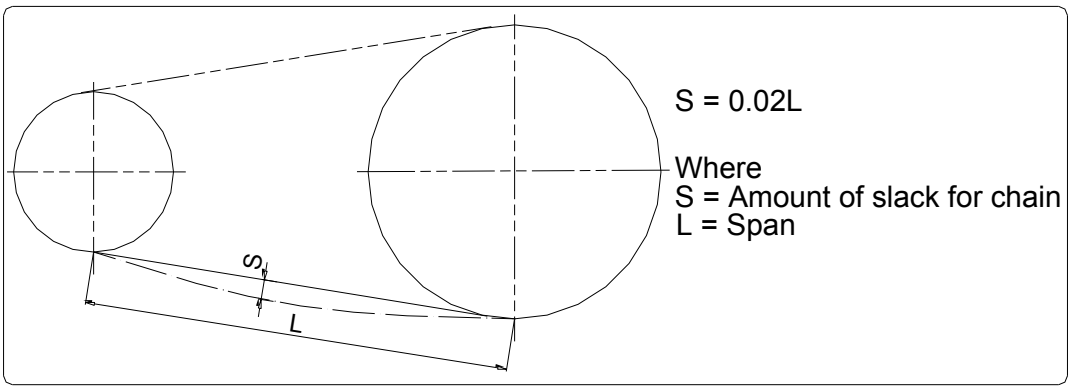

Fig. 2

(c) Layout of chain driving:

When using chain horizontally for connection with the drive and the driven machine, arrange shafts so as to give tension to the upper side of chain. Shaft arrangement of vertical transmission is not recommended, however, if necessary, the large wheel should be positioned at lower end

(d) When load (overhung load) is applied on the output shaft, please make sure that it is within the limit of allowable value. Allowable value of overhung load is shown in graph of catalogue.

4.2 Dimension of keyway

Dimension of the shaft end keyway is in accordance with DIN 6885.

5. *Connection to Power System*

All geared motors are factory-adjusted for maximum voltage if not stipulated otherwise. Make sure that the voltage on the installation site coincides with that indicated on the rating plate of the motor. The direction of rotation may be changed by interchanging two phases of the mains.

The geared motors are connected to the power supply system like any other three-phase A.C. motors. There are no special instructions for Geared Motors beyond applicable for standard electric motors. The feed lines should be of sufficient diameter to avoid any notable drop of voltage upon starting the geared motors.

It is advisable to fit a protective motor switch with adjustable overload relays. This switch, which is adjusted to the motor rating, cuts out all three phases in case of overload or failure of one phase. The normal fuses can not give sufficient overload protection.
The connection diagram given below shows the usual types of connection of three-phase A.C. squirrel cage motors.

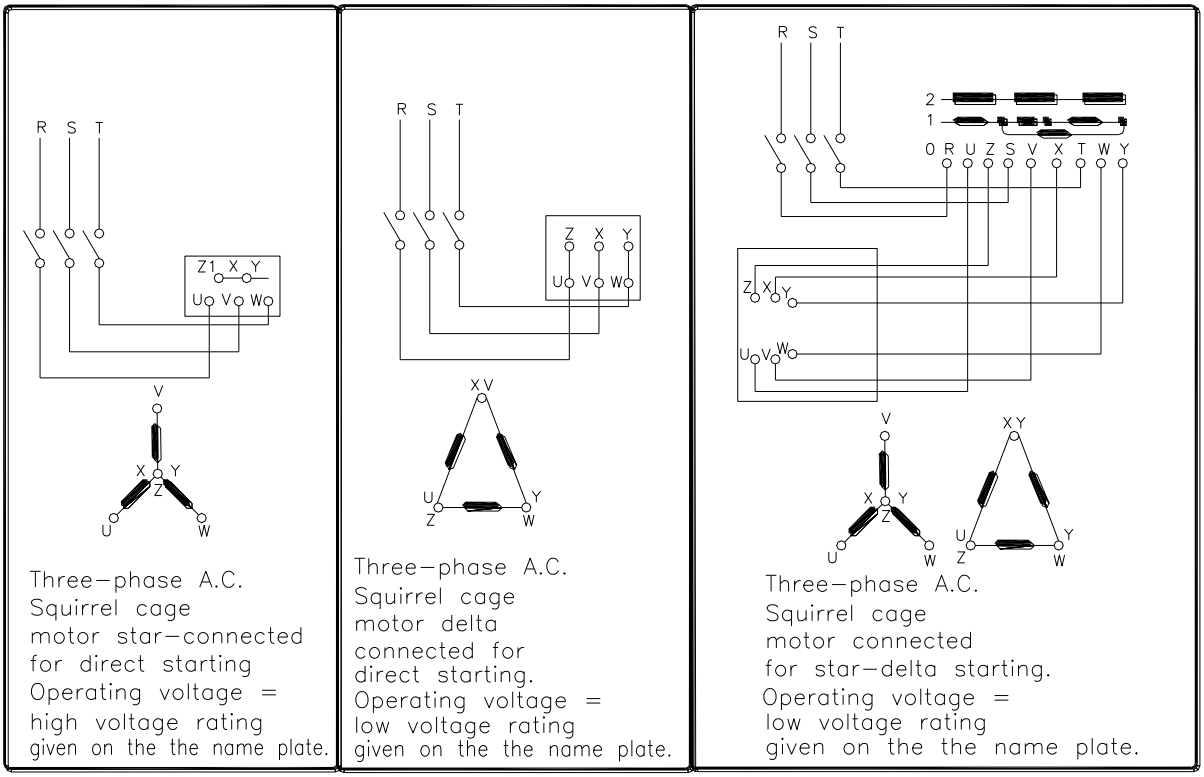

Geared Motors with pole and voltage changing system as well as motors for braking gears are provided with special connection diagrams which will be found on the inside of the terminal box of each motor.

6. Lubrication and Lubricants

All geared motors/reducers delivered are suitable for oil lubrication. They are not filled with oil and ensure that correct grade of oil is filled in before putting geared motors/reducers in operation. Grease lubricated geared motor/reducer will be delivered upon special request. The oil level may be checked at the sight glass. The filling plug is always located at the highest point of the gear housing, whereas the drain plug is at the lowest point.

The oil grade used permits approx. 5000 to 8000 hours of operation between re-fills. However if other machinery nearby requires oil changes at shorter intervals, the geared motors/reducers may be included in this servicing cycle. The first change of oil should preferably be made after approximately 300 to 500 operating hours.

After the above-mentioned number of operating hours, the oil should be changed. This can easily be done with geared motor/reducer running. Unscrew oil drain plug (position of plug being indicated in the catalogue referring to this particular type of unit) and allow used oil to drain off. Unscrew filler plug (vent plug) and pour in half the quantity of a normal oil fill (stated in the lubricating table) for flushing. After flushing oil has drained off, clean drain plug and screw it in. Now pour in fresh gear oil through filler hole till visible in the sight glass. The required quantity of oil is indicated in the lubricating table. Finally screw the filler plug and ensure that it is properly tightened.

During oil change it is recommendable to apply some oil to the sealing ring on the shaft to keep off dirt and to reduce wear of sealing lip.

The initial fill of gearbox should normally be an oil with the following characteristics:

Viscosity : 30°E at 50°C (abt. 250 cS)
Flash point : +230°C
Pour point : 20°C

Grease-lubricated gearbox will be delivered upon request. These are filled with grease of the following characteristic:

Worked penetration : abt. 350 ASTM (measured with 50 g cone at 25°C NLGI Grade O.
Drop point serviceable: Over 150°c down to abt. -30°C

The additives in the greases should not attack the seals, the bearings and the gear teeth. Different types of grease should not be mixed.

Lubricating Table

The quantity of lubricating oil to be filled in for various sizes and mountings of gear portion are given in the table.

OIL CAPACITY OF GEARED MOTORS/REDUCERS

Type of Gear	Design B3 & B5 Liters	Design B6 & B7 Liters	Design B8 Liters	Design V1 & V5 Liters	Design V3 & V5 Liters	Design Agitator Type Liters
32	0.5	0.75	1	1.25	1	1.7
33	0.75	1.25	1.3	2.25	2	2.7
42	0.75	1.25	1.3	2.25	2	2.7
43	1.25	2.25	2.3	3.25	3	3.7
52	1.25	2.25	2.3	4.5	4	5.8
53	1.75	3	3.25	5	4.5	6.3
62	1.75	3	3.25	6.75	5.25	8
63	2.5	4.25	4.5	7.25	7.75	8.5
72	2.5	4.5	4.75	9.5	9	13.5
73	3.75	7	7.5	11.5	10.5	15.5
82	4.5	7.5	8	17.5	17.5	24.5
83	7.5	14	14.5	22	20	27
93	10	20	21	30	28	38
103	16	30	32	45	42	61
113/123	37	63	52	120	135	148

LUBRICATION OIL RECOMMENDATIONS

BRAND	GRADE OF OIL	GREASE FOR BEARINGS
INTERNATIONAL BRAND		
BRITISH PETROLEUM	ENERGOL GR-XP 320 OR GR-XP 460	ENERGREASE LS 2
CASTROL	ALPHA SP 320 OR ALPHA SP 460	EPL 2
CALTEX	MEROPA 320 OR MEROPA 460	STARFAX PREMIUM 2
ESSO PETROLEUM	SPARTAN EP 320 OR SPARTAN EP460	BEACON 2
FUCHS	RENOLIN CLP 320 OR RENOLIN CLP 460	FWA 160
MOBIL OIL CO.	MOBILGEAR 632 OR MOBILGEAR 634	MOBILUX 2
SHELL CO.	OMALA 320 OR OMALA 460	SHELL ALVANIA 2
INDIAN BRANDS		
INDIAN OIL	SERVOMESH – SP 460 OR SP 320	SERVO GEM – 2
HINDUSTAN PETROLEUM	PARTHAN – EP 460 OR EP 320	BEACON 2
CASTROL	ALPHA SP 320 OR ALPHA SP 460	EPL 2
GULF	EP LUBRICANT 460 OR 320 HD	M.P. GREASE 2
BHARAT PETROLEUM	AMOCAM 460 OR 320	M.P. GREASE 2

7. PERIODICAL INSPECTION/REPAIR

The frequency of inspection and repair should be different according to the operating condition, however, please conduct inspection and repair with reference to the following table. (It is based on the operation of 10 hrs/day.)

Inspection / Repair items	Frequency	How to determine the necessity of parts replacement
Restretch of chain	6 months	If the tension of chain is loose, restretch it.
Improper tightening of bolts	6 months	If tightening of bolts is loose, tighten additionally.
Replacement of oil seal	1-2 years	At every overhaul, or when oil leakage is found outside, replace oil seal.
Replacement of bearing	5 years	If abnormal noise occurs, replace bearing.

8. TROUBLE SHOOTING

Trouble		Cause	How to correct
Unit does not rotate in no load condition		Interruption of service	Check motor terminal voltage or source voltage.
		Breakage of wiring	Inspect circuits and repair defect.
		Open circuit exists	Replace fuse, reset overload relay, check closing breaker.
		Breakage of stator winding	Measure resistance of winding and insulation, distinguish defect of winding.
		Defect of gear	Replace gear
		Defect of key of shaft, sprocket or pulley	Replace key with a new one.
		One of three phase circuits is open and works as single phase circuit	Check motor terminal voltage or current, breakage of fuse or wiring, repair defect.
		Load is too heavy	Lower load to rated capacity or raise capacity.
		Bad contact of switch	Check motor terminal voltage or current, repair bad contact of circuit.
Motor rotates on no load but trouble occurs on load	Noisy continuous load	Invasion of foreign particle	Remove foreign particle.
		Wear or damage of bearing	Replace bearing
		Wear or damage of gear	Replace gear.
	Overload relay acts	Bad setting or improper selection of overload relay	Revise setting value, or replace with regular one.
		Load is too heavy	Lower load to rated capacity.

	Breakage of fuse or breaker works	Shortage of capacity of fuse or breaker	Investigate and replace or change setting value.
		Load is too heavy	Lower load to rated capacity.
	Overheat	Load is too heavy	Lower load to rated capacity.
		Voltage is too high or too low.	Check voltage and repair.
		Unbalance of voltage	Check source of circuit and wiring, and repair.
		Ventilation passage for cooling is closed	Remove dust and foreign articles and clean ventilation passage.
		Short circuit of motor winding	Check winding,
	Sudden drop of speed	Voltage drop	Check length of connection and capacity of source and repair.
		Load is too heavy	Lower load to rated capacity.
		Shortage of lubricant and damage in bearings	Replace bearings.
Oil Leakage		Improper tightening of each bolt	Tighten additionally.
		Defect of oil seal	Replace oil seal.
		Defect of gear case Excessive quantity of oil.	Replace gear case Adjust to proper quantity.

TROUBLE SHOOTING OF GEARED MOTOR WITH BRAKE

Trouble	Cause	How to correct
• Brake does not operate	Breakage of circuit	Check circuit.
	Faulty connection	Check connection
	Defect of D.C. source	Replace
	Voltage drop	Check length of connection
	Brake gap is too big	Adjust or replace
• Insufficient operation of brake • Braking time is too long	Distortion of inner disc	Replace.
	GD^2 is too big	Lower GD^2 or raise capacity of brake geared motor.
	Adhesion of oil or dust to inner disc	Disassemble and clean.
• Abnormal temperature rise • Smoke and smell	Torque and GD^2 are too big	Check load condition and lower load to rated capacity.
	Frequency of operation is too high	Lower frequency of operation, or change specification.
	Invasion of foreign particle in brake gap	Disassemble and clean.
• Motor beats • Motor speed does not increase • Thermal relay works	Brake gap is too big	Adjust brake gap
	Torque or GD^2 is too big	Lower load to rated or raise capacity.
	Refer to “Brake does not rotate”	

MOTOR MOUNTED TYPE GEAR SPEED REDUCER

INTRODUCTION

Here are some essential procedures for maintenance, inspection and installation.

1. Point of Motor Mounting

Please note the following points at inspection or on overhaul.

The motor mount section of this speed reducer is confirmed to the motors of flange type, three-phase, squirrel cage induction motor for general purpose. Therefore, please confirm the dimension of motor flange before you fit It, as follows:

1.1 Before mounting the motor, please make sure that the combination of motor frame number and speed reducer frame number is appropriate.

1.2 Make sure that there is no adhesion of dust on the motor shafts, then set the key accurately. Please use the key attached to the motor shaft.

1.3 Wipe out the rust-proof paint on the mounting face of motor flange by solvent.

- Special Lubricant “Shaft Lub”

In order to prevent the fretting corrosion or cold seizure at the fitting part of input hollow shaft of reducer, a special lubricant is already applied on the bore. Do not clean this lubricant while inserting motor shaft. The bore is covered with suitable plug to prevent entry of the dust. This plug has to be removed before inserting the motor shaft.

1.4 Hang the motor horizontally (vertically for type V1), fit the motor shaft in the hollow shaft. If fitting is not easy, do not force to fit and confirm that the motor is accurately horizontal. (vertical) Before coupling, please make sure that “Shaft Lub“ is applied to hollow shaft.

1.5 Tighten up bolts uniformly.

For ordering spares give following details:

1) H.P., R.P.M. and Type of Geared Motor/Gear Reducer
2) Serial Number of Geared Motor/Gear Reducer
3) Required Part No.

2-STAGE FOOT MOUNTED HELICAL GEARED MOTOR

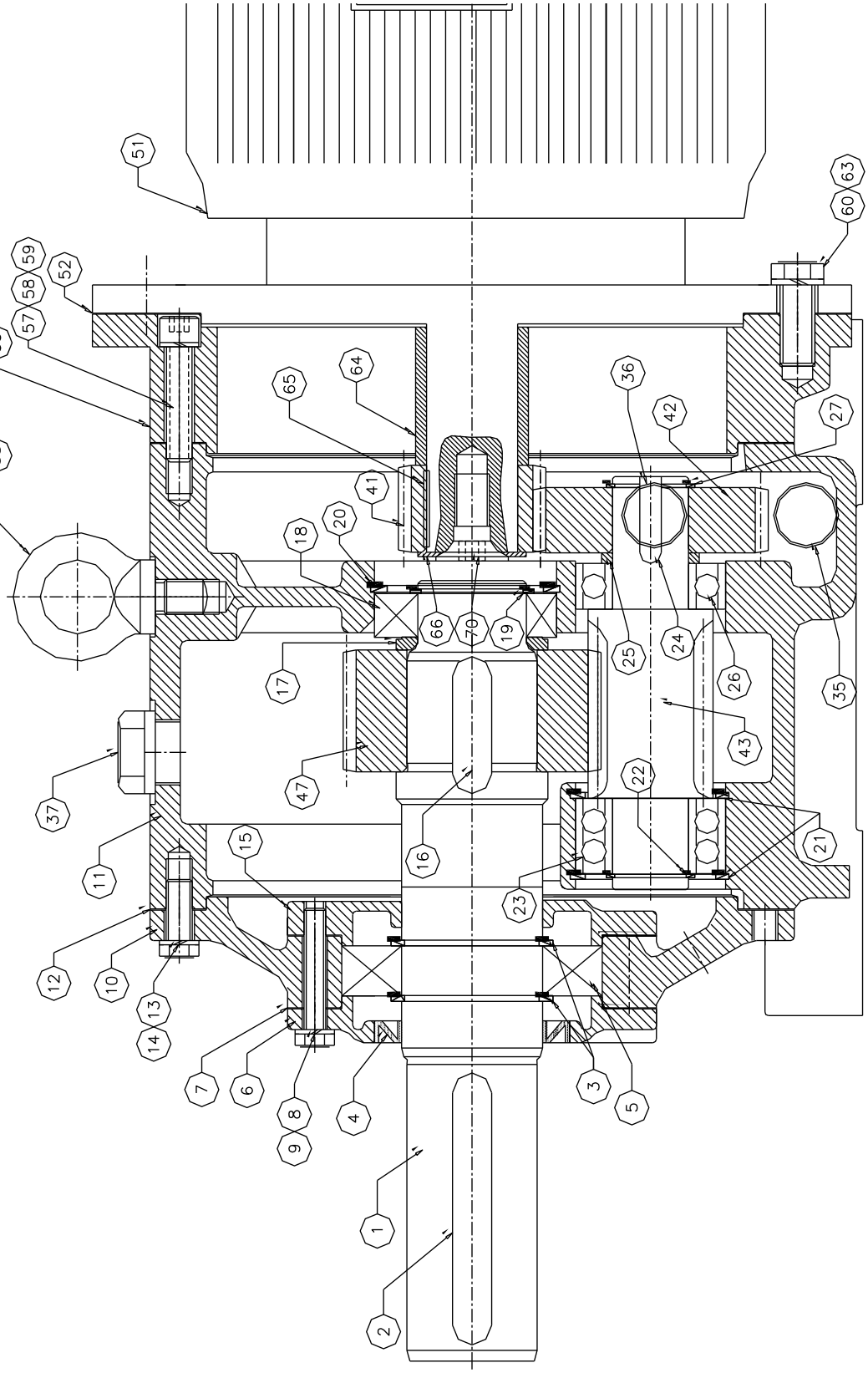

Refer Spare Part List for Part Details

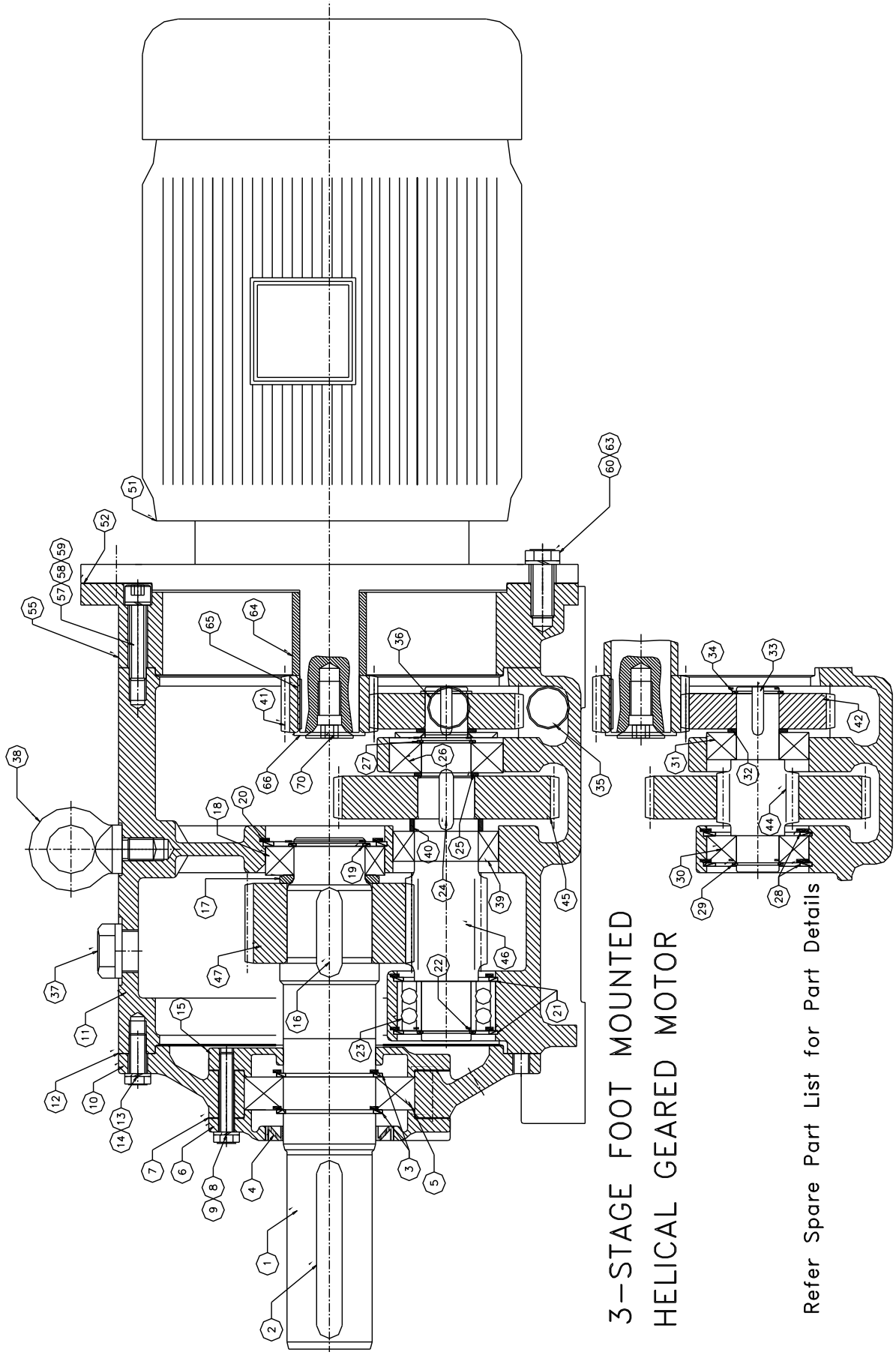
3-STAGE FOOT MOUNTED
HELICAL GEARED MOTOR
Refer Spare Part List for Part Details

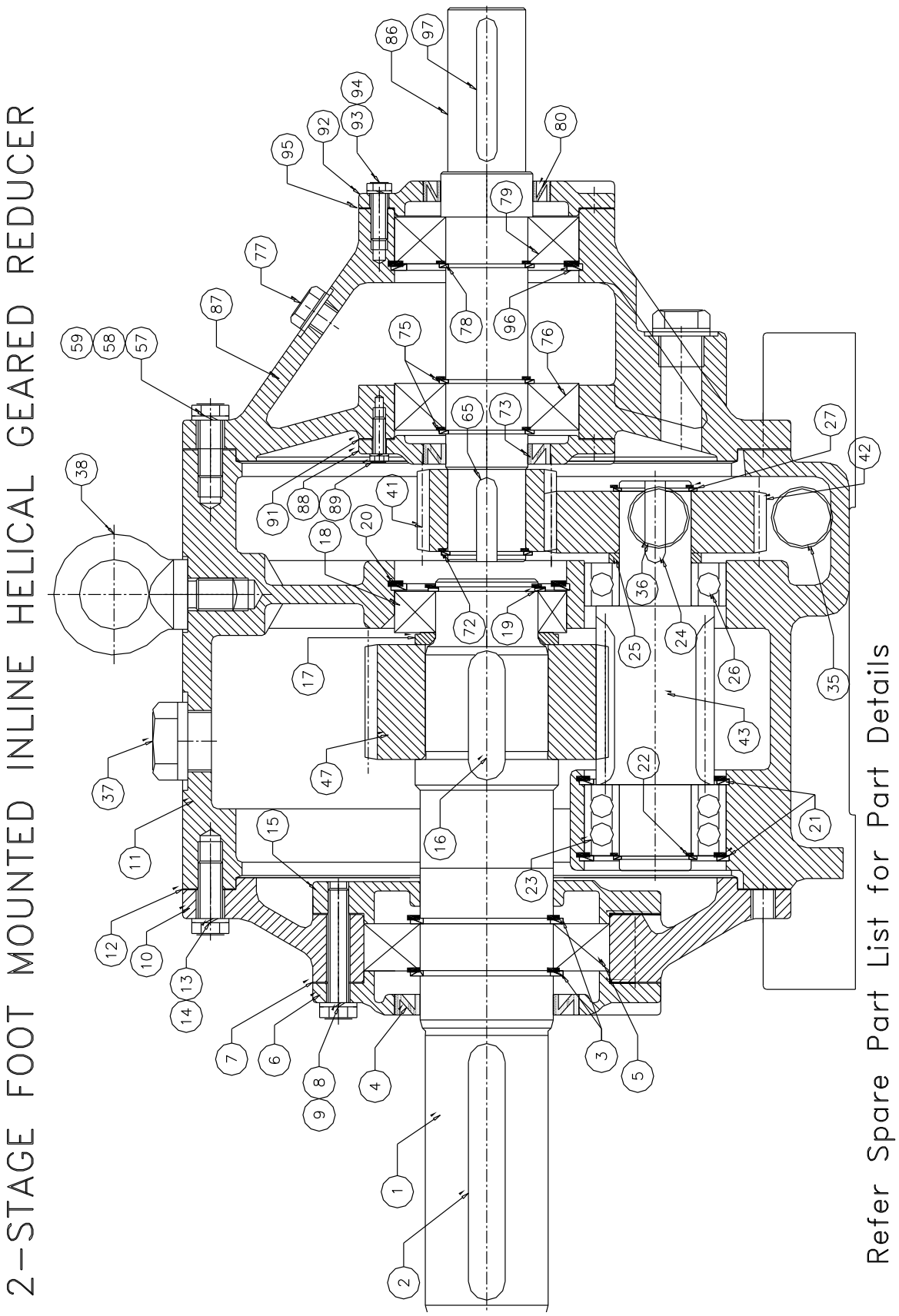
2-STAGE FOOT MOUNTED INLINE HELICAL GEARED REDUCER
Refer Spare Part List for Part Details

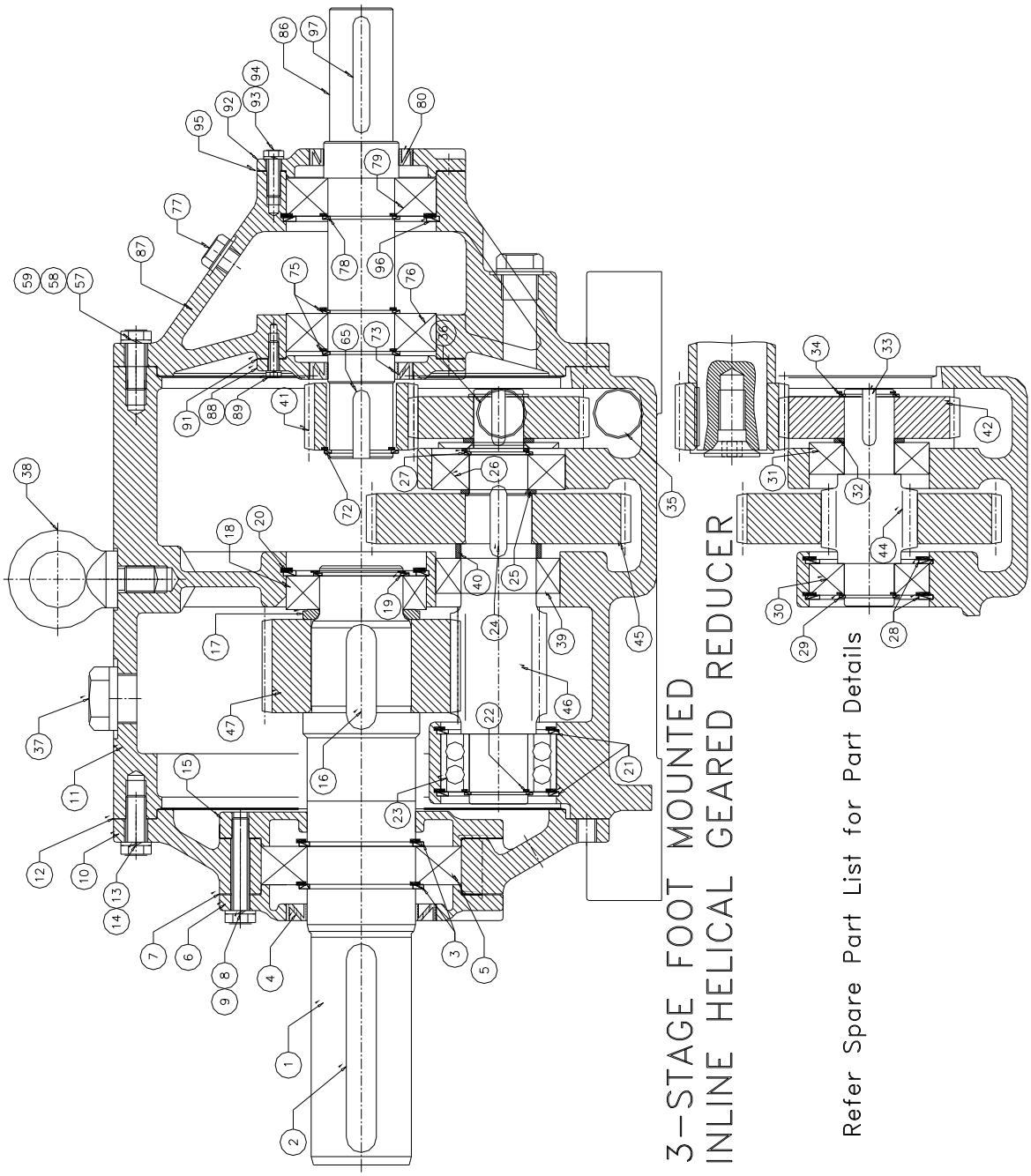
3-STAGE FOOT MOUNTED
INLINE HELICAL GEARED REDUCER
Refer Spare Part List for Part Details

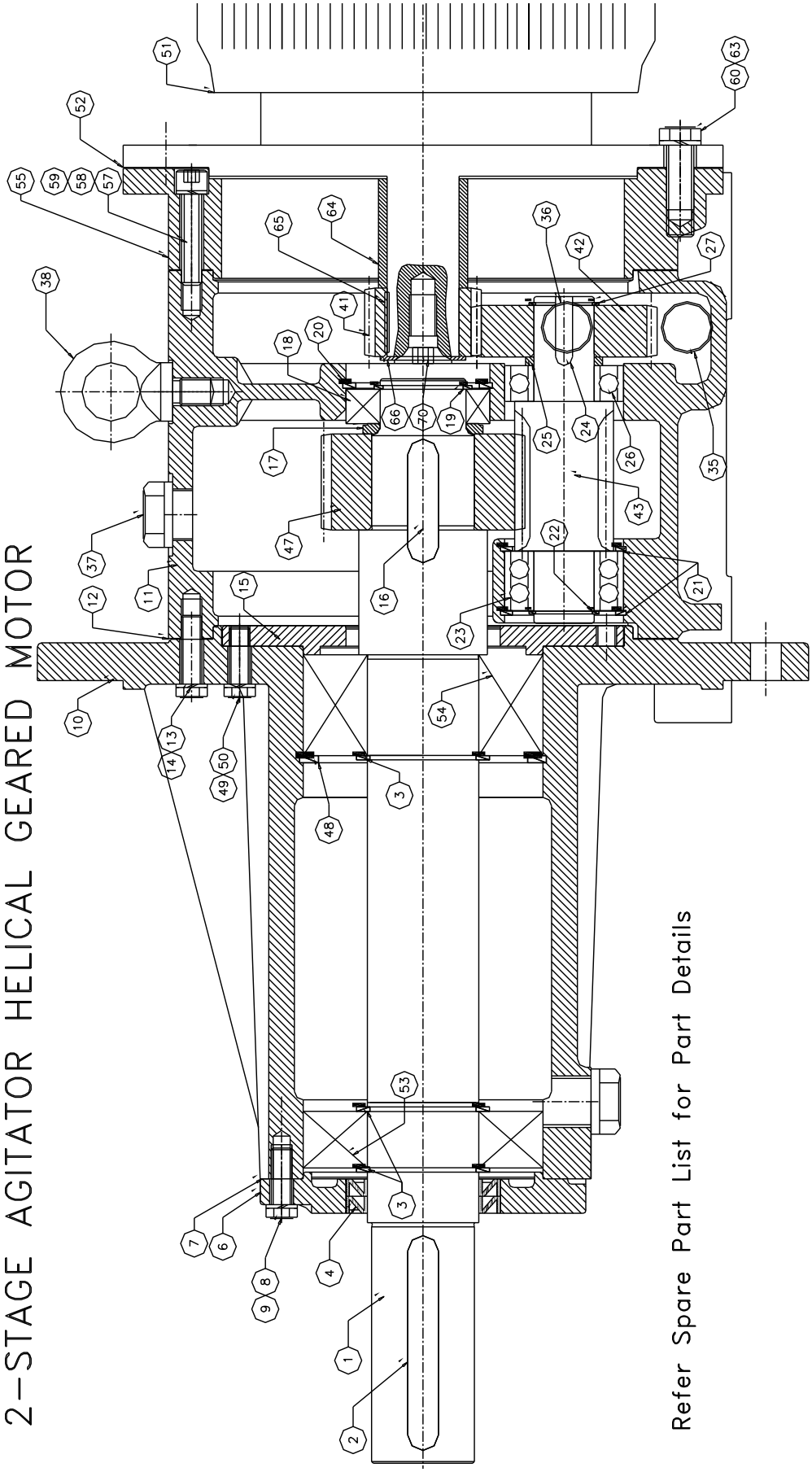
2-STAGE AGITATOR HELICAL GEARED MOTOR
Refer Spare Part List for Part Details

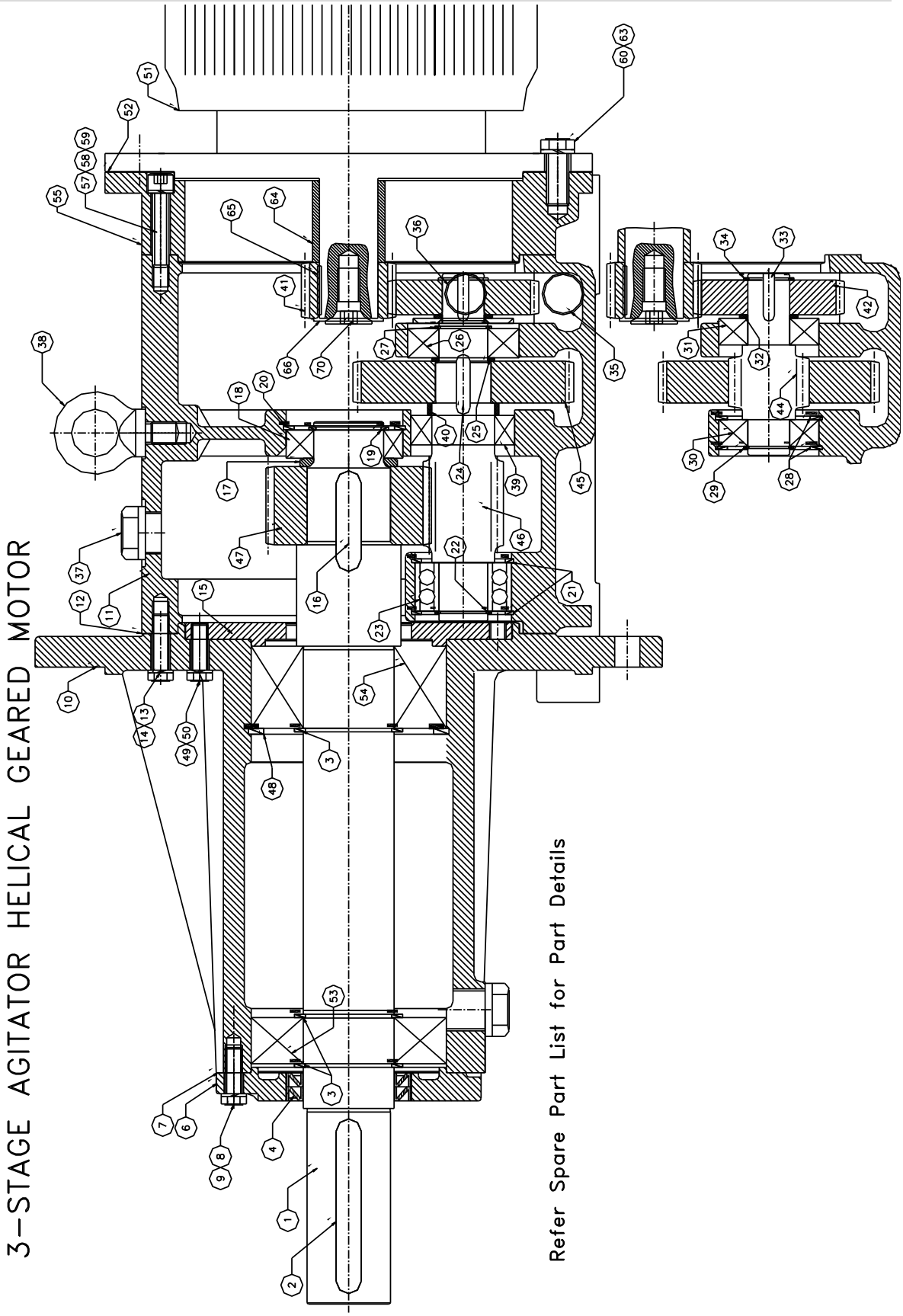
3-STAGE AGITATOR HELICAL GEARED MOTOR
Refer Spare Part List for Part Details

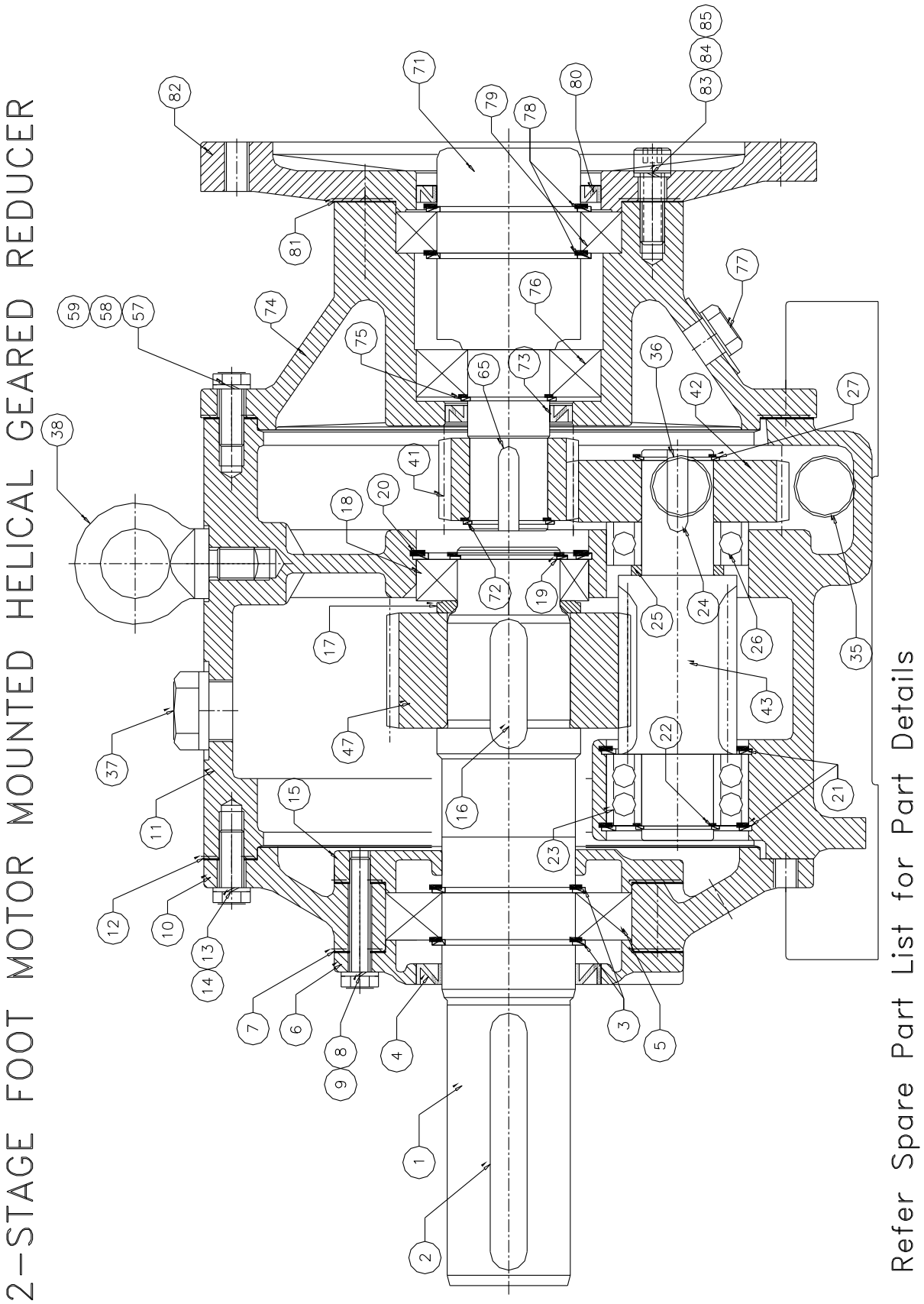
2-STAGE FOOT MOUNTED HELICAL GEARED REDUCER
Refer Spare Part List for Part Details

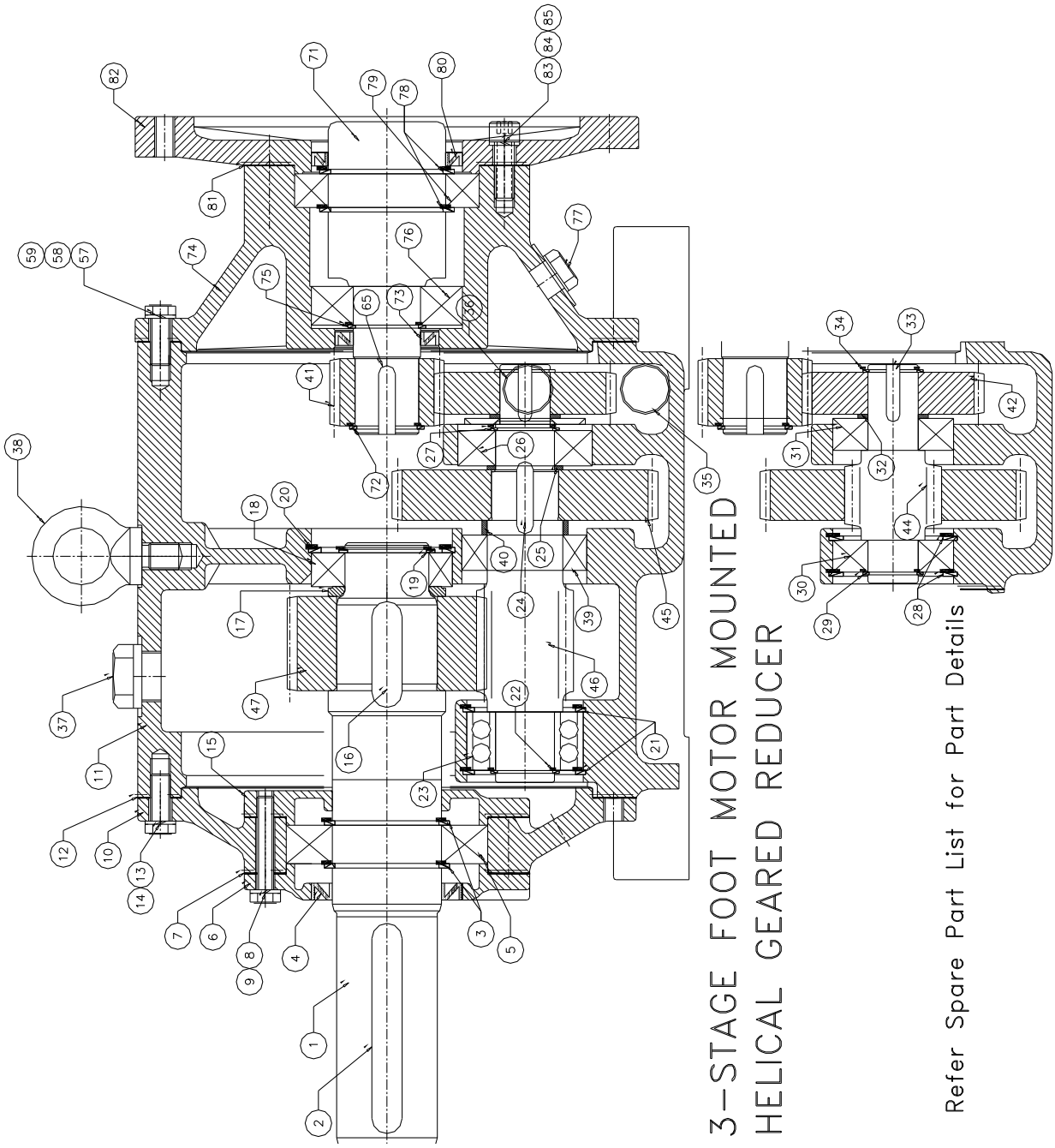
3-STAGE FOOT MOUNTED
HELICAL GEARED REDUCER
Refer Spare Part List for Part Details

SR. NO.	DESCRIPTION	SR. NO.	DESCRIPTION
1	OUTPUT SHAFT	49	SPRING WASHER
2	RECTANGULAR PARALLEL KEY	50	HEXAGONAL SOCKET HEAD CAP SCREW
3	EXTERNAL CIRCLIPS	51	ELECTRIC MOTOR
4	OIL SEAL (MI TYPE)	52	GASKET FOR ELECTRIC MOTOR
5	DEEP GROOVE BALL BEARING/TAPER ROLLER BEARING	53	DEEP GROOVE BALL BEARING/TAPER ROLLER BEARING
6	THRUST COVER WITH OIL SEAL (EXTERNAL)	54	CYLINDRICAL ROLLER BEARING
7	GASKET FOR THRUST COVER	55	INTERMEDIATE RING
8	HEXAGONAL SCREW	57	HEXAGONAL SCREW (LONG)
9	SPRING WASHER	58	HEXAGONAL SCREW (SHORT)
10	GEAR CASE COVER/AGITATOR FLANGE	59	SPRING WASHER
11	GEAR CASE	60	HEXAGONAL SOCKET HEAD CAP SCREW
12	GEAR CASE COVER GASKET (FRONT & REAR)	61	HEXAGONAL SOCKET HEAD CSK SCREW
13	HEXAGONAL SCREW	62	HEXAGONAL SCREW
14	SPRING WASHER	63	SPRING WASHER
15	THRUST COVER WITH & WITHOUT OIL SEAL	64	DISTANCE PIECE
16	RECTANGULAR PARALLEL KEY	65	RECTANGULAR PARALLEL KEY
17	SPACER	66	LOCK WASHER
18	CYLINDRICAL ROLLER BEARING	67	SPRING WASHER
19	EXTERNAL CIRCLIPS	68	HEXAGONAL SCREW
20	INTERNAL CIRCLIPS	69	HEXAGONAL SOCKET HEAD CAP SCREW
21	INTERNAL CIRCLIPS	70	HEXAGONAL SOCKET HEAD CSK SCREW
22	EXTERNAL CIRCLIPS	71	INPUT HOLLOW SHAFT
23	DOUBLE ROW ANGULAR CONTACT BALL BEARING	72	EXTERNAL CIRCLIPS FOR 1ST PINION
24	RECTANGULAR PARALLEL KEY	73	OIL SEAL (MI TYPE)
25	SPACER	74	INPUT COVER FOR HOLLOW INPUT
26	DEEP GROOVE BALL BEARING	75	EXTERNAL CIRCLIP FOR BEARING
27	EXTERNAL CIRCLIPS	76	DEEP GROOVE BALL BEARING
28	INTERNAL CIRCLIPS	77	GREASE NIPPLE
29	EXTERNAL CIRCLIPS	78	EXTERNAL CIRCLIP FOR BEARING
30	DEEP GROOVE BALL BEARING	79	DEEP GROOVE BALL BEARING
31	DEEP GROOVE BALL BEARING	80	OIL SEAL (MI TYPE)
32	SPACER	81	GASKET BETWEEN INPUT COVER & FLANGE
33	RECTANGULAR PARALLEL KEY	82	FLANGE
34	EXTERNAL CIRCLIPS	83	SPRING WASHER
35	DRAIN PLUG	84	HEXAGONAL BOLT
36	OIL LEVEL INDICATOR	85	HEXAGONAL SOCKET HEAD CAP SCREW
37	BREATHER PLUG	86	SOLID INPUT SHAFT
38	EYE BOLT	87	INPUT COVER FOR SOLID INPUT SHAFT
39	CYLINDRICAL ROLLER BEARING FOR 113/123	88	INSIDE THRUST COVER FOR INPUT SIDE
40	SPACER FOR 113/123	89	HEXAGONAL BOLT FOR INSIDE THRUST COVER
41	1ST PINION	90	SPRING WASHER
42	1ST WHEEL	91	GASKET FOR INPUT COVER & INSIDE THRUST COVER
43	2ND HELICAL PINION SHAFT (FOR 2 STAGE ONLY)	92	OUTSIDE THRUST COVER FOR INPUT SIDE
44	2ND HELICAL PINION SHAFT (FOR 3 STAGE ONLY)	93	HEXAGONAL BOLT FOR OUTSIDE THRUST COVER
45	2ND HELICAL WHEEL	94	SPRING WASHER
46	3RD HELICAL PINION SHAFT	96	INTERNAL CIRCLIPS
47	2ND/3RD HELICAL WHEEL	97	RECTANGULAR PARALLEL KEY
48	INTERNAL CIRCLIP		

OUR MANUFACTURING RANGE

Automatic Weighing and Bag Filling Machines
For net and gross weighing of chemicals, fertilizers, grain, etc.

Microprocessor based Electronic Belt Weighers
For continuous weighing of bulk products, blending, batching, etc.

Microprocessor based Electronic Weigh Feeders
For controlling rate of flow of various materials and for simultaneous proportioning for Cement, Chemicals, Fertilizers and Steel Industry.

Electronic Metal Detectors
For detection of metallic contamination in bulk products.

Industrial Magnets
Overband Magnetic Separators and Suspension Magnets.

Automatic Truck and Wagon Loaders
For automatic loading of filled bags of cement, urea, etc.
direct into trucks and wagons.

Helical Geared Motors/Gear Boxes/Inline Gear Boxes
from 0.16 HP to 125 HP

Heliworm Geared Motors/Gear Boxes/Gear Reducer
from 0.16 HP to 30 HP

Helibevel Geared Motors/Gear Boxes/Gear Reducer
from 0.5 HP to 30 HP

MANUAL

FOR

ELECON MAKE

WORM GEAR UNITS

WITH

CONTORQ UNIT

INSTALLATION, OPERATION & MAINTENANCE MANUAL FOR

6-NUR/CT-60B CONTORQ GEAR UNIT

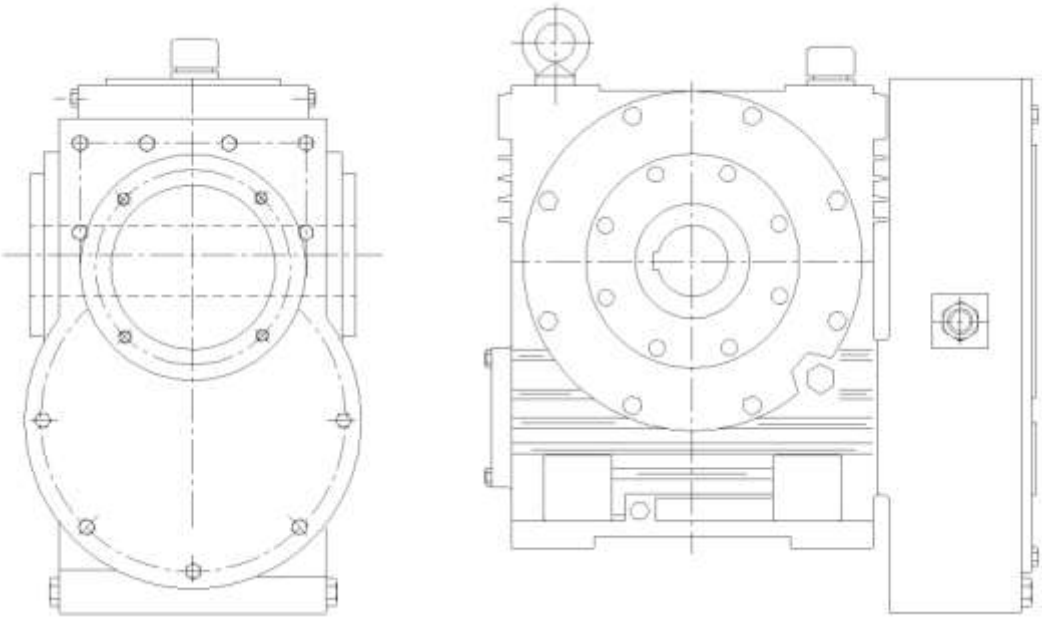

6-NUP/CT-60B CONTORQ GEAR UNIT

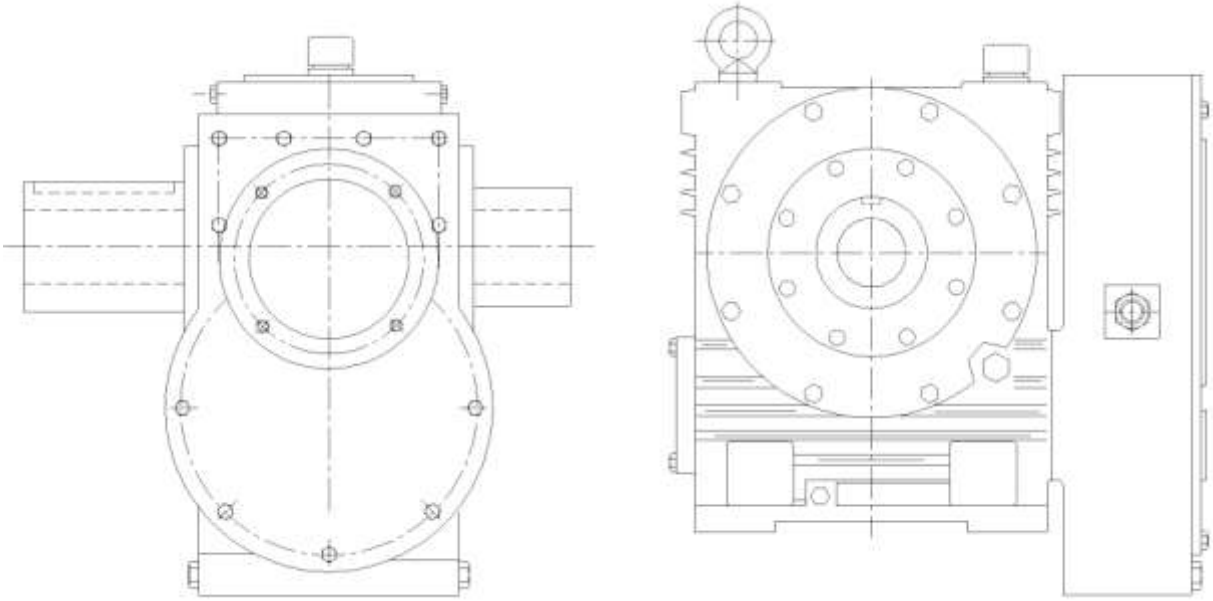

INDEX

1. INTRODUCTION.....3

2. TRANSPORTATION..... 3

3. STORAGE.....3

4. INSTALLATION.....3
/HANDLING
/FOUNDATION

5. LUBRICATION.....4
/IMPORTANCE OF LUBRICATION
/RECOMMANDED LUDRICANTS

6. MAINTENANCE.....6
/PROBLEM, CAUSE & REMEDY
/TORQUE ADJUSTMENT

7. SPARES.....8
/GENERAL ARRANGEMENT- 6NUR/CT-60B CONTORQ GEAR /SPARE PART LIST- 6NUR/CT-60B CONTORQ GEAR /GENERAL ARRANGEMENT- 6NUP/CT-60B CONTORQ GEAR /SPARE PART LIST- 6NUP/CT-60B CONTORQ GEAR

1. INTRODUCTION

The proper working of the gear box unit depends on the careful installation, correct grade of lubricants and good working conditions. Hence it is most important to see that the installation of the gear box is done according to instructions given in this manual to ensure proper working as well as long & trouble free operation.

2. TRANSPORTATION

1.All the gear units are packed in wooden cases or cages.

2.The gear unit must be unloaded from the lorry with equipment appropriate to its weight and size.

3.Check the condition of the unit on delivery. If the gear unit is at all damaged, do not install it without prior authorization.

3. STORAGE

1.Store the gear unit, even if still in its original packing, in a dry place protected from the weather.
2.If the gear unit has already been unpacked, it must also be protected from dust.

4. INSTALLATION

Handling

1. gear unit is supplied in completely assembled condition without oil. The shaft ends are coated with anti corrosive agent which are to be removed only by suitable solvent. In no case, shaft should be scraped on field.
2. The gear unit should be lifted by making the use of the eyebolt or integrally cast lugs. These are designed for the weight of the gear unit only and no accessories should be lifted alongthwith gear unit.
3.The gear unit can be lifted with belts or chains, but care must be taken to avoid loading certain critical parts.

/Foundation

1.Correct installation of gear box is essential to achieve good performance. The gear box must be rigidly connected to the foundation and also the foundation should be enough rigid and having flat mounting surfaces.
2.Place the gear unit on its base and make sure that it is resting on all the contact points, including those of the external support if present, which correspond to the fixing holes. If certain points are not in contact, build up the base thickness with appropriate materials until the above condition is fulfilled.
3.Fix the gear unit to the base, tightening the bolts in diagonal order.
4.Quiet running and long service life of the gear unit largly depend upon correct installation
5.The foundation must have sufficient load carrying capacity.

5. LUBRICATION

/Importance of Lubrication

Lubrication is very important factor for trouble free working of gear box. The gear unit is supplied in completely assembled condition without oil and must be filled with the correct grade of lubrication to correct level. Reliability, efficiency and wear free operation mainly depend on lubricatant used. Over filling of lubricant results in overheating and leakage.

Following points should be kept in mind while lubricating the gear box.

1. Oil of two different manufacturers should not be mixed in any case even though they may be of equivalent grade.
2. Cleanliness of oil is of prime importance and it is imperative to flush the gear unit with flushing oil before refilling. Fluid is to be drained off completely before filling the fresh oil.
3. Routine oil level check is very much necessary and oil should not fall below the level.
4. Refilling instruction: First of all stop the gear unit & pour the oil in through the hole until the center-line of the knob type oil level indicator is reached.
5. Emptying instruction: Stop the gear unit, unscrew the Drain plug at its base and wait for all the oil to drain.
6. It is essential to ensure that the breather plughole is kept clear at all times. This may lead to oil leakage and inhalation of foreign matter through the oil seal, which would cause the gear unit to ventilate freely.

Recommanded Lubricants – For Contorq Unit

Synthetic Oil

Indian Oil	Servomesh Sp – 320 or Equi.

SPECIAL NOTE:

Lubricants of two different brands should never be mixed. The gear unit must be flushed while changing Lubricant.

First change oil should be made after 250 hours of operation.

Subsequent oil change must be made after every 3000 hours of operation. The interval should not exceed 12 months.

6.MAINTENANCE

Problem, Cause & its Remedy

Problem	Cause	Remedy
(1) Gear box is over heated	Over Load Lubricant is more or Less Incorrect grade of Lubricant Oil seal damaged	Check the actual loading Fill oil to specified level. Use oil of correct grade Replace the oil seal
(2) Gear box buzzes	Gear Damaged Bearing Damaged Inadequate Lubricant Foreign matter entries in Gear box	Correct Gears Replace the bearing Supply more oil Remove and change the Oil
(3) Unusual Vibration	Foreign matter Bearing damaged / Worn out Bolts Loosened	Remove and Change the oil Replace the Bearing Tighten the bolts
(4) Leakage of Oil	Oil seal damaged Packing damaged Drain plug loosened	Replace Replace Tighten the drain plug
(5) I/p and O/p Shaft do not work	Bearing damaged A solid foreign matter in gearing	Replace Remove and clean the inside & fill the fresh Lubricants

Note: - The information given here is for user guidance. It will enable them to obtain satisfactory performance of the gearbox. However, in case of doubt, the users are advised not to make any guess work or take risk but to consult Elecon.

TORQUE ADJUSTMENT:

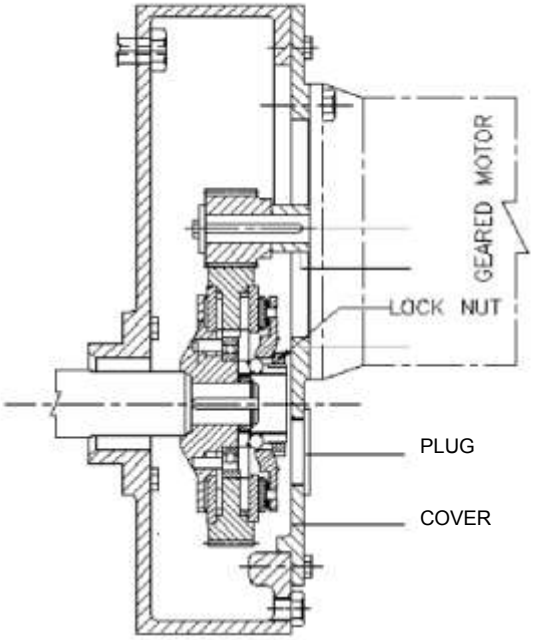

CONTORQ UNIT

As shown in fig, the adjustment of torque can be done by removing the plug / geared motor and then tightening or loosening the lock nut provided at the end of worm shaft in contorq unit. The tightening of lock nut will be result to increase the torque transmitting capacity and vice versa.

SAFETY PRECAUTION:

THE CLIENT SHOULD PROTECT THE ROTATING PARTS LIKE COUPLING, ROTATING SHAFT EXTENSION ETC. WITH SAFETY GUARD.

7. SPARES:

(1) 6-NUR/CT-60B CONTORQ GEAR UNIT:

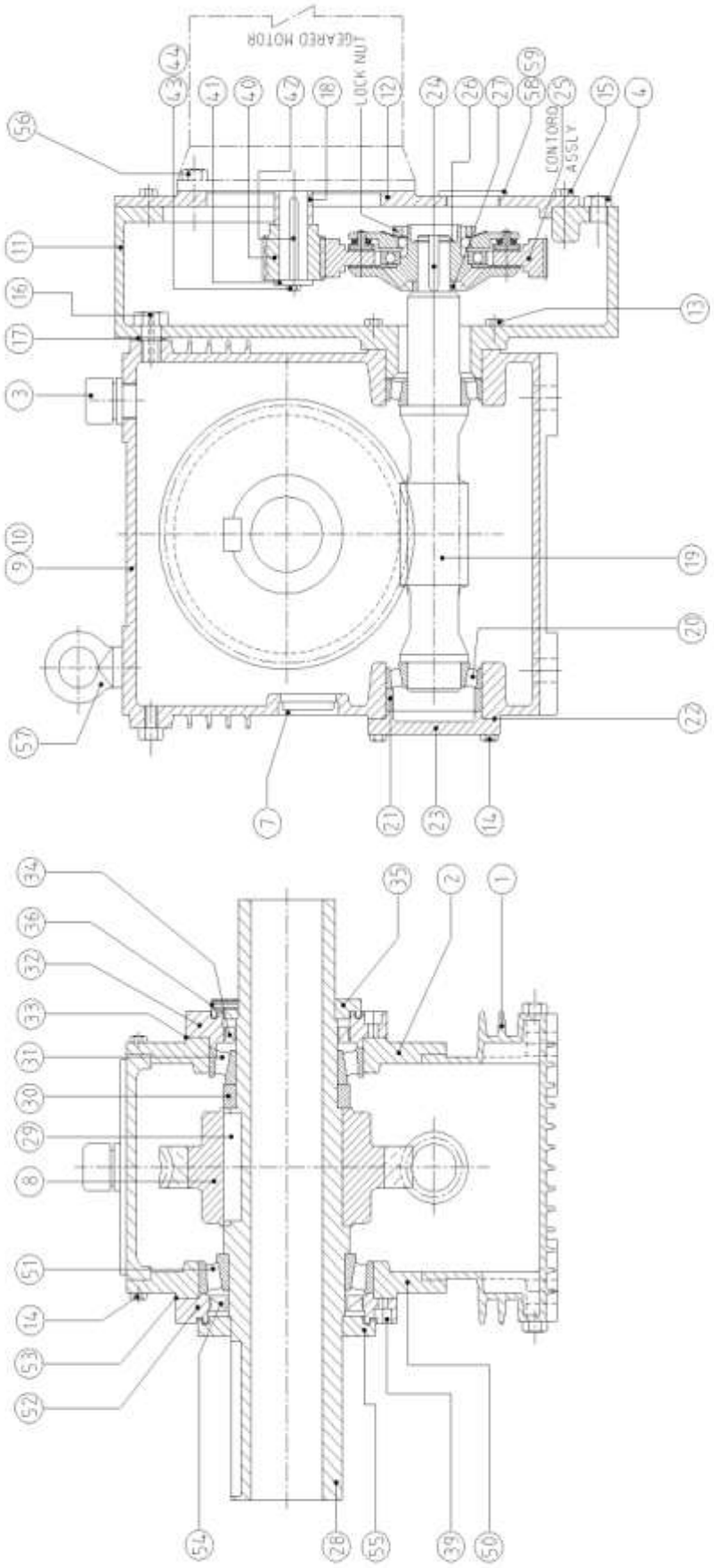

Part List for 6-NUR/CT-60B CONTORQ GEAR UNIT:

Part No.	Description	Qty.	Part No.	Description	Qty
1	Gear Case	1	29	Parallel Key	1
2	Bearing Housing	1	30	Distance Piece	1
3	Breather Plug	1	31	Taper Roller Bearing	1
4	Drain Plug	6	32	Cover	1
5	Oil Level Indicator	1	33	Shims	1 Set
7	Oil Seal Cap	1	34	Oil Seal	1
8	Worm Wheel	1	35	Labyrinth Cover	1
9	Name Plate	1	36	Hex. Socket Grub Screw	4
10	Al. Round Head Rivet	4	39	Hex. Socket Head Screw	16
11	1st Stage Gear Case	1	40	Pinion	1
12	Cover	1	41	Pressure Plate	1
13	Hex Head Screw	4	42	Parallel Key	1
14	Hex Head Screw	20	43	Hex. Head Screw	1
15	Hex Head Screw	14	44	Spring Washer	1
16	Hex Head Screw	1	48	Socket Pipe Plug	1
17	Distance Piece	1	49	Washer	1
18	Distance Piece	1	50	Bearing Housing	1
19	Worm Shaft	1	51	Taper Roller Bearing	1
20	Taper Roller Bearing	2	52	Cover	1
21	Distance Ring	1	53	Shims	1 Set
22	Shims	1 Set	54	Oil Seals	1
23	Protection Cover	1	55	Labyrinth Cover	1
24	Parallel Key	1	56	Hex. Head Screw	4
25	Contorq CT60 BHT/BST assy.	1	57	Eye Bolt	2
26	External Circlip	1	58	Plug	1
27	Distance Piece	1	59	Copper Washer	1
28	Hollow S.S.Shaft	1			

(2) 6-NUP/CT-60B CONTORQ GEAR UNIT:

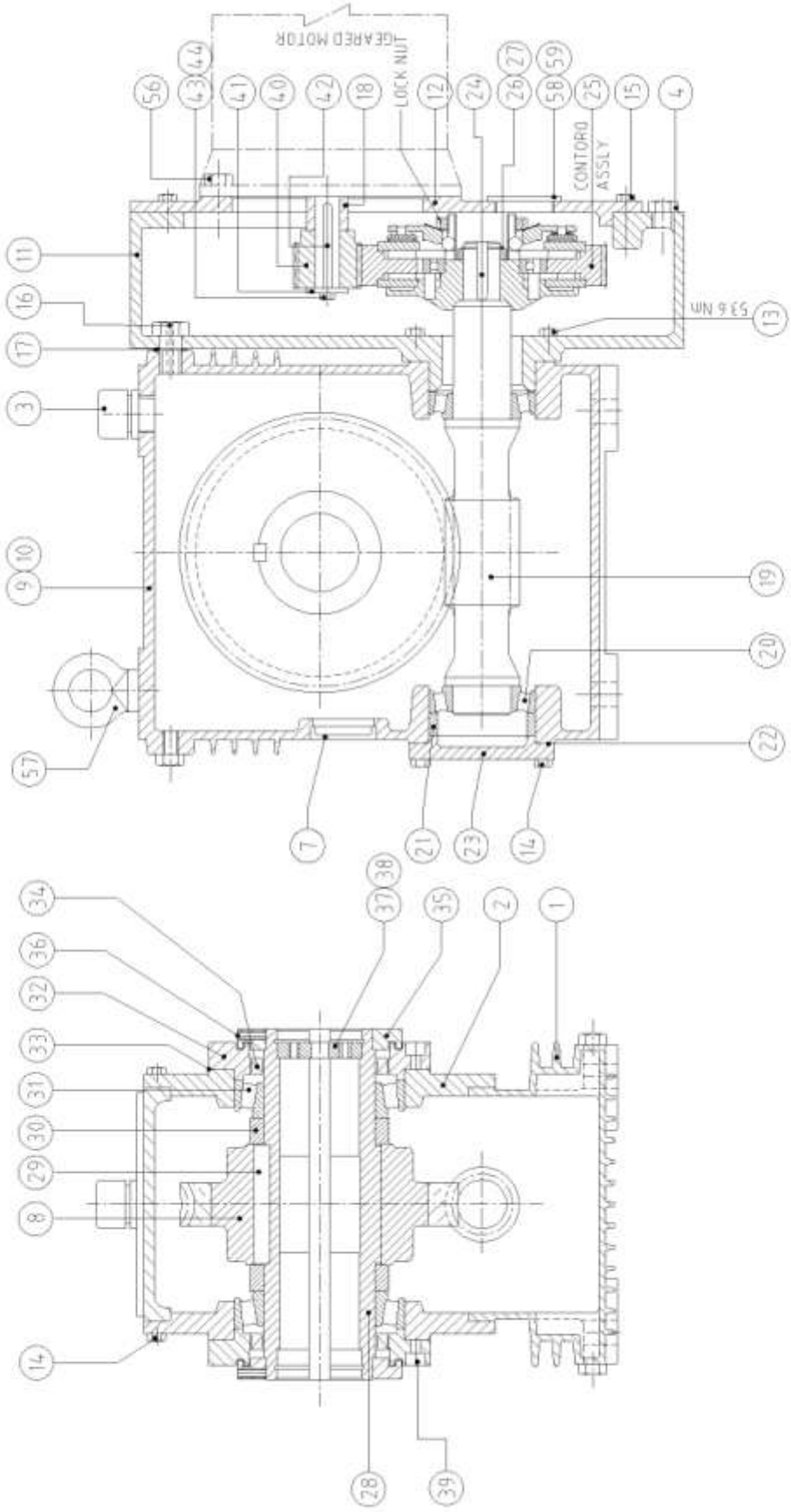

Part List for 6-NUP/CT-60B CONTORQ GEAR UNIT:

Part No.	Description	Qty .	Part No.	Description	Qty
1	Gear Case	1	29	Parallel Key	1
2	Bearing Housing	2	30	Distance Piece	2
3	Breather Plug	1	31	Taper Roller Bearing	2
4	Drain Plug	6	32	Cover	2
5	Oil Level Indicator	1	33	Shims	2 Set
7	Oil Seal Cap	1	34	Oil Seal	2
8	Worm Wheel	1	35	Labyrinth Cover	2
9	Name Plate	1	36	Hex. Socket Grub Screw	4
10	Al. Round Head Rivet	4	37	Pressure Plate	1
11	1st Stage Gear Case	1	38	Internal Circlip	1
12	Cover	1	39	Hex. Socket Head Screw	16
13	Hex Head Screw	4	40	Pinion	1
14	Hex Head Screw	20	41	Pressure Plate	1
15	Hex Head Screw	14	42	Parallel Key	1
16	Hex Head Screw	1	43	Hex. Head Screw	1
17	Distance Piece	1	44	Spring Washer	1
18	Distance Piece	1	48	Socket Pipe Plug	1
19	Worm Shaft	1	49	Washer	1
20	Taper Roller Bearing	2	56	Hex. Head Screw	4
21	Distance Ring	1	57	Eye Bolt	2
22	Shims	1 Set	58	Plug	1
23	Protection Cover	1	59	Copper Washer	1
24	Parallel Key	1			
25	Contorq CT60 BHT/BST assy.	1			
26	External Circlip	1			
27	Distance Piece	1			
28	Hollow S.S.Shaft	1			

SECTION - 8

8.1 COMMISSINING INSTRUCTIONS

1. In order to complete commissioning, the Engineer must have complete access of the machine.
2. Ensure that installations and electrical connections are o.k.
3. Confirm that machine is ready for operation.
4. Confirm the feed point connections are securely clamped.
5. Ensure that CRD motor shall be turned off during unwinding.
6. Check the operation of all limit switches.
7. Manually operate the motor to ensure correct recovery direction.
8. Travel the Machine towards the centre feed point and Check rotation of cam of geared rotary switch.
9. Position the machine about 1.0 mtr from centre point each side and set the GRLS switch.
10. Travel the machine towards the centre point and ensure that Under-tension switch does not trip.
11. During recovery of the cable on drum, the cable slightly touches all the rollers of the cable guide and occasionally moving off the roller, when machine is away from the centre point.
12. Check the operational of CRD for operational and idle machine travel speed and ensure that CRD recovers the cable without undue slack. The winding and unwinding of cable without over and under-tension.
13. Check that the layering of the cable on drum is proper. It means the speed of layering mechanism is in line drum speed.
14. Perform the AMP test on CRD motor and confirm that current consumption is within the limit.
15. Visually check that the components are operating correctly and proper tensions on all chains.

8.2 INSTRUCTIONS TO OVERCOME THIS FAILURE OF RECOVERY OF CABLE.

TO ADJUST CONTORQ:

A. Restrain the reel periphery with rope**.**

B. Remove the flange mounted geared motor from worm gear box with Contorq unit.

C. Drain the oil from Gear box.

D. Castellated nut can be visible through motor mounting hole.

E. By utilizing the soft non-ferrous punch and hammer, turned the slotted nut to clockwise to increase the torque or anti-clockwise to decrease the torque.

F. Adjust the slotted nut in increase of 10 mm. At the castellated nut to increase or decrease the torque.

G. Refit motor.

H. Refill the oil in the Gear box.

I. Release Reel periphery. If restrained.

J. Operate Reel and check the performance.

8.3 CABLE TENSIONS:

Observe the behavior of the cable at the roller guide. When the torque adjustment of the contorq is correct.

Followings may be noted:

Reeling in (recovery cycle):

- Cable slightly touches all the rollers and occasionally moving off the last roller, when drum is nearly full of cable.

Payout (un-winding operation):

- When reel is moving away from the feed point, ensure that the CRD motor should be switched off. The cable is being physically pulled off from the reel and touches the bottom roller of the guide way.
- Ensure that the cable should not be over tensioned.
- Travel machine for its full travel length and check the operation of CRD.

8.4 Other checks:

- Perform the amp test for CRD motor and confirm the current consumption is within motor ratings.
- Check that the all the CRD components are working well and maintain the chain tensions.
- Ensure that all the covers and guards are properly fitted.
- Individually check the performance of the each reel, when power and control CRD are separate.

SECTION – 9

FAULT FINDINGS

SR NO.	FAULT	SR NO.	POSSIBLE CAUSE	SR NO.	REMEDY
1	CRD Motor fails to start	1. 2. 3. 4.	Blown fuse Circuit breaker has tripped No power Over/under tension switch tripped	1 2 3 4	Check and replace, if necessary. Reset. Check the power supply Check and reset the switch. Find the reasons for fault.
2	Motor starts but drive fails to recover cable.	1 2 3	Brake fails to release. Contorq unit is not adjusted properly. Cable snagged	1 2 3	Check & adjust Check & adjust Check the cable path through roller guide. Ensure all rollers are running freely.
3	Reeler stops	1 2 3	Over/ Under tension circuit tripped. Fuse blown Circuit breaker tripped.	1 2 3.	Check & reset the cable tom permit m/c to proceed. Replace Check & replace if necessary.
	At center feed point Under tension switch ripped.	4 5	GRLS switch not set correctly. Incorrect operation of directional sensor switch	4 5	Check and reset as per commissioning instructions. Check the switch arm and circuit
4	Reeler over tension switch trips often.	1	Broken tension springs/deformed springs	1	Check and replace if necessary.
5	Cable loops under roller guide.	1	Under tension switch fails to operate.	1	Check the spring rod of switch. Check circuit.
6	Failure of reel to recover the cable	1	Torque required to recover the cable is less	1	To increase the torque of contorq.

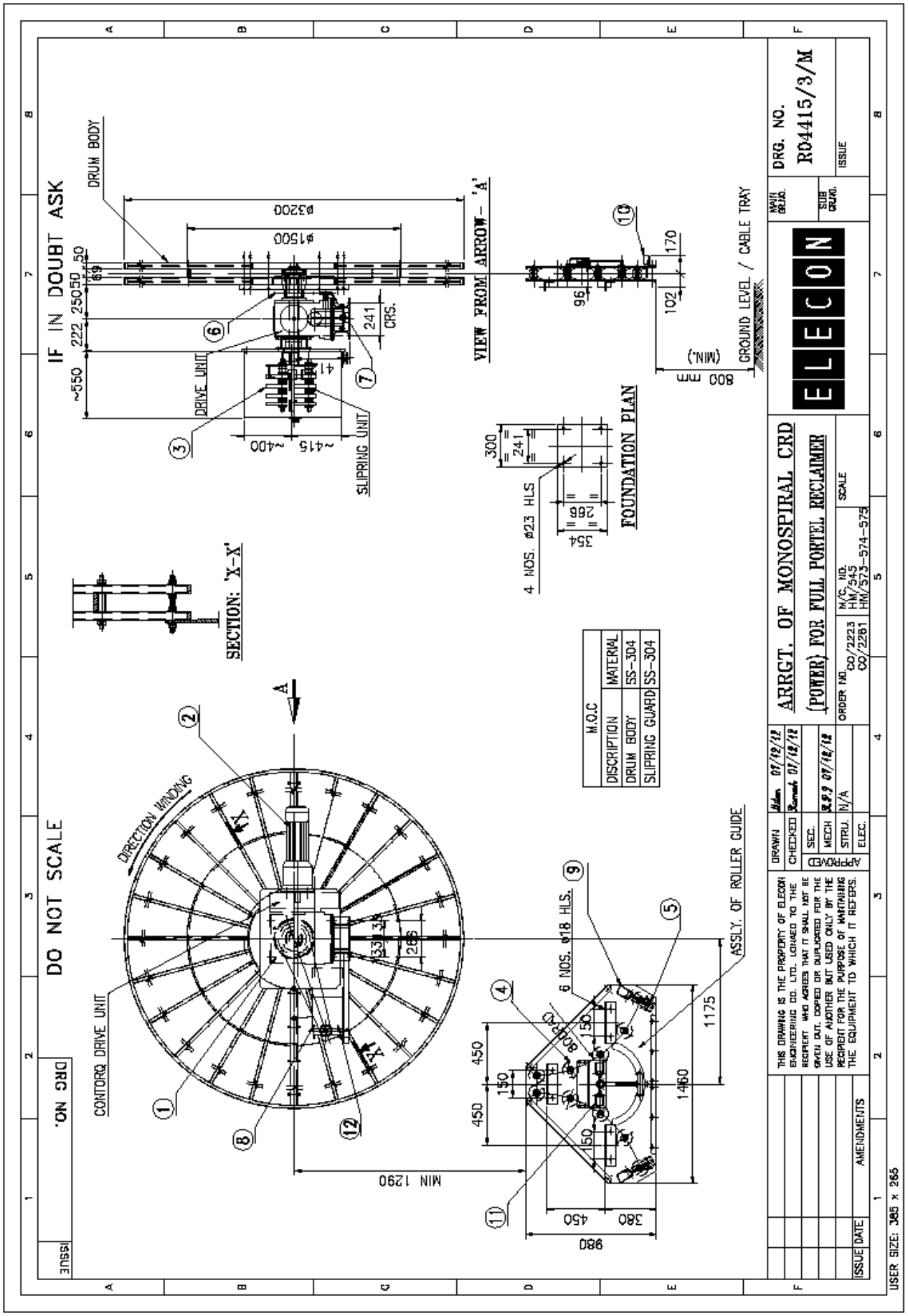
DO NOT SCALE
IF IN DOUBT ASK
DRG NO.
ISSUE
DRUM BODY
ø3200
ø1500
VIEW FROM ARROW - 'A'
DRIVE UNIT
SLIPRING UNIT
CRS.
GROUND LEVEL / CABLE TRAY
800 mm (MIN.)
FOUNDATION PLAN
4 NOS. ø23 HLS
SECTION: 'X-X'
DIRECTION WINDING
CONTORQ DRIVE UNIT
MIN 1290
6 NOS. ø18 HLS.
ASSLY. OF ROLLER GUIDE
M.O.C
DISCRIPTION
MATERIAL
DRUM BODY
SS-304
SLIPRING GUARD
SS-304
DRG. NO.
R04415/3/M
ARRGT. OF MONOSPIRAL CRD
(POWER) FOR FULL PORTEL RECLAIMER
ORDER NO.
CO/2223
CO/2261
M/C. NO.
HM/545
HM/573-574-575
SCALE
DRAWN
CHECKED
SEC.
MECH
STRU.
ELEC.
APPROVED
THIS DRAWING IS THE PROPERTY OF ELECON ENGINEERING CO. LTD. LOANED TO THE RECIPIENT WHO AGREES THAT IT SHALL NOT BE GIVEN OUT, COPIED OR DUPLICATED FOR THE USE OF ANOTHER BUT USED ONLY BY THE RECIPIENT FOR THE PURPOSE OF MAINTAINING THE EQUIPMENT TO WHICH IT REFERS.
ISSUE DATE
AMENDMENTS
USER SIZE: 385 x 265

SECTION - 10

SPARE PARTS FOR CABLE REELING DRUM.

1) POWER CRD – G.A DRG NO. R04415/3/M (FULL PORTEL SCRAPER RECLAIMER)

SR NO	ITEM	QTY	DRG NO.	MAKE	REMARK
1	6" NUR WORM GEAR BOX CONTORQ UNIT CT 60 BHT DRIVE TORQUE SETTING – 480 NM	1	60-60-019	ELECON	
2	FLANGE MOUNTED GEARED MOTOR WITH BRAKE SIZE : 0.75 KW x 150 RPM FRAME SIZE : 42.1P-D80L4	1	R03577/3 SR.25	PBL	
3	SLIPRING ASSLY	1	SI/IFFCO/ELECON/02	SUPREME INDU.	
4	ROLLER ASSLY R-800	10	R00673/3	ELECON	
5	TENSION SPRING FOR O/T SWITCH	4	R00656/4 SR –04	ELECON	
6	SPROCKET ON DRUM FOR GRLS SWITCH Z = 40, t = 3/4"	1	R02390/4		
7	SPROCKET ON GRLS SWITCH Z = 40, P = 3/4"	1	R01643/3 SR –02		
8	SINGLE STRAND ROLLER CHAIN FOR GRLS SWITCH. PITCH – 3/4" ROLKOBO-0139-0 TYPE – NO.KOBO-0139-0	120 LINK	R02959/3	ROLCON	
9	OVER TENSION SWITCH TYPE - 45-63	2 NOS		JAI BALAJI	
10	UNDER TENSION SWITCH TYPE - ZCK –J1 + ZCK E08	1		TELEMECHANIQUE	
11	DIRCTIONAL SENSOR SWITCH TYPE – 45-63	2 NOS		JAI BALAJI	
12	GEARED ROTARY SWITCH TYPE RATIO - 48:1	1		ELEKTROMAG	

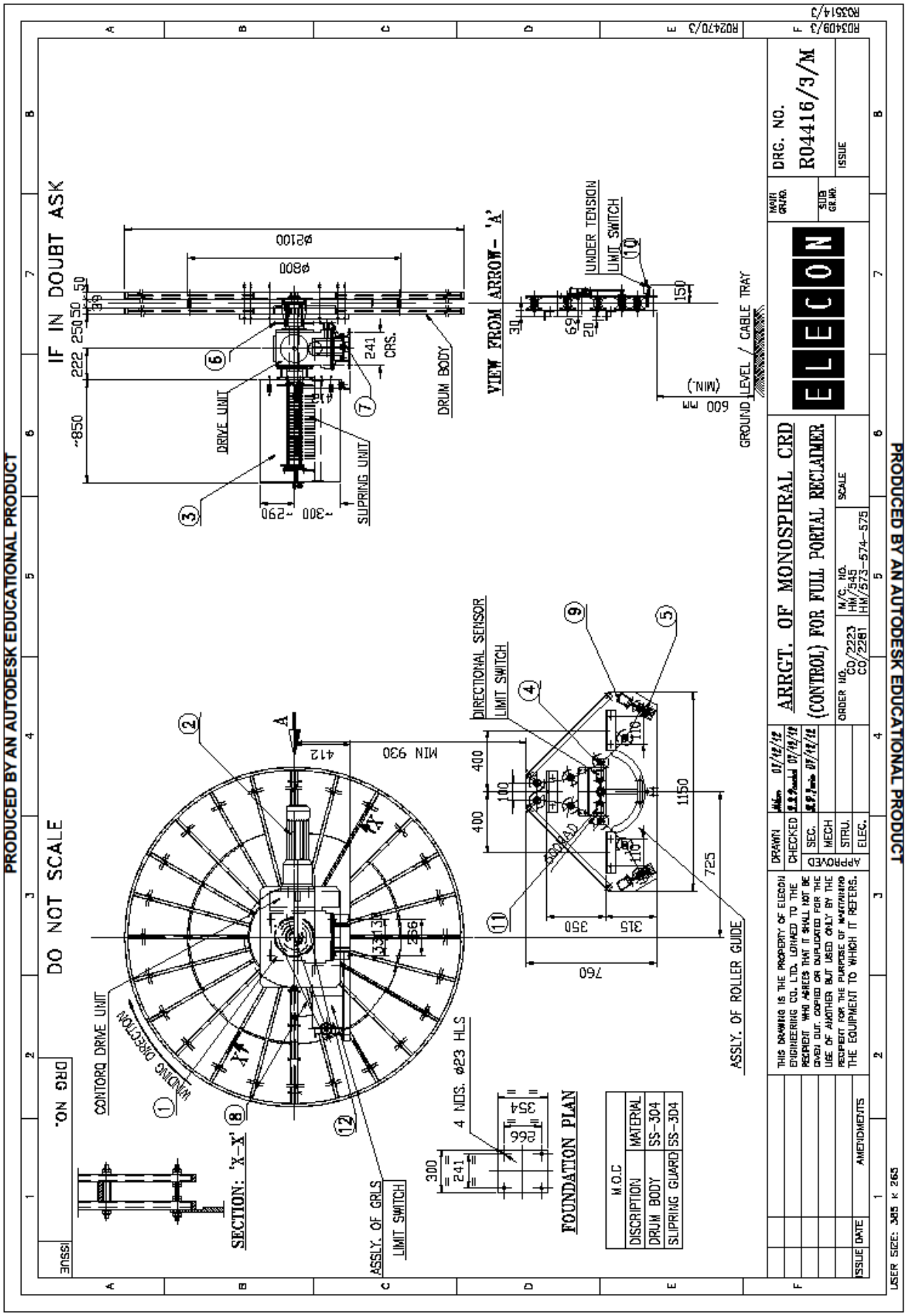
PRODUCED BY AN AUTODESK EDUCATIONAL PRODUCT
DO NOT SCALE
IF IN DOUBT ASK
VIEW FROM ARROW- 'A'
SECTION: 'X-X'
FOUNDATION PLAN
CONTORQ DRIVE UNIT
WINDING DIRECTION
DRIVE UNIT
SLIPRING UNIT
DRUM BODY
UNDER TENSION LIMIT SWITCH
GROUND LEVEL / CABLE TRAY
DIRECTIONAL SENSOR LIMIT SWITCH
ASSLY. OF GRLS LIMIT SWITCH
ASSLY. OF ROLLER GUIDE
4 NOS. ø23 HLS
M.O.C
DISCRIPTION MATERIAL
DRUM BODY SS-304
SLIPRING GUARD SS-304
ARRGT. OF MONOSPIRAL CRD
(CONTROL) FOR FULL PORTAL RECLAIMER
DRG. NO.
R04416/3/M
ELECON
THIS DRAWING IS THE PROPERTY OF ELECON ENGINEERING CO. LTD. LOANED TO THE RECIPIENT WHO AGREES THAT IT SHALL NOT BE GIVEN OUT, COPIED OR DUPLICATED FOR THE USE OF ANOTHER BUT USED ONLY BY THE RECIPIENT FOR THE PURPOSE OF MAINTAINING THE EQUIPMENT TO WHICH IT REFERS.
USER SIZE: 385 x 265

SECTION - 10

SPARE PARTS FOR CABLE REELING DRUM.

1) CONTROL CRD – G.A DRG NO. R04416/3/M (FULL PORTEL SCRAPER RECLAIMER)

SR NO	ITEM	QTY	DRG NO.	MAKE	REMARK
1	6" NUR WORM GEAR BOX CONTORQ UNIT CT 60 BHT DRIVE TORQUE SETTING – 170 NM	1	60-60-019	ELECON	
2	FLANGE MOUNTED GEARED MOTOR WITH BRAKE SIZE : 0.75 KW x 150 RPM FRAME SIZE : 42.1P-D80L4	1	R03577/3 SR.26	PBL	
3	SLIPRING ASSLY	1	SI/IFFCO/ELECON/05	SUPREME INDU.	
4	ROLLER ASSLY R-600	10	R00686/3	ELECON	
5	TENSION SPRING FOR O/T SWITCH	4	R00656/4 SR –02	ELECON	
6	SPROCKET ON DRUM FOR GRLS SWITCH Z = 40, t = 3/4"	1	R02390/4		
7	SPROCKET ON GRLS SWITCH Z = 40, P = 3/4"	1	R01643/3 SR –02		
8	SINGLE STRAND ROLLER CHAIN FOR GRLS SWITCH. PITCH – 3/4" ROLKOBO-0139-0 TYPE – NO.KOBO-0139-0	120 LINK	R02959/3	ROLCON	
9	OVER TENSION SWITCH TYPE - 45-63	2 NOS		JAI BALAJI	
10	UNDER TENSION SWITCH TYPE - ZCK –J1 + ZCK E08	1		TELEMECHANIQUE	
11	DIRCTIONAL SENSOR SWITCH TYPE – 45-63	2 NOS		JAI BALAJI	
12	GEARED ROTARY SWITCH TYPE RATIO - 48:1	1		ELEKTROMAG	

ELECON EPC PROJECTS LIMITED

DE LUMPER

DELUMPER

INSTALLATION,OPERATION, MAINTENANCE & SPARE PARTS MANUAL

CLIENT:

M/S IFFCO PARADEEP

CO:2223/CO2281

M/C NO: HM/545/573-575

MANUFACTURER:

ELECON EPC PROJECTS LIMITED

V.V. NAGAR-ANAND

GUJARAT-INDIA

Thank you for purchasing ELECON Delumper & being one of our valuable customers.

It has been developed with advanced Technology and past more than 50 years of experience in the Material Handling Field.

Every effort was expended to make sure that the information and instructions in this manual are both accurate & current at the time when manual was written. However manufacturer reserves the right to change, alter or otherwise improve this product at any time without prior notice.

Exemption from Liabilities:

The company ELECON is not liable for damage occurring because of misuse, inappropriate maintenance & repair or under terminated application. ELECON Delumper is designed to crush material as mentioned in approved General Arrangement drawing. It is prohibited to use other material and if so ELECON may not be responsible for any damages or accidents.

CONTENTS

1. GENERAL INSTRUCTIONS 5
2. INTRODUCTION TO EQUIPMENT 6
2.1 INTRODUCTION 6
2.2 STRUCTURAL COMPONENTS. 6
2.2.1 HOUSING 6
2.3 ROTOR 6
2.4 DRIVE. 7
The drive arrangement consists of electric motor, coupling ,v-belt. 7
3. STORAGE PROCEDURE 7
3.1 Basic Equipment Unit. 7
3.2 STORAGE PROCEDURES FOR EXTREME CLIMATES 8
4. ERECTION 10
4.1 Special Recommendations for Erection 10
4.2 Erection Supervision 10
4.3 Assembly Instructions 11
4.4 RECOMMENDED TIGHTENING TORQUE FOR FASTENRES 12
5 COMMISIONING 13
5.1 Electrical Interlocking 14
5.2 Cold Run 14
5.3 Warm Run 14
5.4 Correction Mechanical Cold & Warm Run. 14
5.5 Acceptance: 15
5.6 Training 15
6 MAINTENANCE 16
6.1 WEARING PLATES OF HOUSING 16
6.2 INTERVAL OF INSPECTION OF CRITICAL PARTS 16
6.3 POSSIBLE TROUBLES & THEIR REMEDIEs 17
6.4 LUBRIACTION INSTRUCTIONS AND MAINTENACE OF BEARINGS 18
6.4.1 RE-LUBRICATION PLAN 18
7 SPARE PARTS LIST 19

ATTACHMENTS

- GENERAL ARRANGEMENT DRAWING
- INSTALLATION OF MAINTENANCE OF V-BELT
- BEARING MOUNTING -DISMOUNTING & RELUBRICATION GUIDE (SKF)

DELUMPER

ORDER NO. : CO/ 2223/CO/2281
M/C NO. : HM/545/ HM573-575
CLIENT : M/S IFFCO LIMITED

G.A. DRG. NO. :- M17138/1

TECHNICAL SPECIFICATION:-

MATERIAL	:	NPK/DAP
CAPACITY	:	50 TPH (RATED) 60 TPH DESIGN
FEED SIZE	:	2.5 to 175 MM
PRODUCT SIZE	:	-6 MM
BULK DENSITY	:	0.96 T/M3
MOISTURE CONTENT	:	6% MAX. BY WEIGHT
BELT WIDTH	:	1400 MM
TOUGHNING ANGLE	:	35 DEGREE
ROTOR RPM	:	750

MATERIAL OF CONSTRUCTION:-

ROTOR SHAFT	:	EN-9/CK-60 FORGE
ROTOR DIAMETER	:	400 MM
ROTOR BLADE	:	C-45
BEARING SIZE	:	22218 EK

DRIVE DETAIL:-

MOTOR	:	22 KW X 1000 RPM SQ.CAGE MOTOR
ROTOR PULLEY	:	400 PCD
DRIVE PULLEY	:	315 PCD

ZERO SPEED LIMIT SWITCH

1. GENERAL INSTRUCTIONS

- Elecon will guarantee the contractual performance for the machines, parts as well as the relevant accessories supplied by Elecon only if, users would strictly follow the operating instruction and observance of machines. The assistance of an Elecon chief Erector for the machine erection and commissioning and use of original spare parts are absolutely essential for smooth operation of machines.

- We strongly emphasize the necessity to observe the safety regulations and expect to check thoroughly the operation of the machine regularly.
  Prevention of an accident is better than any cure, and to assist you in this regard carefully study the instruction manual and pay particular attention to all descriptions of

  ⚠ "**CAUTION**"," **WARNING**", "**DANGER**" and "**IMPORTANT**".

- The operator of plant requested to keep away unauthorized or untrained personnel from the operating area of the machine.

- Transport of the machines and machine parts must be done with proper care and under close supervision and use suitable ropes, tows, hoists, lifting gears, etc. during lifting individual parts. On receipt of goods prior to storage/ erection of the machine, checks the completion of the scope of delivery of parts as well as the condition of each component.

- If the machine/(s) or machine parts prior stored for a longer time for any reason prior to erection then preserve them properly and preservation done on machining & male and female parts must be removed during erection.

- The machine/(s) have to be stored in such a way that no visual or functional harm may occur during this storage period. Keep away any harmful substance like water, heat, dust, chemicals etc.

- Replacement parts, whatever it may be, must be of identical size, type and original ELECON made.

- Parts must be clean and free of dirt and burrs prior to installation. Lubricate parts where applicable.

2. INTRODUCTION TO EQUIPMENT

2.1 INTRODUCTION

ELECON make lump crusher, crush the large lump into small piece through blade.

Crusher drive with v-belt pulley ,coupling and electric motor.
Delumper would comprise of MS fabricated housing with liner.
It is compact and robust in construction. it has fully enclosed, dust tight body with large throat opening and discharge.

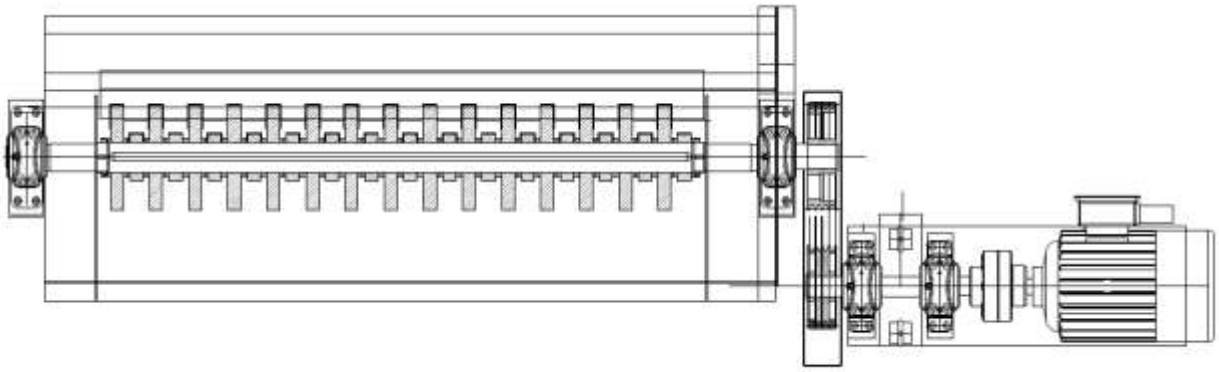

2.2 STRUCTURAL COMPONENTS.

2.2.1 HOUSING

The housing is made up of strong welded construction. The inner parts which are subject to wear, are protected by replaceable liner plates.
.

2.3 ROTOR

Each rotor consists forged shaft, with blades in steel construction. The steel spacer are provided to keep blades apart at distance.

Rotor blade with spacer are key fitted with rotor shaft. Rotor will run in bearing which is fitted in housing.

2.4 DRIVE.

The drive arrangement consists of electric motor, coupling ,v-belt.

3. STORAGE PROCEDURE

NOTE: Outdoor storage is NOT recommended for any electrical control components, electrical devices, electric motors, gear reduction units with mounted electric motors, or any other type of electrical equipments.

3.1 BASIC EQUIPMENT UNIT.

Outdoor storage is permissible with the following corrosion protection procedures. Equipment should be elevated a minimum of 6 inches above the ground.The equipment will not require any attention in storage for a period of 60 days. For longer periods exceeding 60 days, the shaft mounted reducers attached to the equipment must be completely filled with oil to prevent internal condensation and corrosion. The oil level gauge must be removed (due to gauge vent), and gauge port plugged. Before operating, drain oil, replace gauge, and re-lubricate with the recommended oil listed in the parts and maintenance manuals furnished with the equipment.

Non-painted external surfaces (drive shafts) must be checked for adequate coating of rust preventive material such as Exxon rust ban 373 (5).

Equipment with grease lubricated bearings should have the bearing housing cavities filled completely with grease. Equipment which has bearings which can be rotated completely every 60 days, at least 3 complete revolutions.

Reducers or gear boxes which cannot be filled completely with oil must be protected by spraying the inside of the box completely covering all surfaces with vapor rust inhibitor such as motor store VCI-10 (6).
Related equipment drive components, chain drives, and/or other mechanical and electrical accessory equipment.

Indoor storage is recommended in a clean, dry location with as near a constant temperature as possible to prevent condensation..

- **Mechanical components, gear reducers, drive components, etc.**

  - Coat all exposed machine parts, such as shaft extensions, etc. with Exxon rust ban 373 (5) or similar material if not already protected.
  - If unit has an electric motor attached, the electric motor should be rotated slowly by hand at least once very 60 days. This will distribute the grease in the bearings. At termination of storage, the motor should be meggered prior to applying power. The minimum readings should be one mega ohm for motors rated 600 volts and less.

  - All gear reducers stored for a period of exceeding 12 months indoors must be serviced with the storage procedures in the enclosed falk service manual 128-014 pages 1 & 2. These are good procedures to follow if not exist from other reducer manufacturers.

- **Electrical components.**

  - All electrical components must be protected from moisture and condensation. If necessary, the components should be wrapped in water repellent vapor phase, rust inhibitor type paper (1) and sealed with pressure sensitive tape (2). In lieu of rust inhibitor paper, small components shall be placed in plastic bags (3) containing vapor phase, rust inhibitor type crystals (4). The minimum amount of crystal to be used shall be three grams (.11 oz) per cubic foot of space. The plastic bags shall be sealed with pressure sensitive tape (2).

STORAGE PROCEDURES FOR EXTREME CLIMATES

- **Basic Equipment Units.**

- Tarp equipment to protect from adverse climate conditions.
  i.e. Cyclic freezing and thawing
- Torrential or corrosive rains
  Corrosive air-born chemicals or gases, etc.

- Equipment should not be stored in any area susceptible to damage.

i.e. Food waters
Unstable ground
Heavy traffic areas, etc.

- Paint and corrosion protection anti-fungus coatings should be checked periodically for any breach. Any breach which is discovered must be properly treated to retard any damage by corrosion or fungus.

- Related equipment drive components, chain drives, and/or other mechanical and electrical accessory equipment.

- Paint and corrosion protection and anti-fungus coatings should be checked periodically for any breach. Any breach which is discovered must be properly treated to retard any damage by corrosion or fungus.

➢ **Electric motors.**

Electric motors equipped with heaters should have then energized.
Carbon brushes should be lifted and held in place in the holders, above the accumulator, by the brush holder fingers. The accumulator, by the brush with a suitable material such as card board as a mechanical protection against damage.

➢ **Electric components.**

Control cabinets equipped with space heaters should have then energized.
All electrical components should be checked periodically for moisture, corrosion, or fungs. Desiccant bags should be changed each time.

4. ERECTION

4.1 SPECIAL RECOMMENDATIONS FOR ERECTION

➢ **Erection Sequence**

- Lump crusher
- Drive
- Pulley
- V Belt
- Guard for Pulley

Final erection and commissioning of crusher should be done by the assistance of an Elecon erector. Faultless erection as well as proper commissioning and good functioning may be ensured under this condition only.
The erection prerequisite includes qualified well trained staff, faultless erection tools as well as the site readily prepared foe erection and proper safely measurements for accident prevention.

4.2 ERECTION SUPERVISION

- After erection is accomplished the following has to be checked.
- Are all bearings and lubrication points supplied with grease or oil, have there been used the prescribed lubricants?
- Are all moving parts, especially the crushing elements running free of collision?
- Is the machine truly aligned?
- Are all screw and connections sufficiently driven home or locked conforming to specification
- Are all inspection doors closed and locked?
- Are all protecting elements mounted?
- Are all electrical interlocking binding agreed with the electrical department or user concerned in respect to material and safety processing?

4.3 ASSEMBLY INSTRUCTIONS

Elecon delumper is delivered in completely assembled condition, only drive assembly is assembled then mounted on to supporting frame and carefully placed on to the supporting jacks, then aligned and screwed.

"TREATMENT OF V-BELT"

And put on and drive home the V BELT.

Locate the protective housing correctly. After having completed the assembly check exactly the position of rotor shaft by means of the spirit level and align in precisely.

- The standard V-Belts are not resist\ant to oils, fats and chemicals, they must be protected from these materials. If this is not feasible, please use V-Belts of oil tight design.

- V-belts have already been in operation must not run together with new V-belts in a set. If new V-Belts of multiple grooves V-Belt drive should prematurely become unusable, a complete set of new belts is to be fitted, As soon as these new belts have been adapted to operation conditions, they can be put together to sets with old but still usable V-Belts.

NOTE: PLEASE REFER "TREATMENT OF V-BELT" (INTSALLATION, MAINTENANCE & TROUBLE SHOOTING GUIDE ATTACHED WITH THIS MANUAL FOR DETAILS INFORMATION.

4.4 RECOMMENDED TIGHTENING TORQUE FOR FASTENRES

Sr. No.	Thread Size.	PROPERTY CLASS 8.8		PROPERTY CLASS 10.9	
		TORQUE		TORQUE	
		Nm.	Kg.m.	Nm.	Kg.m.
1	M 4	3.0	0.30	4.3	0.44
2	M 5	6.0	0.62	8.9	0.91
3	M 6	10.3	1.05	15.1	1.54
4	M 8	25.0	2.54	37.0	3.73
5	M 10	50.0	5.11	74.0	7.50
6	M 12	87.0	8.90	128.0	13.08
7	M 14	138.0	14.17	205.0	20.82
8	M 16	214.0	21.82	315.0	32.06
9	M 18	304.0	30.97	435.0	44.10
10	M 20	431.0	43.91	615.0	62.54
11	M 22	586.0	58.74	835.0	85.0
12	M 24	745.0	75.94	1080.0	108.0
13	M 27	1090.0	111.0	1550.0	158.0
14	M 30	1480.0	150.0	2105.0	214.60
15	M 33	2013.0	205.20	2865.0	292.00
16	M 36	2586.0	263.60	3680.0	375.0
17	M 39	3346.0	263.30	3680.0	375.0
18	M 42	4135.0	421.0	5880.0	599.30

5 COMMISIONING

Before commissioning read thoroughly all operations and machine damage can be avoided.

Elecon cannot be held responsible for damages resulting from failing to observe these instructions.

The motor should only be switched on when the machine is idling. No feed material for foreign matter should be in the crusher. Feeding of the material should not be started until the machine is running smoothly and at full speed.

The material should be fed at an even rate and distributed over the whole width of the inlet. Pieces of Iron or other foreign matter should be removed from the feed material prior to feeding. The feed should be regulated in such a way that it can only be switched in when machine is in operation.

The crusher can run smoothly and be free from vibrations. Should there suddenly be imbalance, accompanied by loud rattling noised, this is usually due to foreign matter in the form of a large piece of iron which has not been separated from the feed material. This can however damage the machine. In such cases shut down the machine. The inertia forces of the rotor are such that the material in the machine is discharged by the machine comes to a standstill.

Smaller pieces of foreign matter will also be discharged by that time. Should there still be foreign matter in the machine when it is switched on again.

Please take care that the motor is secured against being switched on inadvertently during assembly or repair work.

Damaged parts must be replaced !

- **Checks:**

- Check that all lubrication points are supplied with sufficient and proper grease or oil. Check after a longer time has passed between erections and commissioning if greases and oils have still the required viscosity.

- Check the prescribed turning direction with control of end bearing in order to avoid collision of crushing elements.

- Is the complete scope of supply mounted, has erection been out expertly and safely? Is the functioning of protections home driven or locked?

5.1 ELECTRICAL INTERLOCKING

The switching on and off of Crusher with regard to the material flow within the plant has to be interlocked that way that discharging device, i.e. within material flow "backwards". will be started first on switching on the machine and the feeing deices will be stopped first, i.e. the motor has to be secured against accidental start.

5.2 COLD RUN

Before feeding the machine with material for the first time let it run idle for several hours to check

- The machine is running smoothly
- The rotor bearings get not too hot.
- The noise is not there.
- The screw and fastener are not loose.

5.3 WARM RUN

The motor should only be switched on when the machine is at no load. No Feeding material or foreign bogy matter should be started only when full speed is achieved ensuring smoothly. Should be started only when full speed is achieved ensuring that the machine is running smoothly.

The machine should be fed uniformly and distributed on the whole width of inlet. Remove first iron particles or other foreign body matters from the feeding material. The material feed should only be capable to started when the crusher is already running.

After several operation hours check bearing temperature, exactness of flanges ad packages and other motion procedures and correct them if necessary.

5.4 CORRECTION MECHANICAL COLD & WARM RUN.

The crusher should run smoothly and vibration less. Should there suddenly be imbalance accompanied by load rattling noises this is usually due to foreign matter in form of a large piece of iron which has not been removed from the feeding material. This could cause machine damages. In this case stop the feed first and then standstill the machine. The inertia forces of the rotor are such that the material in the machine is discharged by the time the machine comes to a standstill.

In order to prevent operation malfunctions we recommend to provide an over speed monitor (zero speed limit switch) at rotor shaft of crusher which will stop the motor in case of sudden falling down of crusher speed (i.e. when the crusher is clogged).

5.5 ACCEPTANCE:

The acceptance has to be effected in accordance with the contractually documented agreements.

In order to prove performance feed and discharge the crusher continuously with the determined grain size, the stated hardness and a moisture content not exceeding the limit.

The analyses have to be determined by means of the standard parameters.

5.6 TRAINING

In due time for erection and commissioning the operator has to provide mechanically technical well trained personnel for the instruction of the correct operation of the machine.

These personnel will receive from our Chief Erector instructions and directions how to operate the machine trouble less.

6 MAINTENANCE

Replacement of wearing parts (rotor blades, Wearing plates & Liner Plate) as per drawing, Drawing with part list enclosed in spare part list.

6.1 WEARING PLATES OF HOUSING

The wearing plates of housing are also fixed by screws at the housing and they can be replaced after having opened the housing back or cover.

Attention must be paid that the wearing plates of housing in the area of the of rotor. Therefore check these wearing plates very often for firm seat and wear condition.

6.2 INTERVAL OF INSPECTION OF CRITICAL PARTS

SR. NO	CRITICAL PARTS	INTERVAL INSPECTION	DETAIL WHICH IS TO BE INSPECTED
1	V-Belt	Fortnightly	Check Tension
2	Wear Pattern of rotor blade.	Weekly	Shape and pattern of rotor blade
3	Wear pattern of liner plate.	Weekly	Shape and pattern of liner plate

6.3 POSSIBLE TROUBLES & THEIR REMEDIES

1	Suddenly strong vibration of the machine	A Foreign matter in the feed material, for instance a bigger iron piece.	Remove the foreign material.
2	Excessive heating of the rotor bearings	Too much grease has been filled in bearings.	Excessive grease to be removed.
3	Rotor is blocked	Crushing chamber is over - charged by feeding product.	Check the discharging units. Discharge chute is clogged, must be cleaned. Check feeding rate.

6.4 LUBRIACTION INSTRUCTIONS AND MAINTENACE OF BEARINGS

Lubrication schedule, Lubrication plan and brochure for "Mounting of Roller Bearings". Lubrication should be done in strict compliance with the lubrication schedule and lubrication plan.

On assembly at the factory the bearings are filled with a quantity of grease being sufficient for about 2 weeks.

However before commissioning of the machine quantity of grease should be checked and if necessary renewed according to the lubrication plan. If the bearings shoe rust on their surfaces they must be replaced. This also applies if the machines has not been in operation for a while. Since starting commissioning the labyrinth seals must always be filled with grease in order to prevent dust from penetrating.

At intervals of about 6 months the bearing covers are to be opened as describe in

"MOUNTING & DISMOUNTING OF ROLLER BEARING"

NOTE: PLEASE REFER MOUNTING -DISMOUNTING & LUBRICATION GUIDE ATTACHED WITH THIS MANUAL . (SKF CATELOUGE PAGE NO:24 TO 31)

6.4.1 RE-LUBRICATION PLAN

ITEM	MACHINE PART	GREASE TYPE	LUBRICATION METHOD.	GREASE QTY. (EACH)	RELUBRICATION QTY. (EACH)
1	4 nos. Bearing housing of Rotor Shaft (Brg. no:22222 EK	Mobilu X Grease EP-2 Or Veedol AP2	By means of Grease Gun	850 gm	70 gm

ATTENTION:

On delivery the spherical roller bearing are filled with sufficient grease to last 2-3 weeks. Please check before commissioning! The lubrication intervals and quantities stated are average figures. The actual figures depend on the relevant operating conditions. Too much grease may cause an excessive rise in the bearing temperature. Other grease of equal quality may be used instead of the type indicated in the table.

7 SPARE PARTS LIST

ATTENTION:

We strongly emphasize to use original ELECON make spare parts for better performance of machine. ELECON will not take any kind of responsibility for the use of duplicate spare parts.

DO NOT SCALE

IF IN DOUBT ASK

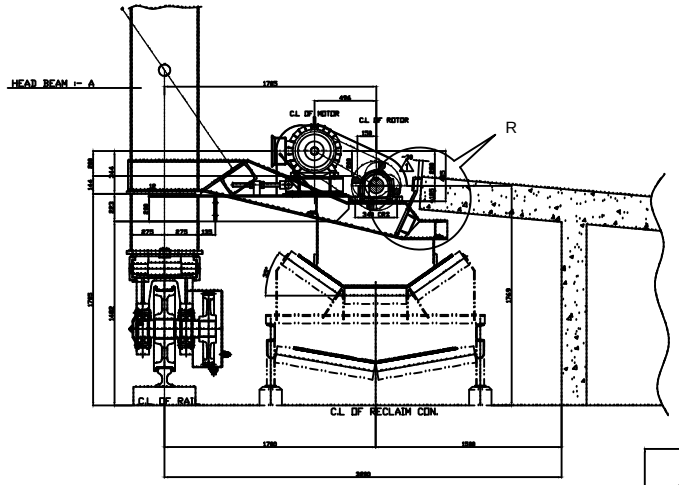

ELEVATION

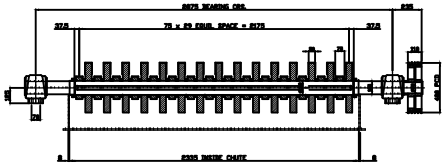

SECTION :- AA

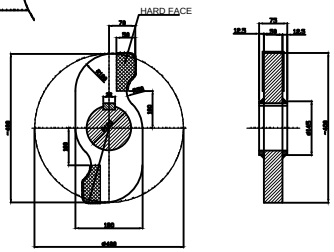

DETAIL OF BLADE

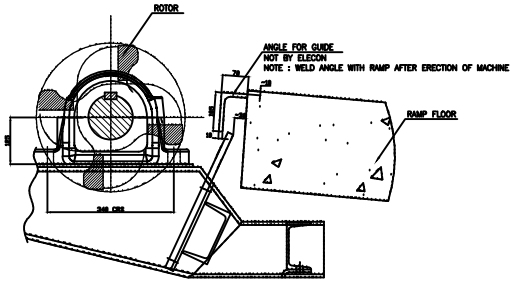

△2 ENLG. DTL. - R

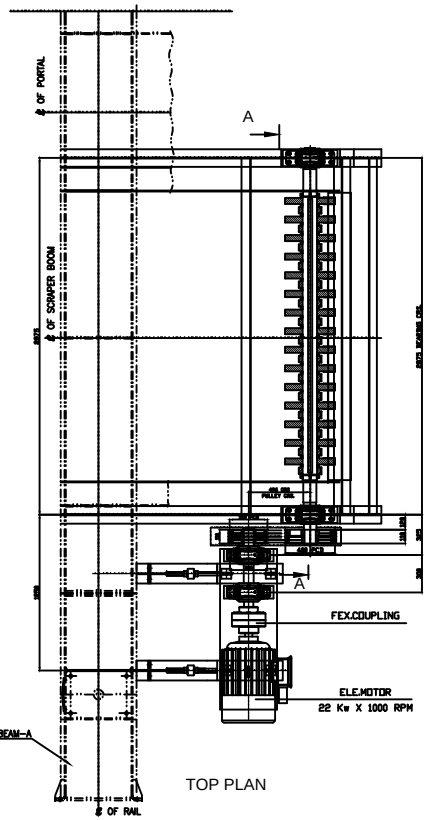

TOP PLAN

△1

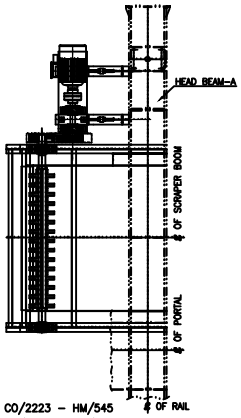

CO/2223 – HM/545
CO/2281 – HM/575
TOTAL QTY. – 2 NOS.

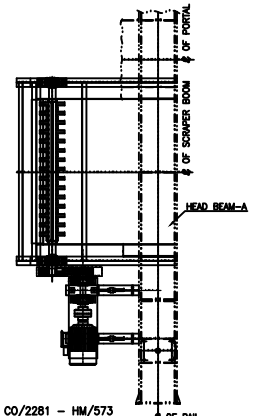

CO/2281 – HM/573
CO/2281 – HM/574
TOTAL QTY. – 2 NOS.

KEY PLAN

TECHNICA DETAIL FOR DELUMPER

MATERIAL :- NPK / DAP
CAPACITY :- 50 TPH (RATED) 60 TPH DESIGN
FEED SIZE :- 2.5 m.m TO 175 m.m
PRODUCT SIZE :- -6 m.m
BULK DENSITY :- 0.96 T/M^3
MOISTURE CONTENT :- 5 TO 10 % MAX.
BELT WIDTH :- 1400 m.m
TROUGHING ANGLE :- 35 Deg.
ROTOR RPM :- 750

MATERIAL OF CONSTRUCTION

ROTOR SHAFT :- EN 9 / CK -60 FORGE
ROTOR DIA :- 400 m.m
ROTOR BLADE :- C-45
BEARING SIZE :- 22218 EK

DRIVE DETAIL

MOTOR :- 22 Kw x 1000 RPM
SQ.CAGE MOTOR
ROTOR PULLEY :- 400 PCD.
DRIVE PULLEY :- 315 PCD.
ZERO SPEED SWITCH.

G.A OF FULL TYPE SCRAPER RECLAIMER

REF. DRAWING NO :- T09215/0 (CO/2223)
REF. DRAWING NO :- T09798/OS (CO/2281)
REF. DRAWING NO :- T09799/0 (CO/2281)

IFFCO INDIAN FARMERS FERTILISER CO-OP. LTD. PARADEEP
INDIAN FARMERS FERTILISER COOPERATIVE LIMITED.
(PARADEEP UNIT)
VIII - MUSADIA, PARADEEP
DIST. - JAGATSINGHPUR, ORISSA
PIN CODE : 754 142 (INDIA)

ELE.	STRU.	MECH.	SEC.	DATE.	NAME	ISSUE.	AMENDMENTS
		PCS	PCS	13/09/12	SRK	△2	ENLARGE DETAIL –R ADDED.
		PCS	PCS	12/09/12	SRK	△1	DIMENSION ADDED IN ELEVATION & KEY PLAN ADDED.

DRAWN	S.R.KACHHIA	7/7/12
CHECKED	K.C.JETHVA	
SEC.	P.C.SHAH	
MECH.		
STRU.		
ELE.		
SCALE :–		

G.A.OF DELUMPER

(SIZE :- 415 DIA. x 2250 LG.)

THIS DRAWING IS THE PROPERTY OF ELECON ENGINEERING CO. LTD. VALLABH VIDYANAGAR GUJARAT. LOANED TO THE RECIPIENT WHO AGREES THAT IT SHALL NOT BE GIVEN OUT COPIED OR DUPLICATED FOR THE USE OF ANOTHER BUT USE ONLY BY THE RECIPIENT FOR THE PURPOSE OF MAINTAINING THE EQUIPMENT TO WHICH IT REFERS.

MAIN GR. NO. | SUB GR. NO. | ORDER NO. | M/C NO | DRG NO. M17138/1 | ISSUE △2

ELECON

PAPER SIZE :– 817x570

DELUMPER

G.A. DRAWING NO: - M17138/1

SR. NO.	DESCPRITION	QTY/ M/c.	PART NO.
1	Rotor assly	1	M17295/2
2	Drive Unit	1	M17254/2
3	Guard for Drive unit	1	M17343/1
4	Zero speed Limit Switch	1	M17393/2
5	V- Belt SPC –1400 mm	1	M17138/1

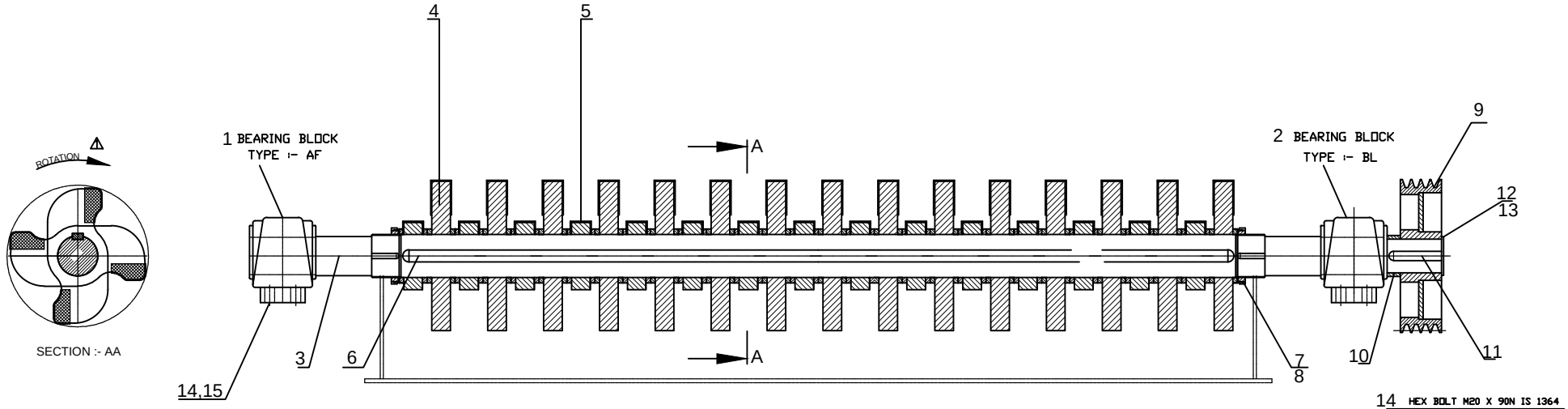

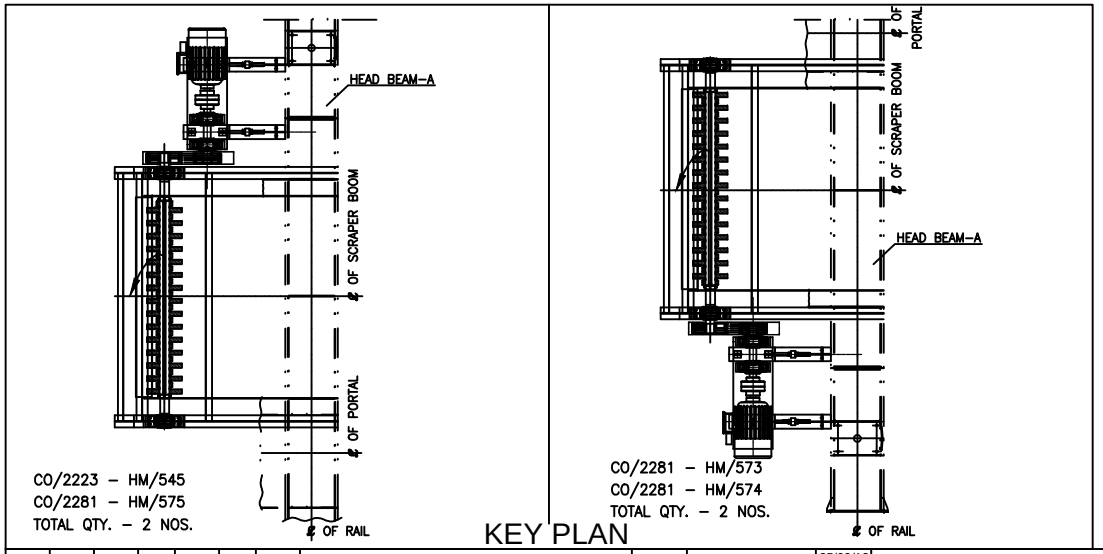

KEY PLAN

ELE.	STRU.	MECH.	SEC.	DATE.	ZONE.	ISSUE.	AMENDMENTS
			SRK	07/11/12		⚠	DIM 2397 & ROTOR ROTATION ADDED DRG.REVISED.

DRAWN	S.R.KACHHIA	25/09/12
CHECKED	K.C.JETHVA	
APPROVED SEC.	P.C.SHAH	
APPROVED MECH.		
APPROVED STRU.		
APPROVED ELE.		
SCALE :-		

ROTOR ASSLY.

DELUMPER SIZE :- 415Ø X 2250

THIS DRAWING IS THE PROPERTY OF ELECON ENGINEERING CO. LTD. VALLABH VIDYANAGAR GUJARAT. LOANED TO THE RECIPIENT WHO AGREES THAT IT SHALL NOT BE GIVEN OUT COPIED OR DUPLICATED FOR THE USE OF ANOTHER BUT USE ONLY BY THE RECIPIENT FOR THE PURPOSE OF MAINTAINING THE EQUIPMENT TO WHICH IT REFERS.

MAIN GR. NO.

SUB GR. NO.

ELECON

ORDER NO.

M/C NO

DRG NO. M17295/2

ISSUE. ⚠

Rotor Assembly for Lump Crusher

DRAWING NO :- M17295/2

SR. NO.	DESCPRITION	QTY/ M/c.	PART NO.
1	Bearing block with bearing-AF	1	22-3110-00
2	Bearing block with bearing-BL	1	22-3110-00
3	Head shaft	1	M17192/2
4	Blade	15	M17243/3
5	Blade	15	M17245/3
6	Rotor shaft key	1	M17203/4
7	Lock nut GWS-349	2	M17295/2
8	Lock washer MB22	2	M17295/2
9	4 v belt pulley	1	M17248/3
10	Spacer	1	M17248/3
11	Key OER K 25 x 14 x 160 mm lg		M17295/2
12	Hex. screw M24 x 65	1	M17295/2
13	Lock plate	1	M17295/2
14	Hex head bolt & nut M20 x 90	4	M17295/2
15	Spring lock washer B20	4	M17295/2

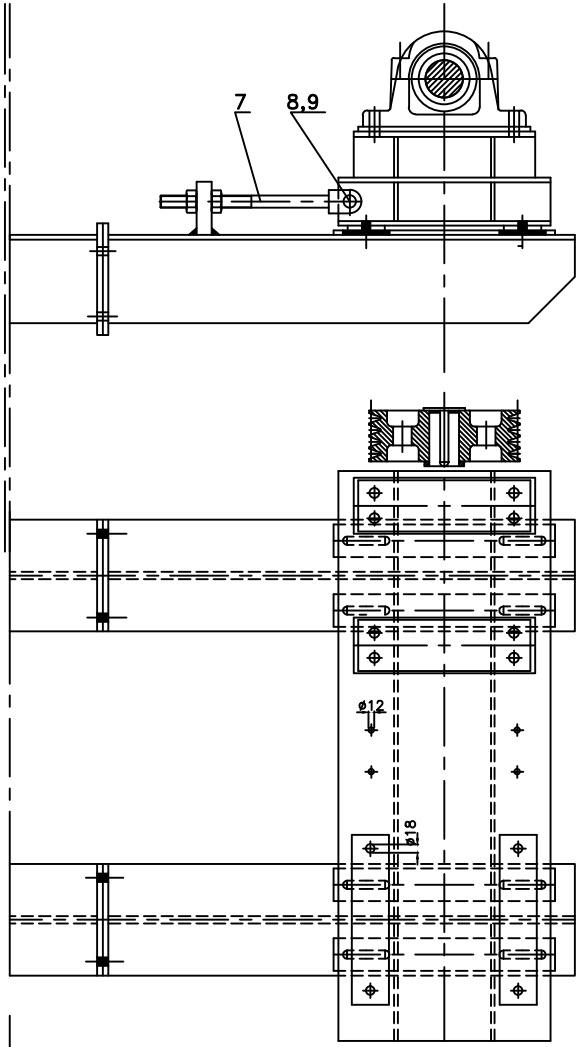

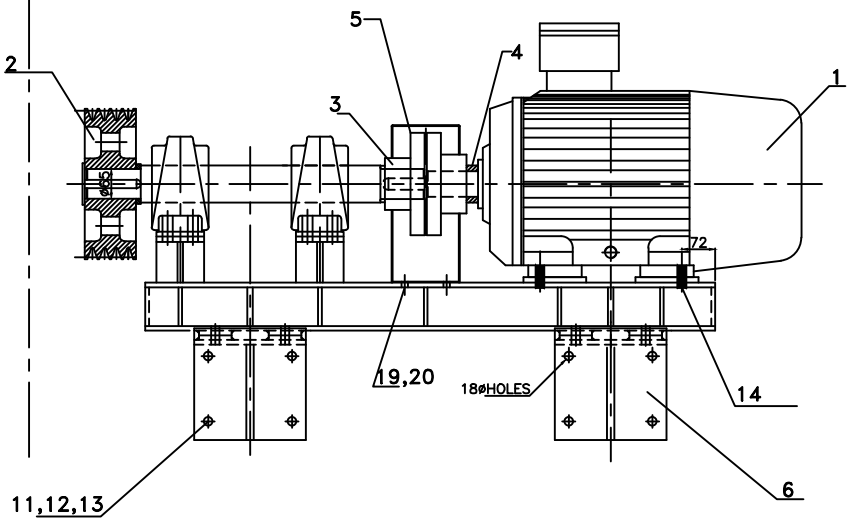

ELE.MOTOR :– 22 kw x1500 RPM FREME SIZE :– ND 200L	
JACK SHAFT ASSLY	M17246/3
DRIVE BASE FRAME	M17257/1
TENSIONING ROD	M17258/3
BORE DETAIL FC 8	M17253/4
SPACER MOTOR	M17246/3
GUARD FOR COUPLING	M17259/4

ELE.	STRU.	MECH.	SEC.	DATE.	ZONE.	ISSUE.	AMENDMENTS

DRAWN	S.R.KACHHIA	22/5/12
CHECKED	K.C.JETHVA	
APPROVED SEC.	P.C.SHAH	
APPROVED MECH.		
APPROVED STRU.		
APPROVED ELE.		
SCALE :–		

DRIVE UNIT

THIS DRAWING IS THE PROPERTY OF ELECON ENGINEERING CO. LTD. VALLABH VIDYANAGAR GUJARAT. LOANED TO THE RECIPIENT WHO AGREES THAT IT SHALL NOT BE GIVEN OUT COPIED OR DUPLICATED FOR THE USE OF ANOTHER BUT USE ONLY BY THE RECIPIENT FOR THE PURPOSE OF MAINTAINING THE EQUIPMENT TO WHICH IT REFERS.

MAIN GR. NO.

SUB GR. NO.

ELECON

ORDER NO.

M/C NO

DRG NO. M17254/2

ISSUE.

DRG.NO. M17254/2 ISSUE

Drive & Base Assembly

DRAWING NO :- M17254/1

SR. NO.	DESCPRITION	QTY/ M/c.	PART NO.
1	Electric motor AC Squiral cage 22 Kw x 1500 RPM	1	M17254/1
2	Jack shaft assembly	1	M17246/3
3	EFC-8 Coupling	1	M17253/4
4	Spacer	1	M17299/4
5	Guard	1	M17259/4
6	Base Drive Frame	1	M17257/1
7	Tension arrangement	2	M17258/3
8	Hex. head bolt & nut M20 x 85	8	M17254/1
9	Spring lock washer B20	8	M17254/1
10	Machined plain washer A22	2	M17254/1
11	Hex. head bolt & nut M16 x 75	4	M17254/1
12	Spring lock washer B16	4	M17254/1
13	Hex. head bolt & nut M10 x 30	4	M17254/1
14	Spring lock washer B10	4	M17254/1
23	Support for tie beam	1	M17257/2

BEARING BLOCK ASSEMBLY-AF

DRAWING NO :- 22-3110-00

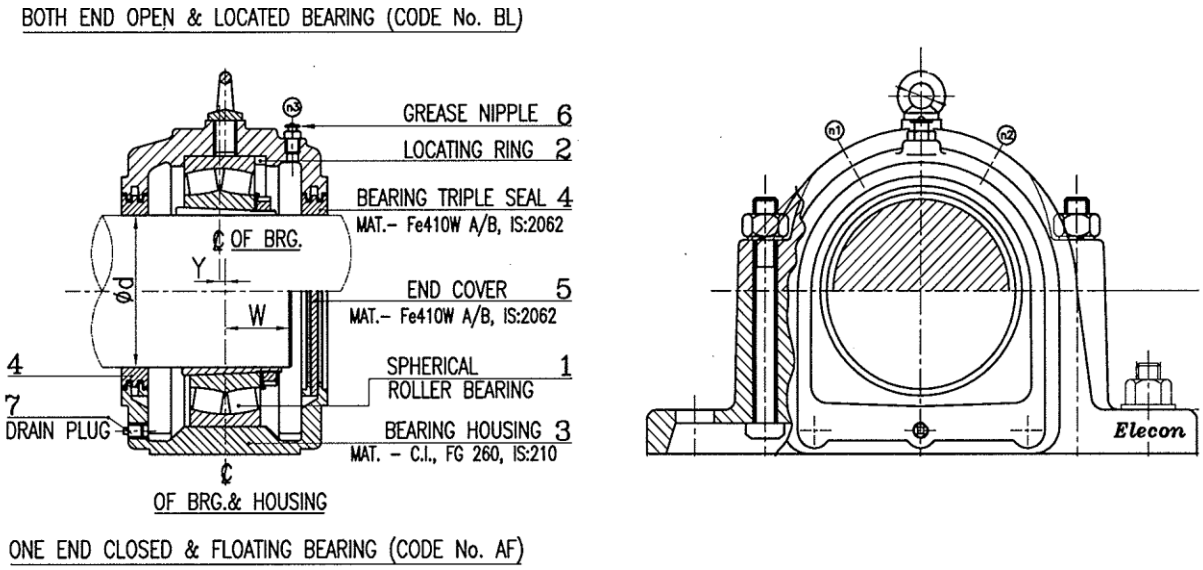

SR. NO.	DESCPRITION	QTY/ M/c.	PART NO.
1	Spherical roller bearing 22222 CK	1	22-3110-00
3	Brg. Housing	1	22-3000-01
4	Bearing Triple Seal	2	22-3000-02
5	End Cover	1	22-3000-03
6	Grease Nipple Button Head M16x1.5P IS4009	1	22-3110-00
7	Plug is 9645 Plug IS 9645 M16x1.5P	1	22-3110-00
9	Eye Bolt IS 4190 M12	1	22-3110-00

BEARING BLOCK ASSEMBLY-BL

DRAWING NO :- 22-3110-00

SR. NO.	DESCPRITION	QTY/ M/c.	PART NO.
1	Spherical roller bearing 22222 CK	1	22-3110-00
2	Locating Ring FRB 10/200	1	22-3110-00
3	Brg. Housing	1	22-3000-01
4	Bearing Triple Seal	2	22-3000-02
6	Grease Nipple Button Head M16x1.5P IS4009	1	22-3110-00
7	Plug is 9645 Plug IS 9645 M16x1.5P	1	22-3110-00
9	Eye Bolt IS 4190 M12	1	22-3110-00

DO NOT SCALE

IF IN DOUBT ASK

DRG. NO.

TYPE :- B (THROUGH SHAFT)

TOP HALF VIEW SHOWING LOCATING BEARING POSITION.

SUFFIX - L

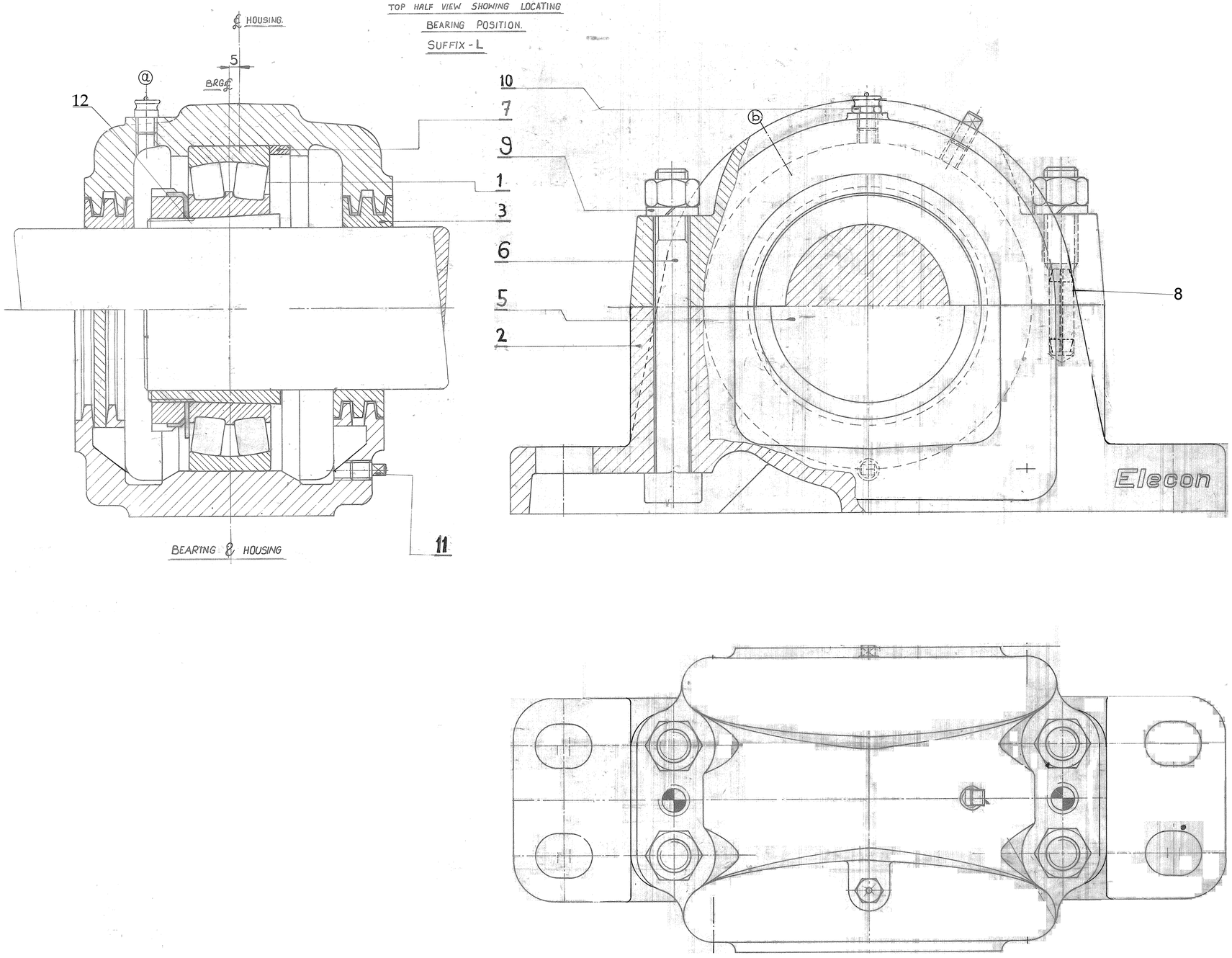

ELE.	STRU.	MECH.	SEC.	DATE	ZONE	ISSUE	AMENDMENTS
				28-12-90		3	GREASE NIPPLE BUTTON HEAD WAS CONICAL HEAD
				27-10-90		2	Grease nipple & Plug are changed.
				30-10-86		1	Drg. revised As per file note no T416/7108 BRG

DRAWN	F.R. Panchagam	7-3-84
CHECKED		
APPROVED SEC.		
MECH.		
STRU.		
ELE.		

SCALE :- 1:1

TWO PIECE PILLOW BLOCK ASSLY

FOR BRG. NO. 22218 CK. + H 318. TYPE:-22-3090

MAIN GR. NO.

ELECON

THIS DRAWING IS THE PROPERTY OF ELECON ENGINEERING CO. LTD. VAL... LOANED TO THE RECIPIENT WHO ... GIVEN OUT COPIED OR DUPLICATED ... LY BY THE RECIPIENT FOR THE ... TO WHICH IT REFERS.

SUB GR. NO. | ORDER NO. | M/C NO.

D07456/1

ISSUE 3

J.J. A2-2000-2-82

ASSLY. OF PILLOW BLOCK AF FOR JACK SHAFT-AF

DRAWING NO :- D07456/1

SR. NO.	DESCPRITION	QTY/ M/c.	PART NO.
1	Spherical roller bearing 22218-K	1	D07456/1
2	Bearing housing	1	D07457/0
3	Triple seal	1	D07458/4
5	End cover	1	D07415/4
6	Rectangular head bolt Sr No.3	4	D07366/4
8	Spring dowel sleeve	2	D07456/1
9	Spring lock washer B16	4	D07456/1
10	Conical head Grease nipple M10 X 1	2	D07456/1
11	Plug M10 X 1	2	D07456/1
12	Bearing adaptor sleeve H318	1	D07456/1

ASSLY. OF PILLOW BLOCK BL FOR JACK SHAFT-BL

DRAWING NO :- D07456/1

SR. NO.	DESCPRITION	QTY/ M/c.	PART NO.
1	Spherical roller bearing 22218-K	1	D07456/1
2	Bearing housing	1	D07457/0
3	Triple seal	1	D07458/4
5	End cover	1	D07415/4
6	Rectangular head bolt Sr No.3	4	D07366/4
7	Bearing locating ring FRB 10/160	1	D07456/1
8	Spring dowel sleeve	2	D07456/1
9	Spring lock washer B16	4	D07456/1
10	Conical head Grease nipple M10 X 1	2	D07456/1
11	Plug M10 X 1	2	D07456/1
12	Bearing adaptor sleeve H318	1	D07456/1

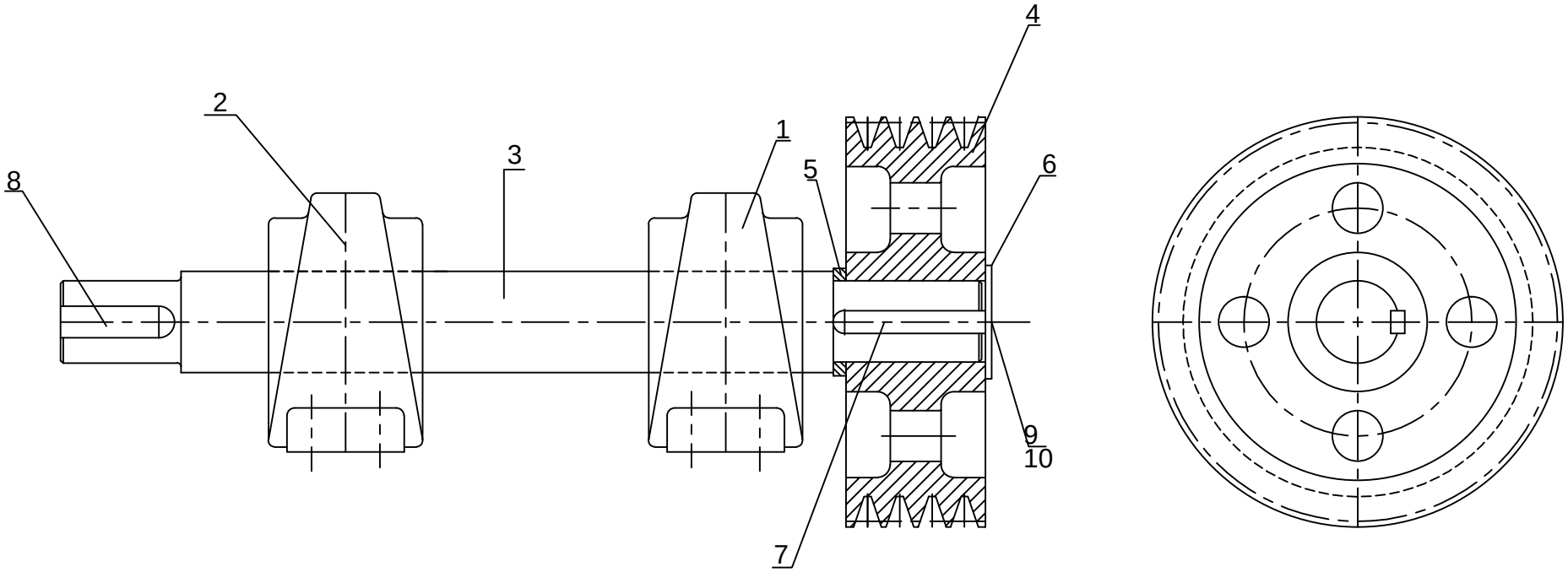

ISSUE	DATE	AMENDMENTS

THIS DRAWING IS THE PROPERTY OF ELECON ENGINEERING CO. LTD. LONAED TO THE RECIPIENT WHO AGREES THAT IT SHALL NOT BE GIVEN OUT. COPIED OR DUPLICATED FOR THE USE OF ANOTHER BUT USED ONLY BY THE RECIPIENT FOR THE PURPOSE OF MAINTAINING THE EQUIPMENT TO WHICH IT REFERS.

DRAWN		S.R.KACHHIA 06/09/12
CHECKED		K.C.JETHVA
APPROVED	SEC.	P.C.SHAH.
	MECH	
	STRU.	
	ELEC.	

JACK SHAFT ASSEMBLY

MACHINE No.	ORDER NO.	SCALE
		~

ELECON

DRG. NO. M17246/3

SHEET NO. | ISSUE

JACK SHAFT ASSEMBLY

DRAWING NO :- M17246/3

SR. NO.	DESCPRITION	QTY/ M/c.	PART NO.
1	Two piece bearing block assembly –BL	1	D07456/1
2	Two piece bearing block assembly –BF	1	D07456/1
3	Jack shaft	1	M17251/3
4	4 v belt pulley	1	M17247/3
5	Spacer	1	M17250/4
6	Lock plate	1	M17304/4
7	Key OER 18x 11x 115	1	M17246/3
8	Key OER 18 x 11 x 90	1	M17246/3
9	Hex. Screw M20 x 45	1	M17246/3

Installation and Maintenance of V-Belt

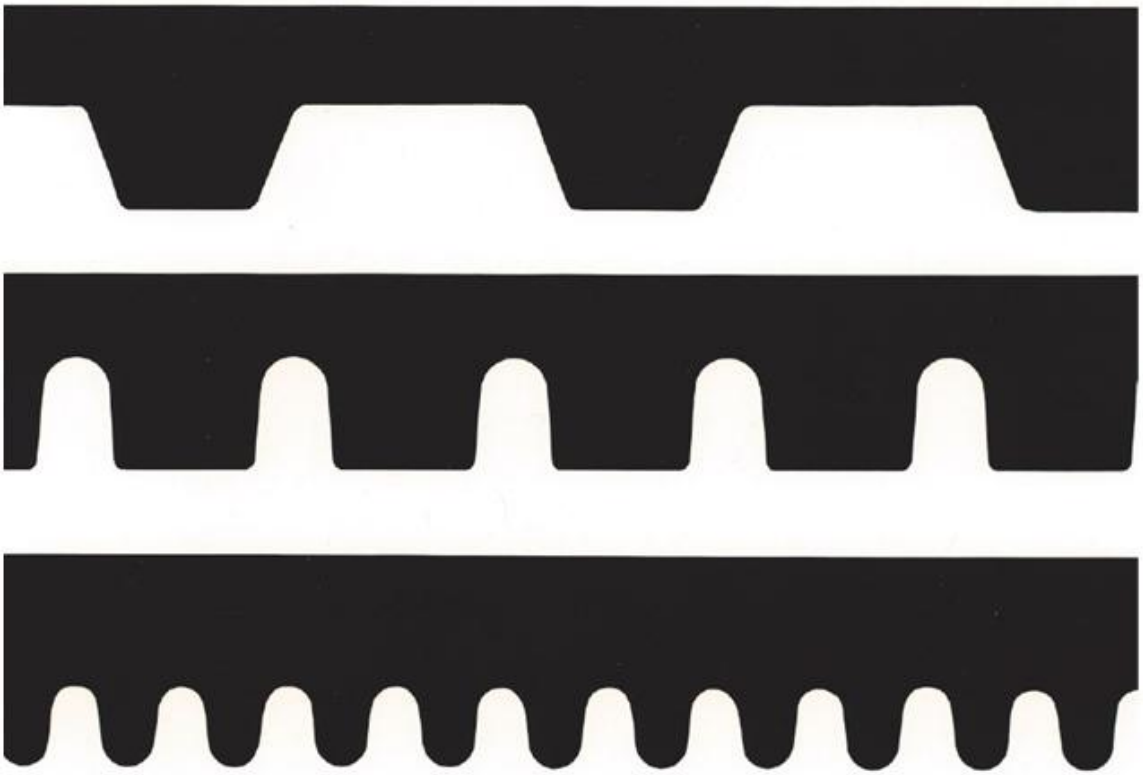

Installation Procedure

Inspect Drive Components

Whether you are just installing new belts or a completely new drive, worn bearings, bent shafts or other components that might cause future problems should be replaced at this time. If installing belts only, check existing sheaves carefully for worn grooves or other damage. (Always use gloves or a rag for feeling in the sheave grooves so that you will not cut your finger on nicks or burrs.)

Worn grooves can be detected by feel, by sight or with the aid of gauges, inserted in the sheave grooves. (These gauges are available from your local Thermoid distributor and are furnished with complete instructions.) If the grooves are worn excessively, we recommend that the sheave be replaced. Worn grooves can shorten belt life, which in turn increases the cost of maintenance.

Rusty or dirty sheaves also impair a drive's efficiency. Clean existing sheaves thoroughly before installing a new set of belts.

Further inspection procedures are discussed starting on page 14.

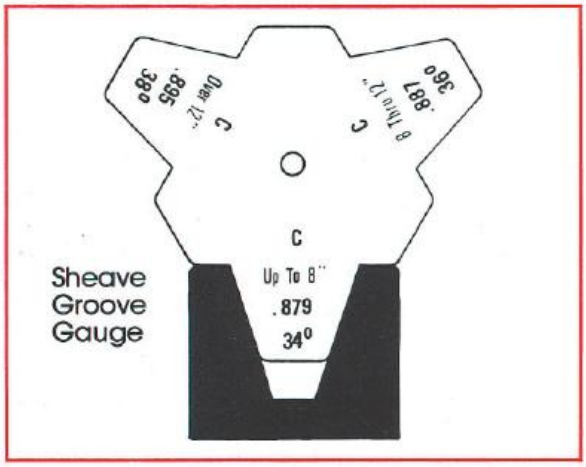

To Remove Sheaves

1. Loosen and remove cap screws.

2. Insert three cap screws (in JA through J Bushings) or two cap screws (in M through S Bushings) in tapped removal holes and progressively tighten each one until mating part is loose on bushing. (Exception: If mating part is installed with cap screw heads next to motor, with insufficient room to insert screws in tapped holes, loosen cap screws and use wedge between bushing flange and mating part.)

3. Remove mating part from bushing and, if necessary, bushing from shaft. If bushing won't slip off shaft, wedge screwdriver blade in saw cut to overcome tightness.

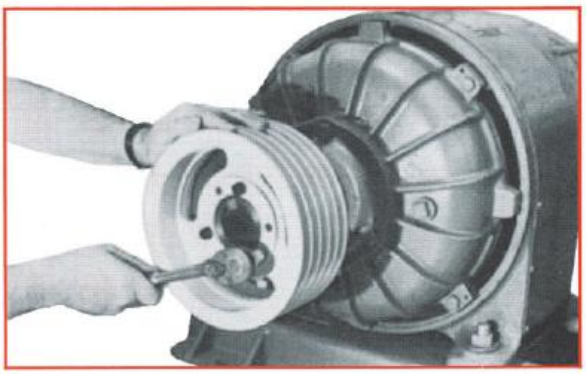

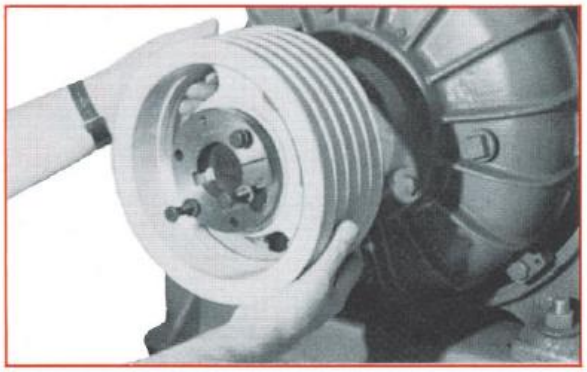

Mount Sheaves

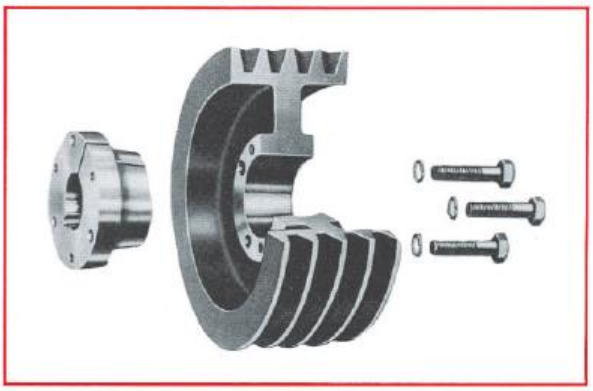

Note: Use No Lubricants

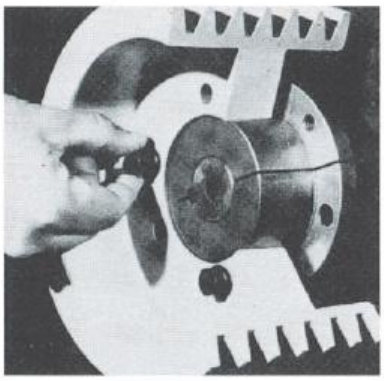

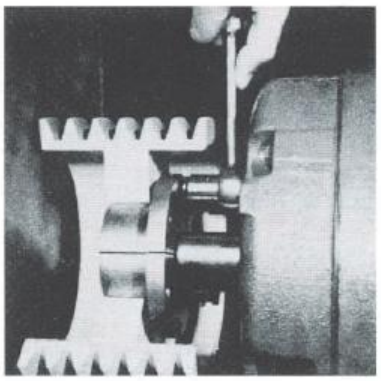

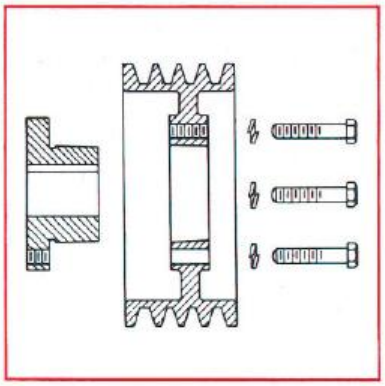

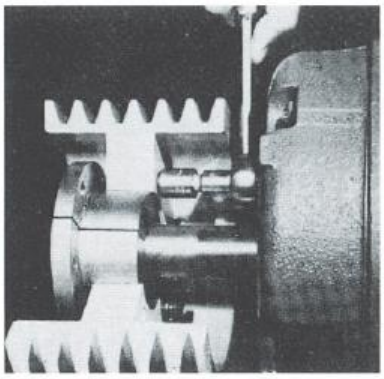

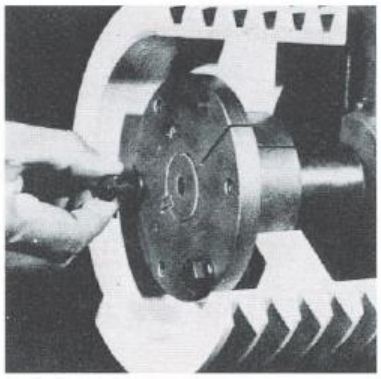

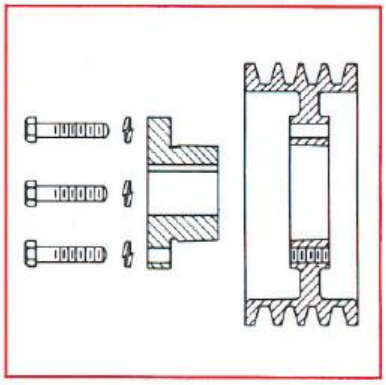

1. Make sure the bore of the sheave and the tapered cone surface of the bushing are free of all foreign substances such as paint, dirt and lubricants.

2. Place bushing into sheave as illustrated (whichever applies). Loosely insert the cap screws into this assembly. Do not lubricate the cap screw threads. (Note: on M – S bushings, install the bushing in the hub in such a way that the two extra holes in the hub are located as far from the sawcut in the bushing as possible.)

3. With key in keyseat of shaft, slide the sheave/bushing assembly to its desired position with cap screw heads to the outside. (A few small sheaves may have to be installed with the cap screws on the inside.) If the bushing is hard to slide onto the shaft, wedge a screwdriver blade into the saw cut to overcome the tightness. Align sheaves by sight, but do not tighten yet.

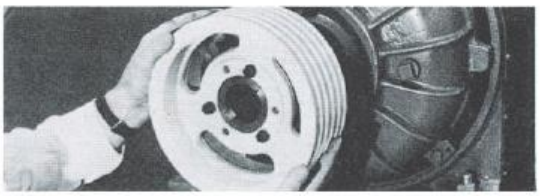

About Bushings

The "QD" type bushing is designed so that no setscrews are required over the keys. Galling of the key is therefore eliminated.

The bushing is split by sawcutting through not only the tapered portion but also the flange. When necessary, the sawcut is extended into the bottom of the keyseat 180° opposite the split. This extension of the sawcut acts as a hinge point. As the bushing is drawn into the mating hub, the sides of the keyseat squeeze the sides of the key to hold it firmly in place. This squeezing action is dependent upon proper fit of the key in the keyway.

A unique feature of the "QD" type bushing is that the capscrews can be installed from either side of the sheave. Also, since bushing dimensions have been standardized by several manufacturers, bushings are interchangeable.

The wedging action of the "QD" bushing takes place between the tapered external surface of the bushing and the tapered hole of the sheave. The tightening force of the capscrews is multiplied by the wedging action of the tapered surfaces. **NO lubricating oils, molybdenum disulfide compounds or other anti-friction materials are to be used on these surfaces.** Use of these materials and normal wrench torques on the capscrews can multiply the wedging forces beyond the bursting strength of the hub. Therefore, such practices must be avoided to insure safe operation of the drive. Helped by the sawcut the "QD" bushing wraps itself around a shaft with zero clearance. Fretting and corrosion between bushing and shaft is locked out. Each bushing is furnished with installation instructions. Follow them carefully.

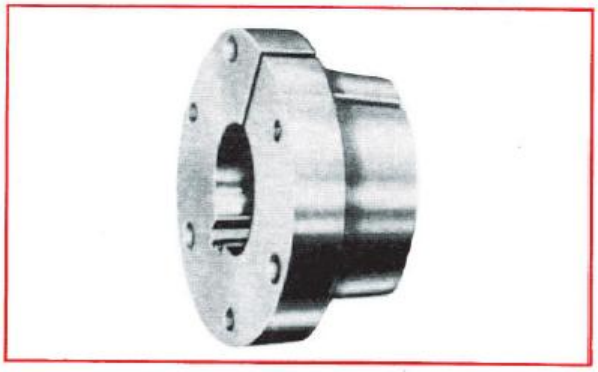

Check Alignment

Although alignment is not as critical in V-belt drives as in others, proper alignment is essential to long belt and sheave life.

First, make sure that drive shafts are parallel. The most common causes of misalignment are nonparallel shafts and improperly located sheaves. Where shafts are not parallel, belts on one side are drawn tighter and pull more than their share of the load. As a result, these belts wear out faster, requiring the entire set to be replaced before it has given maximum service. If misalignment is in the sheave, belts will enter and leave the grooves at an angle, causing excessive belt cover and sheave wear.

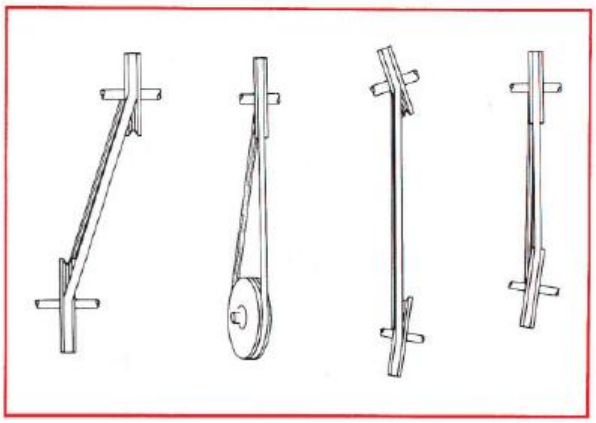

Shaft alignment can be checked by measuring the distance between the shafts at three or more locations. If the distances are equal, then the shafts will be parallel.

To check the location of the sheaves on the shafts, a straightedge or a piece of string can be used. If the sheaves are properly lined up, the string will touch them at the points indicated by the arrows in the accompanying sketch. Rotating each sheave a half revolution will determine whether the sheave is wobbly or the drive shaft is bent. Correct any misalignment. Try to keep pulleys aligned within ½ degree.

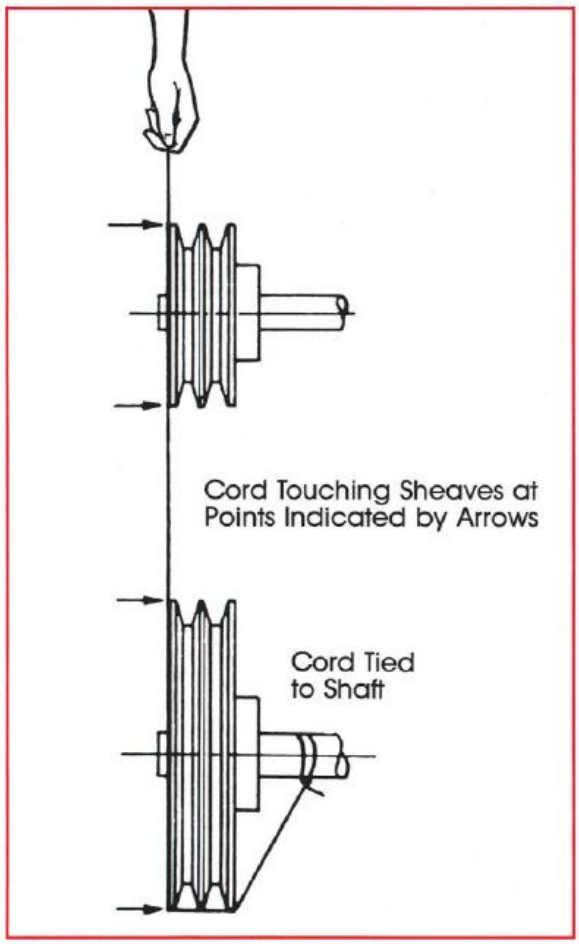

With sheaves aligned, tighten cap screws evenly and progressively. Apply the recommended torque to cap screws as listed. NOTE: There should be 1/8" to 1/4" gap between the mating part hub and the bushing flange. If gap is closed, the shaft is seriously undersize.

Bush.	Torque Capacity (in.-lbs.)	Wrench Torque (ft.-lbs.)
JA	1,000	5
SH	3,500	9
SDS	5,000	9
SD	5,000	9
SK	7,000	15
SF	11,000	30
E	20,000	60
F	30,000	75
J	45,000	135
M	85,000	225
N	150,000	300
P	250,000	450
W	375,000	600
S	625,000	750

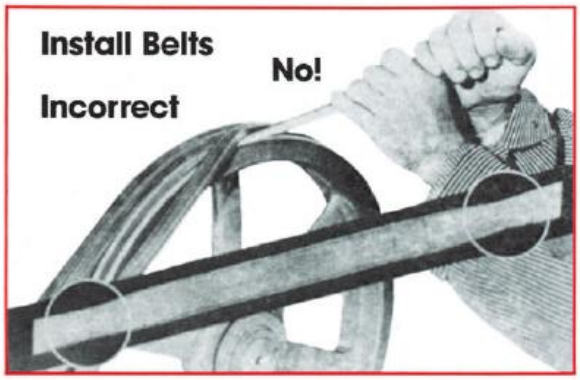

When belts are forced into the sheave with a screwdriver or other wedge, the outer fabric is often ruptured and cords broken.

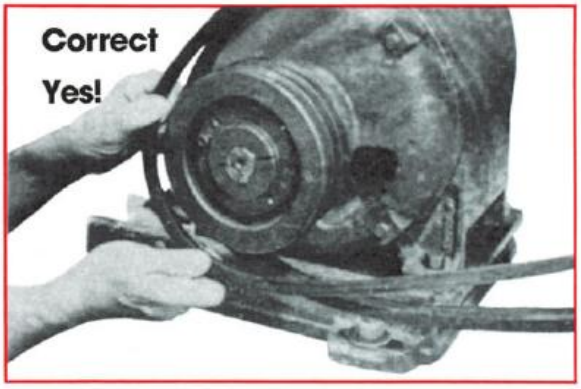

It is well worth the time to move the driver unit forward so V-belts can be slipped easily into the sheave groove without damage.

Shorten the center distance between the driven and driver sheave so the belts can be put on without the use of force.

While the belts are still loose on the drive, rotate the drive until all the slack is on one side. Then increase the center distance until the belts are snug. The drive is now ready for tensioning.

Note: Never "roll" or "pry" the belts into the sheave grooves. This can damage the belt cords and lead to belt turnover, short life or actual breakage. Moreover, it is both difficult and unsafe to install belts this way.

Keep takeup rails, motor base or other means of center distance adjustment free of dirt, rust and grit. Lubricate adjusting screws and slide rails from time to time.

Tension the V-Belts

Without exception, the most important factor in the successful operation of a V-belt drive is proper belt tensioning. A large percentage of all problems with V-belt drives can be corrected by correctly **"tensioning the belts."** Too little tension can cause belt slip and belt whip. Conversely, too much tension can damage bearings.

Most V-belt drive catalogs today contain tensioning instructions based on the force deflection method. This method gives the user a means of measuring the tightness of an individual belt. Common to all published information is the amount of deflection used, 1/64 inch for every inch of belt span. Unfortunately, the amount of force required to deflect a belt varies from manufacturer to manufacturer and from belt grade to belt grade. Also, successful drive operation depends on the total force between pulleys whether the drive consists of one or ten belts. The individual belt tension on a 10-belt drive is less than the individual belt tension if only 7 belts are used on the same drive. Yet with proper total tension each of these drives could be made to operate successfully.

We realize that many experienced maintenance men have developed a "feel" for belt tension—but because of improved materials now being used by many manufacturers, today's belts can "feel" considerably different on the drive. Therefore, if a numerical method is desired, we'd like to suggest using Method 2 —Force/Deflection.

Maintaining correct tension is the most important rule of V-belt care. This will give belts longer life. **Unless extraordinary circumstances prevail, the proper tension for a V-belt is the lowest tension that eliminates slippage when the belt is under its peak load.**

WARNING

When tensioning a drive, work only when machinery is stopped and properly prevented from accidentally starting. Keep guards on machinery when running.

Make notes here of difficult drives in your manufacturing area.

V-Belt Method 1—Lack of Squeal

Minimum tension is applied until slippage squeal disappears when the drive is operating at the maximum peak load.

STEP 1: With all belts in their proper grooves, adjust the center to take up all slack, ensuring belts are fairly taut.

STEP 2: Start drive. Run for several minutes unless the belts squeal as the result of slippage at start-up or peak loading. Shut down immediately if squealing is noted.

STEP 3: Stop drive and re-set tension to higher level being sure that each belt feels equally taut.

STEP 4: Start drive again. Repeat re-tensioning procedure until squealing disappears.

Observe belts for squealing frequently during first 24 hours of operation. Retension after 24 hours when belt sag has been normalized.

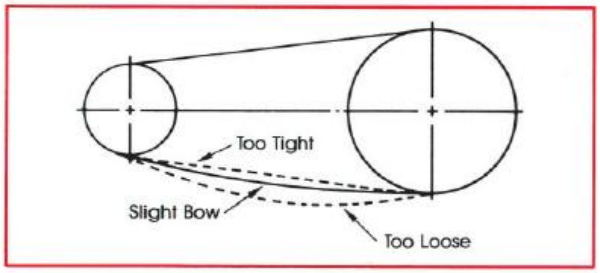

V-Belt Method 2—Force/Deflection

Use this method for tensioning drives for which the grade of belt, rated belt capacity, service factor, design horsepower, etc., are known. The force deflection values are valid for average condition and if the drive has at least two belts, has been designed following current Thermoid catalogs and are within small sheave diameter, RPM, and speed ratio ranges per accompanying tables. Should the drive depart from these ranges, refer to Elgin for deflection force recommendations.

NOTE: If the drive was designed from editions dated prior to 1976, or using information other than found in our catalogs, use "Method 1—Lack of Squeal" or contact Elgin. Improper tensioning will result from filling all existing sheave grooves on older designed drives with higher load carrying V-belts and applying current tensioning values. We will provide updated V-belt recommendations with specific tensioning for customers that complete and submit drive data form pg. 22.

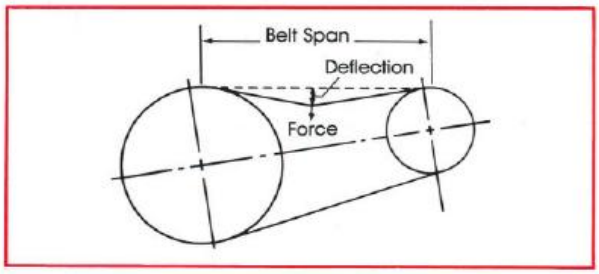

STEP 1: After measuring the belt span (see sketch) use a belt tension tester and apply a perpendicular force to any ONE of the belts at the span mid-point. Measure the force required to deflect any one of the belts 1/64 inch for every inch of span length. EXAMPLE: A 32" span deflection would be 1/64 inch x 32 or 1/2 inch.

NOTE: When new belts are installed on a drive, the tension will drop rapidly the first few hours. Thus, for new belts, multiply the maximum deflection force shown in the tensioning tables by 1.33. Check tension frequently during the first 24 hours of operation. Subsequent retensioning should fall between the minimum and maximum forces shown in the tables.

STEP 2: Compare step 1 deflection force reading with range of force in the tensioning tables. If the force is below the minimum after any adjustment per above note then the belts are too loose.

If the force is greater than the maximum after any adjustment per above note then the belts are too tight.

Readjust measured drive tension until the deflection force is between the maximum and minimum values shown in or calculated from the respective tensioning tables. Retension after 24 hours when belt sag has been normalized.

The deflection forces in these tables apply only to the listed Thermoid general trade belts currently being manufactured.

Prime Mover V-Belt Tensioning Table

Belt*	Small Sheave Dia. Range (Inches)	Small Sheave RPM Range	Speed Ratio Range	Belt Deflection Force in Lbs.			
				Prime Mover		Prime Mover Cogged	
				Min.	Max.	Min.	Max.
A*	3.0	1750 to 3600	2.0 to 4.0	2.9	4.2	3.8	5.4
	3.2			3.1	4.5	3.9	5.6
	3.4- 3.6			3.5	5.0	4.1	5.9
	3.8- 4.2			3.8	5.4	4.3	6.3
	4.6- 7.0			4.6	6.6	4.9	7.1
B*	4.6	1160 to 1800	2.0 to 4.0	5.1	7.5	7.1	10
	5.0- 5.2			5.7	8.4	7.3	11
	5.4- 5.6			6.0	8.8	7.4	11
	6.0- 6.8			6.6	9.6	7.7	11
	7.4- 9.4			7.4	11	7.9	12
C*	7.0	870 to 1800	2.0 to 4.0	9.1	13	12	18
	7.5			9.7	14	12	18
	8.0- 8.5			11	16	13	18
	9.0-10.5			12	17	13	19
	11.0-16.0			13	20	13	19
D*	12.0-13.0	690 to 1200	2.0 to 4.0	20	29		
	13.5-15.5			22	33		
	16.0-22.0			25	37		
E	21.6	435 to 900	2.0 to 4.0	33	48		
	24.0			33	48		

*For Prime Mover banded belts multiply the force in the table by the number of belts in the band.

Maxipower V-Belt Tensioning Table

Belt	Small Sheave Dia. Range (Inches)	Small Sheave RPM Range	Speed Ratio Range	Belt Deflection Force in Lbs.			
				Maxipower		Maxipower Cogged	
				Min.	Max.	Min.	Max.
*3V	2.20	1200-3600	2.00 to 4.00	NR	NR	2.8	4.1
	2.35- 2.50	1200-3600		NR	NR	3.2	4.7
	2.65- 2.80	1200-3600		3.2	4.7	3.5	5.1
	3.00- 3.15	1200-3600		3.6	5.3	3.8	5.5
	3.35- 3.65	1200-3600		4.1	5.9	4.1	6.0
	4.12- 5.00	900-3600		4.7	6.8	4.8	7.1
	5.30- 6.90	900-3600		5.2	7.6	5.8	8.6
*5V	4.40- 4.65	1200-3600	2.00 to 4.00	NR	NR	9.0	13
	4.90- 5.50	1200-3600		NR	NR	10	15
	5.90- 6.70	1200-3600		NR	NR	11	17
	7.10- 8.00	600-1800		11	17	13	19
	8.50-10.90	600-1800		13	19	14	20
	11.80-16.00	400-1200		15	22	15	23
*8V	12.50-17.00	600-1200	2.00 to 4.00	31	45	—	—
	18.00-24.00	400- 900		36	53	—	—

NR—Not Recommended

*For Maxipower Banded Belts, multiply the force in the table by the number of belts in the band.

Taut and Sagging Belt Lengths

Do not be alarmed by differences in belt sag. A very small variation in the lengths of belts can result in relatively large differences in the sag on the slack side.

The table below shows the difference in length between a belt which is tight and a belt which sags on the same drive. This length is the distance between tangent points of the sheaves. Values are for 180° arc of contact on both sheaves and would vary slightly for other ratios.

Example: A belt on a drive with 50-inch centers which sags 2 inches below a tight belt is actually only .213 inches longer between the tangent points. On a drive with 100-inch centers, a belt sagging 2 inches would only be .107 inches longer between tangent points.

Belt Sag Length Table

SAG (Inches)	CENTER DISTANCE (Inches)								
	10	20	30	40	50	75	100	200	300
½	.067	.033	.022	.017	.013	.009	.007	.....	.....
1	.267	.133	.088	.067	.053	.036	.027	.013	.....
2	1.067	.533	.356	.267	.213	.142	.107	.053	.036
3	.....	1.200	.800	.600	.480	.320	.240	.120	.080
4	.....	.....	1.422	1.067	.853	.569	.427	.213	.142
5	.....	.....	.....	1.667	1.333	.889	.667	.333	.222
6	.....	.....	.....	.....	1.920	1.280	.960	.480	.320
8	.....	.....	.....	.....	.....	2.276	1.706	.853	.539
10	.....	.....	.....	.....	.....	.....	2.667	1.333	.889
15	.....	.....	.....	.....	.....	.....	.....	3.000	2.000

IT IS IMPORTANT TO RETENSION A DRIVE THE FIRST 24 HOURS OF INSTALLATION.

V-Drive Inspection and Maintenance Procedures

Well designed and properly installed V-belt drives are the most reliable, trouble-free means of power transmission available. In general, except for an occasional retensioning, they will run year in and year out without maintenance.

However, some do require periodic inspection and maintenance, both while the drive is running and while it is stationary.

Inspection While Running

A noisy V-belt drive indicates the need for attention.

V-drive noise can be caused by the slapping of belts against the drive guard or other obstruction. Check for an improperly installed guard, loose belts or excessive vibration. Squealing of belts as a drive is started or while it is running is usually caused by a poorly tensioned drive and/or by a build-up of foreign material in the sheave grooves. But it can also be caused by oil or grease between the belt and the sheave groove.

If necessary, remove the belt guard and watch the drive while it is running under load. **Caution—safety precautions should be given upper most consideration while guard is removed. Observe only; stand clear of the running drive.** Much can be learned by watching the action of the slack side of the drive. Each variation in the drive load causes a corresponding change in the tension of the slack side of the belt. During across-the-line starts or suddenly applied loads while running, the sag on the slack side of the drive will increase. If the sag under these conditions is excessive, tension should be increased.

Any vibration in a system will cause the slack side of the belts to dance up and down. Excessive vibration will also induce a vibration in the tight side of the drive. The cause of the vibration should be determined and corrected.

If a set of belts is perfectly matched, all belts will have the same amount of sag. However, perfection is a rare thing and there will usually exist some difference in sag from belt to belt. It is more important to look at the tight side of a drive to be sure that all of the belts are running tight. If one or more belts are running loose, the drive needs to be retensioned, or the belts replaced with a matched set.

The above conditions could also be caused by uneven wear of the grooves in the sheave.

These should be checked with sheave groove gauges which are available (see pg. 7) from your Thermoid distributor.

Inspect Sheaves Often

Prime Mover A, B, C, D and E section V-belts should ride in standard sheave grooves so that the top surface of the belt is just above the highest point of the sheave. In A-B combination grooves, an A section belt will ride slightly low in the groove, while a B belt will be in the normal position. In special deep groove sheaves, belts will ride below the top of the sheave. Maxipower™ belts are purposely designed so that the top of the belt will ride above the O.D. of the sheave.

Keep all sheave grooves smooth and uniform. Burrs and rough spots along the sheave rim can damage belts. Dust, oil and other foreign matter can lead to pitting and rust and should be avoided as much as possible. If sheave sidewalls are permitted to "dish out," as shown in the picture below, the bottom "shoulder" ruins belts quickly by chewing off their bottom corners. Also, the belt's wedging action is reduced and it loses its gripping power. The sheave must be replaced immediately.

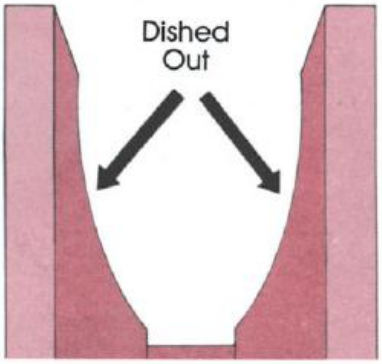

To check sheave grooves for wear, simply select the proper gauge and template for the sheave diameter; then insert the gauge in the groove until the rim of the gauge butts against the outside diameter of the sheave flange. Worn grooves will show up as illustrated above. If 1/32 inch of wear can be seen, poor V-belt life may be expected.

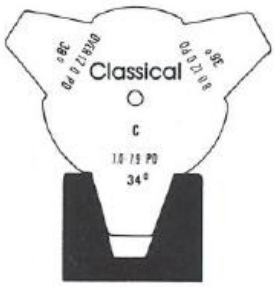

Groove Gauge.

A shiny groove bottom indicates that either the sheave, the belt or both are badly worn and the belt is bottoming in the groove. Once again the belt will lose its wedging action, slip and or burn. Replace either or both belts and worn sheaves.

Badly worn grooves also cause one or more belts to ride lower than the rest of the belts, and the effect is the same as with mismatched belts. This is called "differential driving." The belts riding high in the grooves travel faster than the belts riding low. In a drive under proper tension, a sure sign of differential driving is when, one or several belts on the tight side are slack.

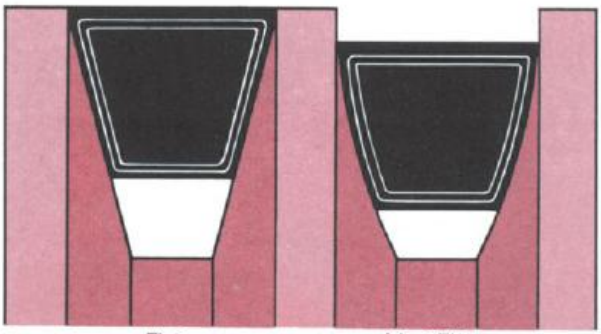

This Not This

Along with the sheave groove gauges are two V gauges for identifying unknown Prime Mover and Maxipower™ belt cross sections. These gauges are used by placing the unknown belt in the various gauges until a proper fit is obtained. The correct cross section will be identified when the **TOP** of the belt is at a line on the face of the gauge. Illustrated in the gauge is a 8V section Maxipower belt.

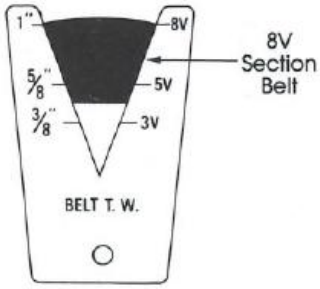

Check Drive Alignment

Sheaves that are not aligned properly cause excessive belt and sheave wear. When the shafts are not parallel, belts on one side are drawn tighter and pull more than their share of the load. These over-loaded belts wear out faster, reducing the service life of the entire set. If the misalignment is between the sheaves themselves, belts will enter and leave the grooves at an angle, causing excessive cover and sheave wear and premature failure. See pages 10 and 11 for complete information on drive alignment.

Keep Belts Clean

Dirt and grease reduce belt life. Belts should be wiped with a dry cloth occassionally to remove any build-up of foreign material. If the belts have been splattered with grease and/or oil, clean them with a safe solvent or soap and water. Flammable or toxic cleaners are to be avoided as a matter of safety.

Although all Thermoid V-belts are of oil resistant construction, an occasional cleaning will help to prolong their life.

Under no circumstances is the use of belt dressing recommended on a V-belt. It is much better to keep the belts and grooves of the drive cleans.

Use Belt Guards

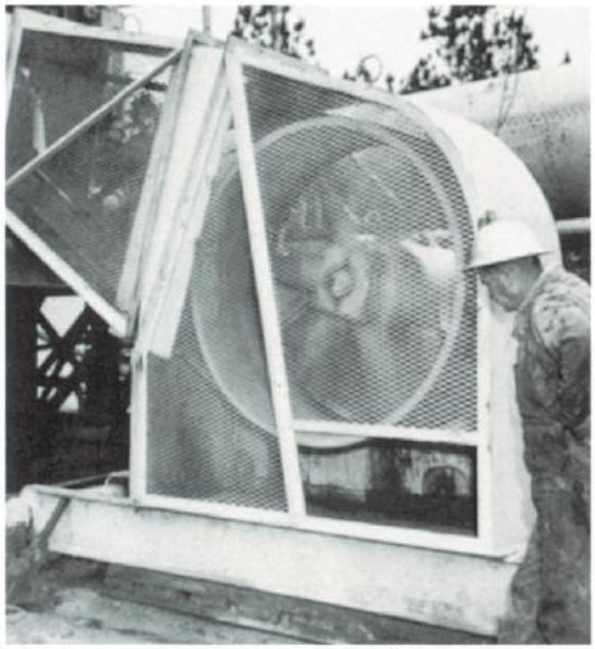

Belt guards protect personnel and the drive itself. They should be definitely used in abrasive atmospheres to protect the drive from sand, metal chips and other foreign matter. But they should be ventilated to avoid excessive heat.

Check them periodically for damage and for loose or missing mounting bolts. These could cause the belts to come in contact with the guard and cause failure.

Guards alone will generally protect belts from abrasion. But where abrasive materials are common, in rock processing machinery, grinders, foundries, etc., drives should be inspected frequently for excessive belt and groove wear.

Check For Hot Bearings

When the drive has been stopped for inspection, check the bearings to make sure they are not running hot. If they are, it could be improper lubrication or improper drive tension. Hot bearings can be caused by belts that are either too tight or too loose. Check the tension carefully using the instruction previously furnished.

If the belts are slipping on your drive, retension the drive. Never use belt dressing to correct slipping belts.

Maintain Proper Belt Tension

Maintaining correct tension (see pages 12 and 13) is the most important rule of V-belt care for increased belt life.

Belts that are too loose will slip, causing excessive belt and sheave wear. V-belts that sag too much are snapped tight suddenly when the motor starts or when peak loads occur. That snapping action can actually break the belts, because the added stress is more than the belt was designed to take. This can be demonstrated with a piece of string, as illustrated.

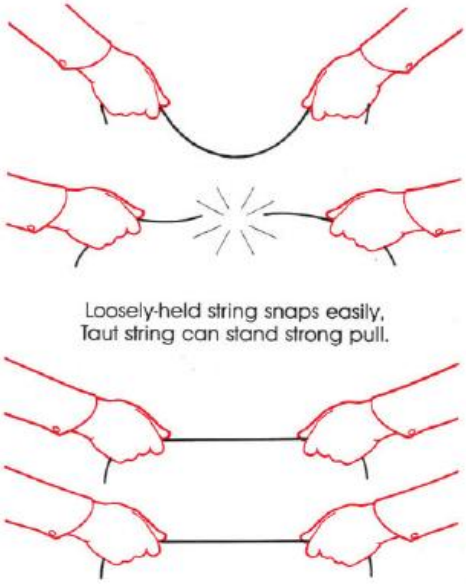

Loosely-held string snaps easily,
Taut string can stand strong pull.

V-Belt Trouble Shooting

Trouble	Cause	To Correct
Belts slip (shiny sheave grooves and/or burns on belts)	Not enough tension	Increase tension
	Overloaded drive	Redesign drive
Drive squeals	Overloaded drive	Redesign drive
	Not enough arc of contact	Increase center distance
	Heavy starting load	Increase tension
Belt turned over	Broken cord caused by prying on sheave	Replace set of belts correctly
	Overloaded drive	Redesign drive
	Impulse loads	Apply proper tension
	Misalignment of sheave & shaft	Realign drive
	Worn sheave grooves	Replace sheaves
	Flat idler sheave	Align idler; Re-position on slack side of drive close to drive sheave
	Excessive belt vibration	Check drive design. Check equipment for solid mounting. Consider use of banded belts
	Foreign objects in drive	Provide drive shroud
Excessive belt whip	Mismatched belts and/or new belts installed with old belts	Replace belts in matched sets only
	Sheave grooves worn unevenly; Improper groove angle. Give appearance of mismatched belts	Replace sheaves
	Sheave shafts not parallel. Give appearance of mismatched belts	Align drive
	Not enough drive tension	Apply proper tension
Belt breaks	Shock loads	Apply proper tension; Recheck drive
	Heavy starting loads	Apply proper tension; Recheck drive. Use compensator starting
	Belt pried over sheaves	Replace and install set of belts correctly
	Foreign objects in drive	Provide drive shroud

Rapid Belt Failure

Belt cover wears rapidly	Sheave grooves worn	Replace sheaves
Belt bottom transverse cracking	Sheave diameter too small	Redesign drive
Excessive belt whip	Mismatched belts	Replace with matched belts
Excess belt stretch & breakage	Drive overloaded	Redesign drive
Slip burns—shiny sheave grooves	Belt slips	Increase tension
Belt hard & cracked	Heat condition	Ventilate drive Check tension
Belt sticky—soft	Oil condition	Eliminate oil

How to Diagnose V-Belt Failure

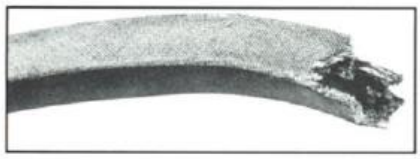

Snub Break

Cause
Cover wear indicates slip. Clean break reveals sudden snap.

Prevention
Maintain proper tension on the drive.

Distorted Belt

Cause
Breakdown of adhesion or broken cords.

Prevention
Do not pry belts on drives. Check sheaves to recommended diameters.

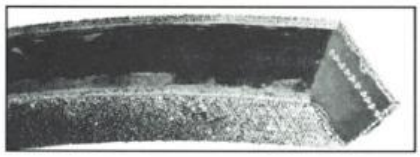

Abrasion

Cause
Foreign material and rust in sheaves wore away sidewalls, letting belt drop to bottom of groove.

Prevention
Dust guards help protect against abrasion. Tension must be maintained in dusty atmospheres.

Oil Deterioration

Cause
Oil-softened rubber.

Prevention
Splash guards will protect drives against oil. Although Prime Mover belts are oil resisting, excessive oil can cause some deterioration.

Cover Fabric Rupture

Cause
Cover fabric ruptured when belt was pried over sheave during installation.

Prevention
Proper installation of belts by moving motor so belts do not have to be pried into the grooves.

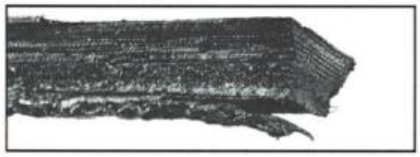

Slip Burn

Cause
Belt too loose. Belt didn't move, friction against sheave burned rubber. When belt finally grabbed, it snapped.

Prevention
Maintain proper tension on the drive.

Base Cracking

Cause
Severe back-bend idlers. Improper storage. Excessive ambient operating temperature.

Prevention
Check storage conditions. If back-bend idler cannot be avoided, install idler for larger diameter. Avoid ambient temperature over 140°.

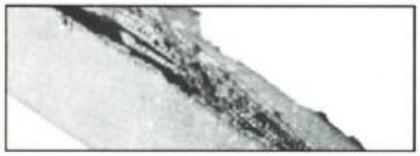

Ply Separation

Cause
Split along pitch line indicating belt ran over too small a sheave.

Prevention
Redesign drive using sheaves of proper size.

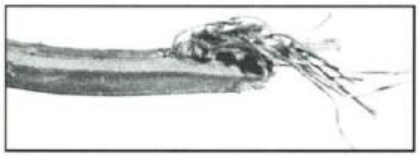

Rupture

Cause
Ruptured cords in the plies.

Prevention
Check for rocks or tools falling into sheave grooves. Check tension. Belts loose enough to twist in groove can rupture cords.

Worn Belt Sides

Cause
Misalignment. Grit or dirt. Normal wear.

Prevention
Align sheaves. Replace belts as required.

Timing Belt Tensioning and Trouble Shooting

Tensioning Timing Belts

Standard, Metric and curvilinear synchronous (8mm, 14mm) timing belts should be installed to fit pulleys snugly, neither too tight nor too loose. The belt's positive grip eliminates the need for high initial tension. When a belt is installed with a snug but not overly tight fit, longer belt life, less bearing wear and more quiet operation will result. Overtight belts can cause early failure and should be avoided. With high torque a loose belt may 'jump teeth' upon startup. If such occurs, the tension should be increased gradually until satisfactory operation is achieved.

To properly tension a timing belt, place belt on pulleys and adjust takeup until the belt teeth mesh securely with the pulley grooves. Measure belt span, (see sketch on page 13). Then tighten belt so that it deflects 1/64th-inch for every inch of belt span when a force as specified in the table below is applied to the top of the belt. For belts wider than two inches, a metal or wooden strip 3/4 to 1-inch wide should be placed across the belt between it and the tester to prevent distortion.

The following range of deflection forces are normally adequate for drive installation. Actual installation tension required depends on peak loads, system rigidity, number of teeth in mesh, etc.

Timing Belt Tensioning Table

Belt Pitch	Belt Width	Deflection Force
8MM (8mm)	20mm	2 to 4 lbs.
	30mm	3 to 6 lbs.
	50mm	7 to 11 lbs.
	85mm	11 to 19 lbs.
14MM (14mm)	40mm	5 to 11 lbs.
	55mm	8 to 17 lbs.
	85mm	14 to 27 lbs.
	115mm	20 to 40 lbs.
	170mm	30 to 60 lbs.
MXL (.080-in.)	1/8-inch	1 oz.
	3/16-inch	1-1-1/2 oz.
	1/4-inch	2 oz.
	5/16-inch	2-2-1/2 oz.
XL (1/5-in.)	1/4-inch	2-1/2 oz.
	5/16-inch	3 oz.
	3/8-inch	3-1/2 oz.

Belt Pitch	Belt Width	Deflection Force
L (3/8-in.)	1/2-inch	7 oz.
	3/4-inch	11 oz.
	1-inch	1 lb.
H (1/2-in.)	3/4-inch	2 lbs.
	1-inch	2-1/2 lbs.
	1-1/2-inch	4 lbs.
	2-inch	5-1/2 lbs.
	3-inch	8-1/2 lbs.
XH (7/8-in.)	2-inch	7-1/2 lbs.
	3-inch	11-1/2 lbs.
	4-inch	16-1/2 lbs.
XXH (1-1/4-in.)	2-inch	9 lbs.
	3-inch	14 lbs.
	4-inch	20 lbs.
	5-inch	26 lbs.

Timing Belt Trouble Shooting

TROUBLE	CAUSE	TO CORRECT
Tooth shear	Less than 6 teeth in mesh. Excessive load. Shock load.	Redesign drive. Use wider belt. Redesign drive.
Tensile break	Foreign material in drive. Excessive load. Shock load. Diameter of pulley below minimum. Belt crimped in storage.	Protect the drive. Redesign drive. Redesign drive. Use larger pulleys. Do not crimp.
Tooth wear uniform	Incorrect tension. Worn pulley. Incorrect pulley profile.	Correct tension. Replace pulley. Replace pulley.
Tooth wear one edge	Misalignment. Worn pulley.	Correct alignment. Replace pulley.
Belt edge wear	Misalignment. Defective flange.	Correct alignment. Replace or repair flange.
Cracks in back of belt	Pulley diameter below minimum or backside idler. Excessive low or high temperature or exposure to solvents or chemicals.	Redesign drive. Control environment.
Vibration	Pulley run out. Excessive tension. Belt to pulley pitch mismatch.	Check pulley-bushing and shaft. Correct tension. Use only correct profile.

Mounting and dismounting

Bearing storage

Before leaving the factory, SKF spherical roller bearings are treated with a corrosion inhibitor. They can be stored in their unopened original packages for up to five years (three years for sealed bearings), provided the relative humidity in the store does not exceed 60 % (➔ **fig 1**).

To avoid the risk of contamination and corrosion, the original packages should not be opened until immediately before mounting the bearing.

Mounting

Skill and cleanliness are essential when mounting bearings, to make sure that they perform satisfactorily and attain their full potential. Above all, the correct method of mounting should be chosen and suitable tools used. This is particularly important, where sealed SKF spherical roller bearings are concerned, since misalignments of the inner ring relative to the outer ring in excess of 0,5° may damage the seals. For optimum results in mounting and dismounting bearings, SKF offers a full range of tools and equipment. Please refer to the “Related SKF products” section on **page 58**.

Bearings with cylindrical bore
When mounting bearings with cylindrical bore, the ring with the tighter fit is normally mounted first.

The force required to mount a bearing increases according to the bearing size. Therefore, it is not always possible to press large bearings onto a cylindrical shaft or into a housing in the cold state. In this case, either the inner ring or the housing should be expanded by heating before mounting.

To mount with an interference fit on a shaft the bearing should be heated to some 80 to 90 °C (180 to 200 °F) above the temperature of the shaft. Please remember that sealed bearings should never be heated to more than 110 °C (230 °F).

The use of an SKF induction heater has been found very advantageous (➔ **fig 2**). It heats the bearing rapidly, and a bult-in thermostat prevents bearing damage caused by overheating. Non-metallic components such as seals remain cold, as does the heater itself.

Mounting bearings by cooling the shaft or the bearing is not recommended, as the very low temperatures required inevitably cause condensation, thus creating a risk of corrosion.

Correct storage of bearings

Fig 1

SKF induction heater

Fig 2

Bearings with tapered bore
Bearings with tapered bore are always mounted with an interference on the shaft. They can be mounted on adapter or withdrawal sleeves or directly on to tapered journals.

When dimensioning a tapered journal, the distance between the centre of the bearing in its final mounted position and a reference face on the shaft should be used as a basis (➔ **fig** 3). When the dimension B_a has been established, the dimensioning of the journal should be continued as described in SKF catalogue 4003 “Large bearings”.

Spherical roller bearings up to 200 mm bore diameter may be driven up on to a tapered journal or a withdrawal sleeve using a shaft nut and on to an adapter sleeve using the sleeve nut and a spanner (➔ **fig** 4).

The application of the high drive-up forces required by larger bearings can be facilitated using the oil injection method (➔ **fig** 5). This necessitates the provision of oil supply ducts in the journals and oil distribution grooves in the seating. Further reduction of the mounting effort can be achieved by using the oil injection method in combination with an SKF hydraulic nut.

For bearings which are to be hot mounted, the final axial position on the seating has to be predetermined by means of, for instance, a tailor-made spacer ring (➔ **fig** 6). When cold, the bearing will obtain its correct interference fit.

Fig 3

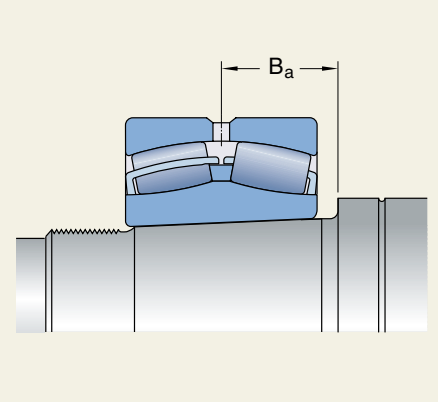

Dimensioning of tapered journals

Fig 4

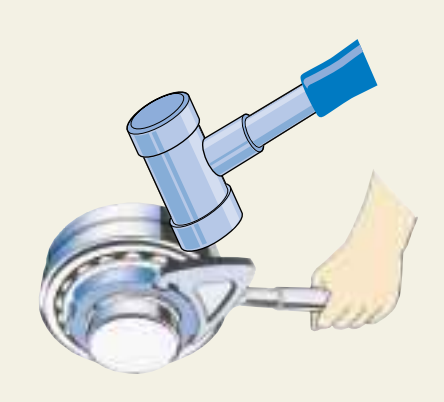

Drive-up of medium size bearing

Drive-up of large size bearing

Fig 5

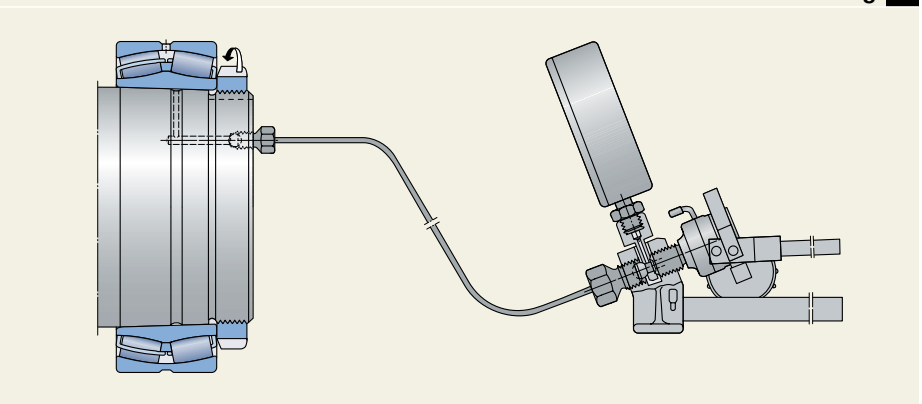

Tailor-made spacer ring used to position the bearing axially

Fig 6

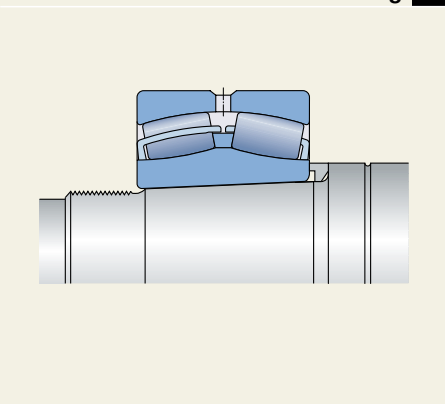

The reduction in radial internal clearance of open bearings or the axial displacement of the inner ring on its tapered seating is used as a measure of the degree of interference (➔ **fig** 7).

To effectively mount sealed bearings with a tapered bore, it is only possible to use the drive-up distance as a measure, and the "SKF drive-up method" is recommended. It allows the starting position of the bearing to be easily and accurately determined by applying a well-defined oil pressure in the hydraulic nut. The correct fit is then achieved by controlling the axial drive-up from this position.

The SKF drive-up method incorporates the use of a new type of hydraulic nut fitted with a dial indicator to control the drive-up and a specially calibrated pressure gauge, mounted on the selected pump (➔ **fig** 8).

Fig 7

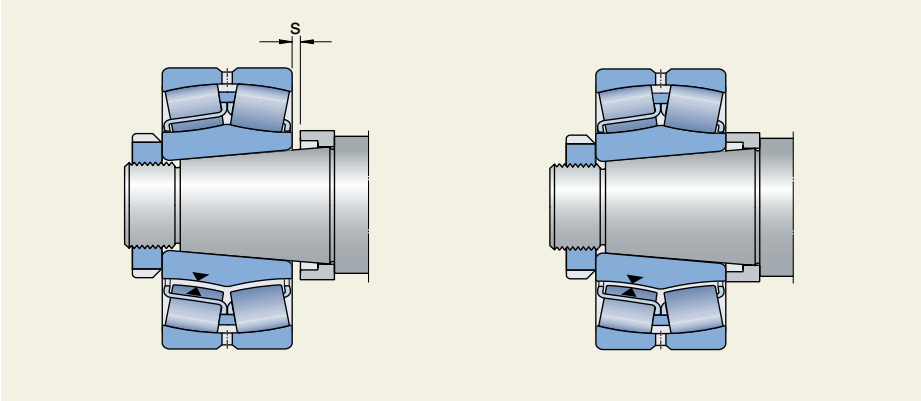

Desired interference obtained by measuring clearance reduction or axial drive-up

Mounting a bearing using the SKF drive-up method

Fig 8

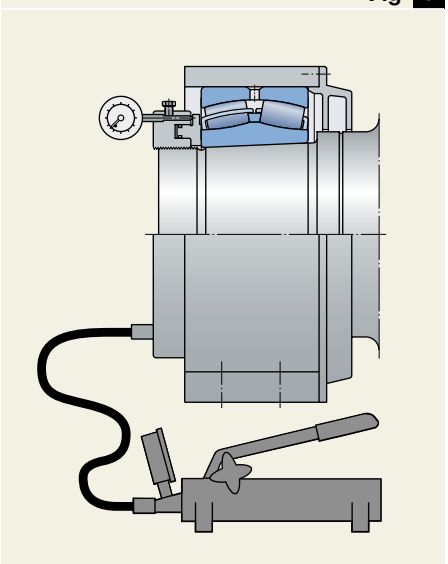

Dismounting a bearing from a cylindrical seat using the oil injection method

Fig 9

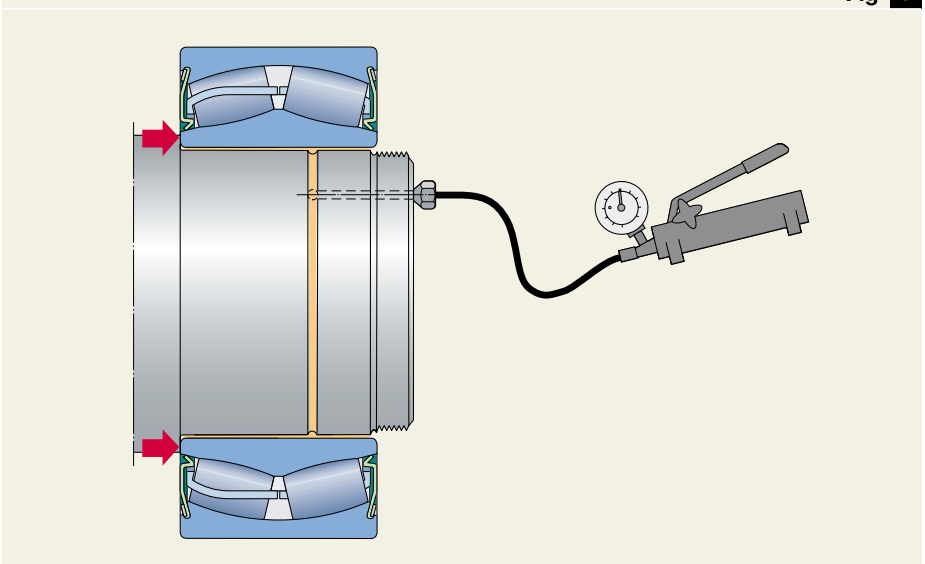

Dismounting

The force required to remove a bearing is generally greater than the mounting force, particularly if, after a long period of service, fretting corrosion is present. If bearings or other associated components are to be re-used after inspection, they must be dismounted as carefully as they were mounted, and the dismounting force should never be applied through the rolling elements.

Bearings with cylindrical bore
Small bearings can generally be removed using a mechanical puller. These withdrawal tools should grip over the rings from the inside or outside and contact the side faces.

Dismounting larger bearings with bore diameters of 80 mm and above with an interference fit on the shaft is considerably eased, if the SKF oil injection method is used (➔ **fig** 9).

Bearings with tapered bore
To remove spherical roller bearings from tapered journals, the oil injection method is recommended (➔ **fig** 10). The film of pressurised oil separates the two mating surfaces and makes the bearing slide off easily.

Bearings mounted on adapter or withdrawal sleeves are most easily removed using a hydraulic nut (➔ **fig** 11). By using sleeves with oil ducts and oil distribution grooves, the oil injection method easily facilitates the removal of large bearings (➔ **fig** 12).

Safety note
To avoid damage or accidents when dismounting bearings from tapered seatings using the oil injection method, always make sure that the bearing is blocked at the shaft end, e.g. by a lock nut, to prevent it from falling off.

See also SKF publication 4100 "SKF Bearing Maintenance Handbook".

Fig 10

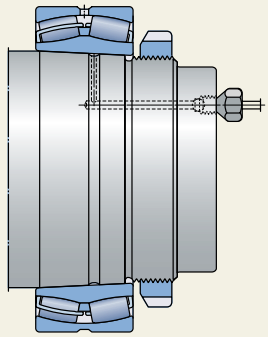

Dismounting a bearing from a tapered journal using the SKF oil injection method

Dismounting bearings on adapter and withdrawal sleeves with hydraulic nuts

Fig 11

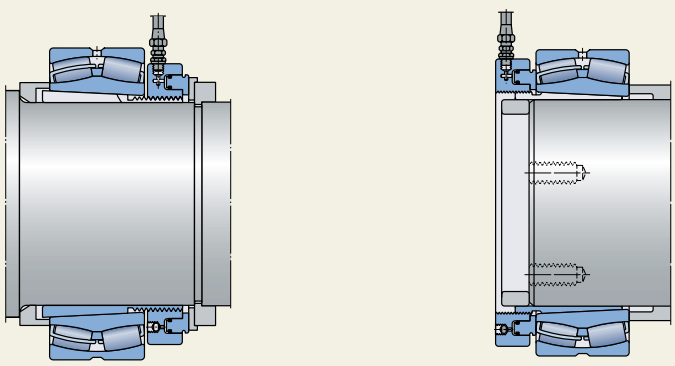

Dismounting a large size bearing on withdrawal sleeve with oil ducts and grooves

Fig 12

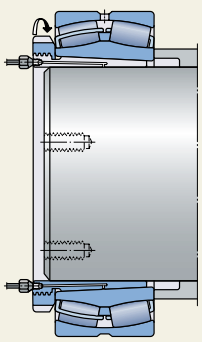

Lubrication and maintenance

Oil lubrication

For oil lubrication of spherical roller bearings, oil bath and circulating oil lubrication are the two main options.

Oil bath

This is the most simple method of oil lubrication (➔ **fig** 1). The oil, which is picked up by the rotating components of the bearing, is distributed within the bearing and then flows back to the oil bath.

The oil level should be such that it almost reaches the centre of the lowest roller when the bearing is stationary. The speed ratings for oil lubrication given in the product tables apply to this method of lubrication. Even under optimum operating conditions, the oil must be changed at least once a year.

Circulating oil

In the circulating system, the oil can be continuously filtered and/or cooled (➔ **fig** 2). This significantly increases the service life of the oil, helping to avoid frequent oil changes.

The circulation can be produced by a pump. Adequately dimensioned ducts must allow the oil to leave the arrangement after passing through the bearing.

An intermediate form of oil lubrication is one where the oil is splashed up from the oil bath by other components, e.g. gears in a gearbox.

Fig 1

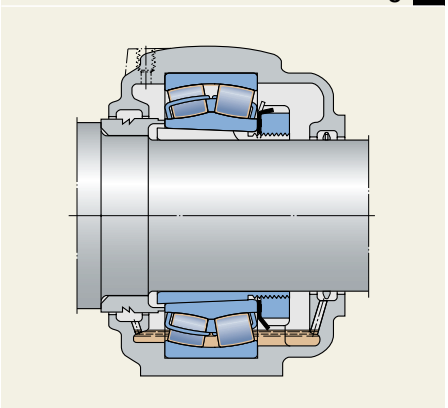

Spherical roller bearing application lubricated by oil bath

Spherical roller bearing application lubricated by circulating oil

Fig 2

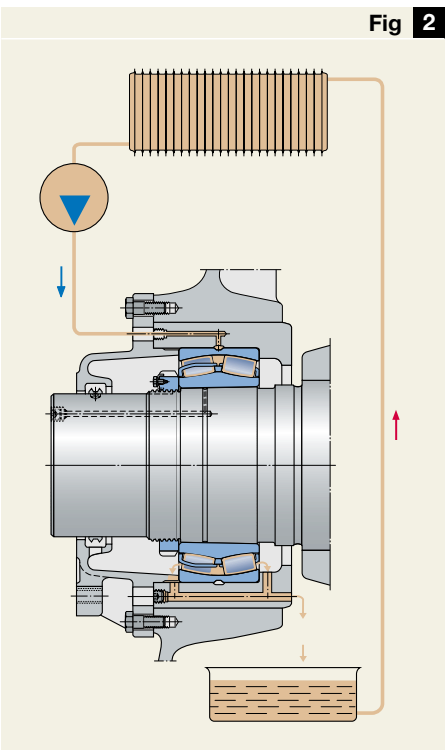

Grease lubrication

Today's modern greases allow an increasing number of maintenance-free bearing applications which are lubricated for life. Here, the selection of sealed SKF spherical roller bearings is the optimum choice, both technically and economically. These bearings are filled with the SKF lithium base grease LGEP 2 before leaving the factory (➔ **Table** 1) and are ready to mount and operate.

In cases where the operating conditions are so harsh that very frequent relubrication is needed or where sealed SKF spherical roller bearings are not available, SKF offers a full range of greases and tools to enable proper lubrication of the bearing (➔ section "Lubricants and lubrication equipment" on **page 60**).

Relubrication

It is only possible to determine the time at which relubrication is required based on statistics. The definition used by SKF for the recommendations regarding relubrication intervals relates to a time at which 99 % of the bearings are still reliably lubricated, i.e. they correspond to an L_1 grease life which is the relubrication interval t_f. The L_{10} grease life is approximately twice the L_1 life.

If the L_{10} grease life corresponds to, or exceeds, the L_{10} life of the bearing, the bearing may be considered as being lubricated for life, and relubrication will not be required.

The following recommendations are based on the results of long-term tests in various applications. They do not apply where water and/or particulate contaminants can penetrate the bearing arrangement. In such cases it is advisable to replenish or renew the grease fill in the arrangement more frequently to remove moisture or other contaminants.

Relubrication intervals
Under normal conditions the relubrication interval t_f can be determined from **Diagram 1** based on

- the rotational speed n and
- the bearing bore diameter d.

The diagram is valid for bearings, which are lubricated with a quality lithium base grease, on horizontal shafts in stationary machines where loads are normal and the operating temperature does not exceed the "reference temperature" for the grease; this is usually 70 °C (158 °F).

Lubricating greases age with time and this process is accelerated at elevated temperatures. Therefore, the relubrication interval obtained from the diagram should be halved for every 15 °C (27 °F) above the reference temperature. At temperatures below 70 °C (158 °F), the relubrication interval may be extended.

Where bearings having bore diameters larger than some 300 mm are concerned, the high specific loads mean that adequate lubricant supply to the rolling contacts can only be secured if relubrication is more frequent than suggested by the diagram. For this reason the relevant curves are shown as dashed lines. In such cases continuous relubrication is recommended.

Diagram 1

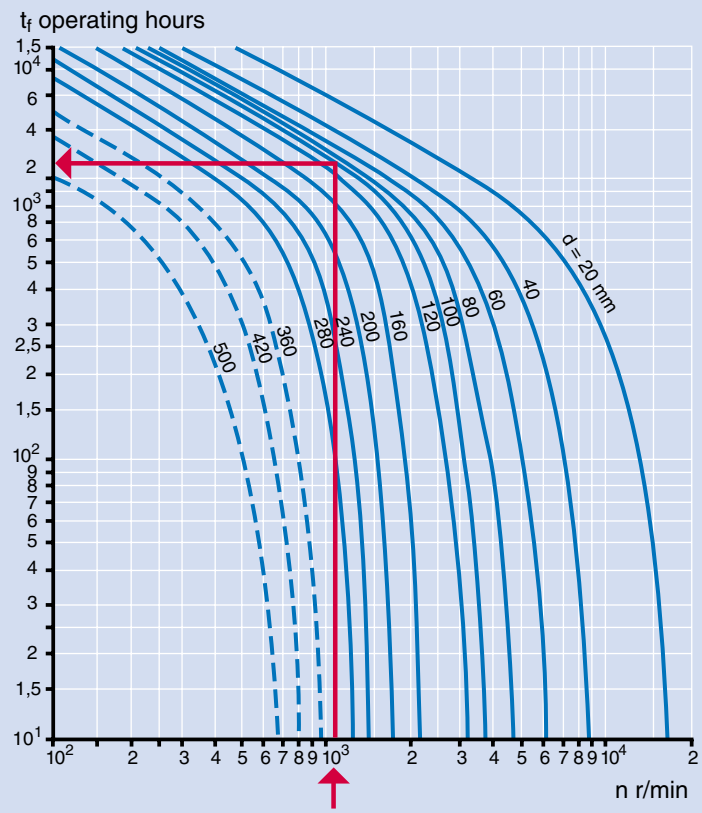

Example
A spherical roller bearing with a bore diameter (d) of 100 mm rotates at 1 000 r/min. The operating temperature varies between 60 and 70 °C (140 to 158 °F). What is the correct relubrication interval? Follow the line from 10^3 on the speed (x) axis to the intersection of the curve for d = 100 mm. Then follow a line from this intersection horizontally across to the value of t_f which is approximately 2 000. The relubrication interval is therefore 2 000 operating hours.

Relubrication intervals for grease lubricated spherical roller bearings

Technical data for SKF grease LGEP 2

Table 1

Property	SKF grease LGEP 2
Consistency (NLGI Scale)	2
Soap base	lithium
Colour	light brown
Base oil	mineral
Operating temperature range, °C (°F)	–20 to +110 (–4 to +230)
Reference temperature, °C (°F)	60 (140)
Dropping point to ISO 2176, °C (°F)	min. 180 (356)
Kinematic viscosity of base oil at 40 °C, mm^2/s	200
at 100 °C, mm^2/s	16

See also "SKF Interactive Engineering Catalogue" or SKF "General Catalogue".

Grease quantity for periodic relubrication
If the relubrication interval is less than 6 months, it is recommended to replenish the grease fill in the bearing arrangement at intervals corresponding to 0,5 t_f. The complete grease fill should be replaced after three replenishments.

Suitable quantities to be added for open bearings can be obtained from

$G_p = 0{,}005\ D\ B$

and for sealed bearings from

$G_p = 0{,}0015\ D\ B$

where
G_p = grease quantity to be added when replenishing, g
D = bearing outside diameter, mm
B = total bearing width, mm

The bearing must rotate during relubrication to achieve proper distribution of the grease.

Grease quantity for continuous relubrication
The grease quantity to be continuously supplied can be obtained from

$G_k = (0{,}3 \ldots 0{,}5)\ D\ B \times 10^{-4}$

where
G_k = grease quantity to be continuously supplied, g/h
D = bearing outside diameter, mm
B = total bearing width, mm

Continuous relubrication can be efficiently achieved using the SKF SYSTEM 24 lubricator.

Relubrication of sealed SKF spherical roller bearings
The sealed spherical roller bearings shown in the product tables (**page 54** onwards) have an annular groove and three lubrication holes as standard. To prevent moisture from penetrating and to retain the grease in the bearing a polymer band in the groove covers the lubrication holes (**➔ fig** 3).

If it is anticipated that bearing relubrication will be necessary during operation, the band should be removed before the bearing is mounted. When relubricating, grease should be slowly pressed into the bearing as it rotates until fresh grease emerges from the sealing lips. Excess pressure should be avoided to prevent seal damage.

A polymer band in the annular groove covers the lubrication holes in the outer ring of sealed bearings

Fig 3

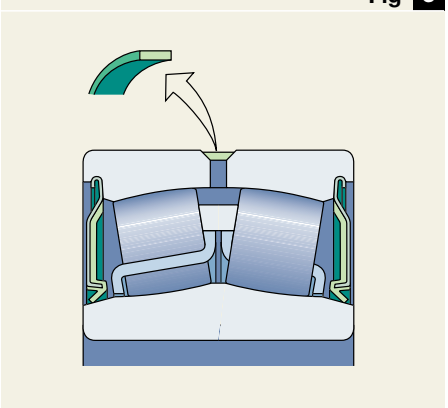

Retaining rings hold the seals in the outer ring

Fig 4

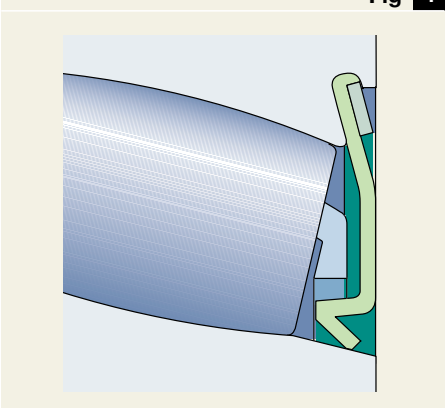

Maintenance

The seals of SKF spherical roller bearings with a bore diameter of 110 mm and above are secured by retaining rings inserted in the outer ring (➔ **fig** 4). The seals can be removed from the bearing so that the bearing can be inspected, washed and regreased, after which the seals can be reinserted and secured. To avoid damage to the seals, this work has to be done with care, using suitable, well rounded tools with no sharp edges.

1. Remove the retaining ring by inserting a tool under the recessed end of the retaining ring (➔ **fig** 5) and pushing it out of the groove.
2. Remove the second retaining ring as above.
3. Swivel out the inner ring, so that the seals are pushed out by the rollers.
4. The bearing, seals and retaining rings can now be washed
5. Inspect the parts for further usability.
6. Regrease the bearing with inner ring swivelled out.
7. Align the bearing and put it on a clean surface for remounting the seals.
8. Insert the seal as far as possible into its groove in the outer ring. Hold down the already inserted part of the seal with one hand, and press in the remainder, stepwise with the thumb of the other hand (➔ **fig** 6).
9. Mount the retaining ring by inserting the rectangular end first. Holding this part down, press in the remainder stepwise with a tool, until the whole retaining ring properly contacts the seal as shown in **fig** 4.
10. Mount the second seal according to steps 7 to 9.
11. If the bearing is not immediately re-used, preserve the bearing surfaces with oil and make sure that the bearing is well packed.

Removing a retaining ring

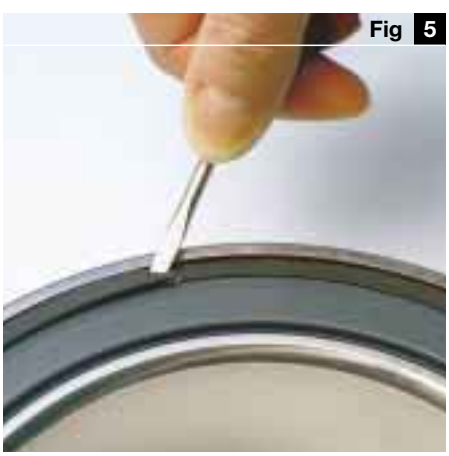

Fig 5

Inserting the seal in the outer ring

Fig 6

ELECON EPC PROJECTS LIMITED

LUBRICATION SYSTEM

PRODUCED BY AN AUTODESK EDUCATIONAL PRODUCT

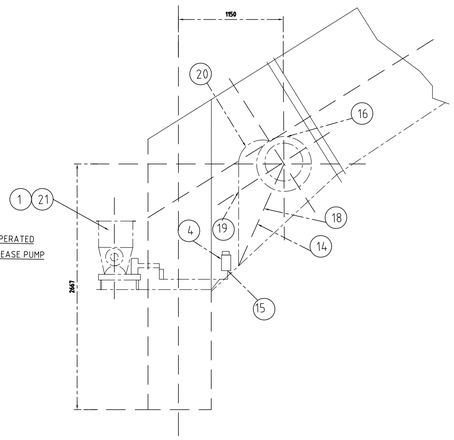

ELEVATION

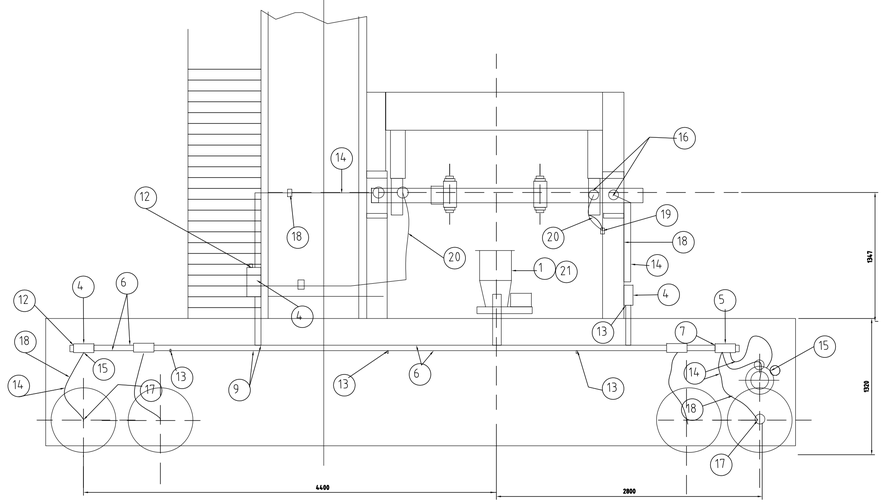

VIEW ON A-A

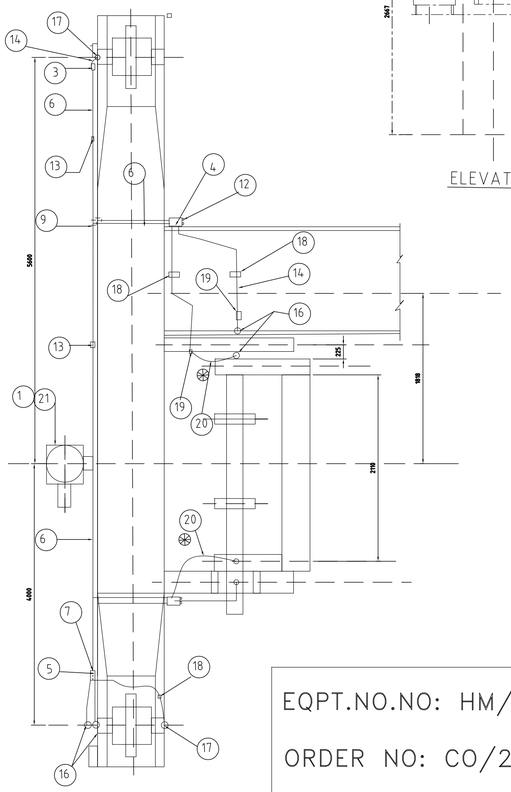

PLAN

EQPT.NO.NO: HM/545 & HM/573-74-75

ORDER NO: CO/2223 & CO/2281

WEIGHT : 300 KGS [APPROX]

SR.NO.	DESCRIPTION (LUBRICATION)	QTY.	SIZE
1.	TRAVEL WHEEL	8 NOS.	1/4" BSP (ELBOW)
2.	TRAVEL DRIVE	1 NO.	1/4" BSP (STRAIGHT)
3.	MAIN BOOM DRIVE SHAFT PIVOT BLOCK	2 NOS.	1/8" BSP (STRAIGHT)
4.	MAIN BOOM DRIVE SHAFT COVER FOR BRG. HOUSING	2 NOS.	1/8" BSP (STRAIGHT)

NOTE:

1. TOTAL 13 NOS OF LUBRICATION POINTS
2. CONNECTION SIZES OF LUBRICATION POINTS ARE AS PER TABLE SHOWN
3. PIPES FROM PUMP TO DOSE FEEDERS ARE 18 MM OD SEAMLESS STEEL PIPE
4. ALL PIPES AFTER DOSE FEEDER ARE 10 mm OD STEEL TUBE
5. MKD SHOWN THUS ⊛ ARE HOSE PIPE
6. ALL FITTINGS ARE FERRULE TYPE
7. NECESSARY PIPE CUTTING AND BENDING TO BE DONE AT SITE TO SUIT STRUCTURE OF MACHINE
8. ALL PIPE CLAMP, DOSE FEEDER AND PUMP MOUNTING PAD TO BE SITE WELDED
9. TO REFER WITH ELECON DRG. NO. HL 2048 / 1
10. FOR BOM REFER SPEC SHEET NO:1660-02 REV-1

PUMP PART LIST

1.1	BASE PLATE
1.2	ELECTRIC MOTOR FRAME SIZE 90L
1.3	LOVEJOY COUPLING
1.4	AUTOMATIC GREASE PUMP
1.5	HYDRAULIC DISTRIBUTOR VALVE
1.6	RESERVOIR
1.7	TELL-TALE ROD
1.8	LIMIT SWITCH LEVER TYPE MODEL NO.JLSL-2
1.9	FILLING PLUG

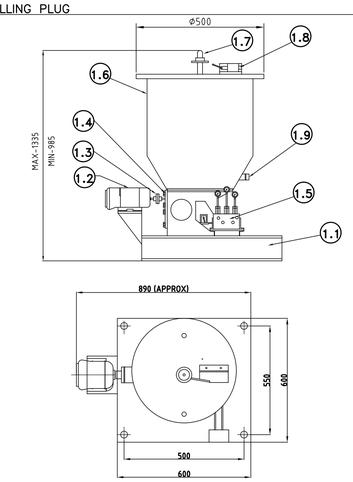

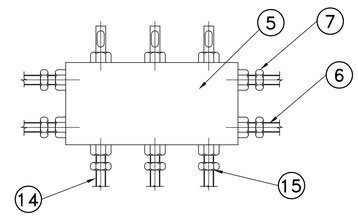

3 OUTLET DOSE FEEDER DTL. DF-31

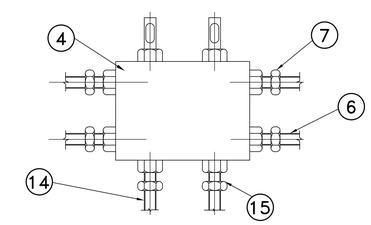

2 OUTLET DOSE FEEDER DTL. DF-21

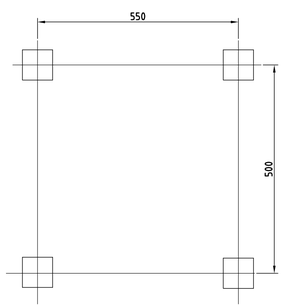

PUMP FOUNDATION DETAILS

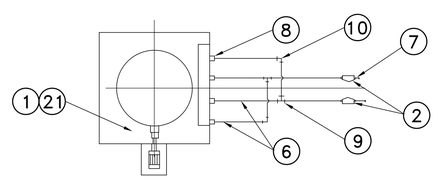

PUMP CONNECTION DETAILS

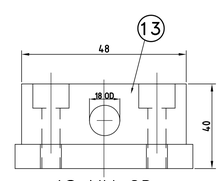

18 MM OD

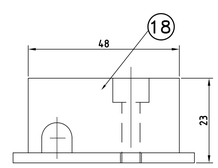

10 MM OD

PIPE CLAMP FIXING DETAILS

IFFCO INDIAN FARMERS FERTILISER CO-OP. LTD. PARADEEP

INDIAN FARMERS FERTILISER COOPERATIVE LIMITED.
(PARADEEP UNIT)
VIII - MUSADIA, PARADEEP
DIST. - JAGATSINGHPUR, ORISSA
PIN CODE : 754 142 (INDIA)

LUB SYSTEMS
CHENNAI 600 028.

CUSTOMER :
M/S.ELECON ENGINEERING COMPANY LIMITED
VALLABH VIDYANAGAR, GUJARAT STATE.

PROJECT :
IFFCO PARADEEP

TITLE: MOTORISED GREASE LUBRICATION SYSTEM FOR AUXILIARY BOOM SIDE OF SCRAPER RECLAIMER

DRAWN	A.S.B
CHECKED	A.M.R.
APPROVED	R.M.D
DATE	28.09.2012
REV	1

DWG NO.: 1-LS-1660-02

SCALE : N.T.S

REV.	DESCRIPTION	DWN.	CKD.	S.E	APP.	P.M.	DATE.
1.	NO. OF POINTS HAVE BEEN INCREASED FROM 8 TO 13.						28.09.12

PRODUCED BY AN AUTODESK EDUCATIONAL PRODUCT
PRODUCED BY AN AUTODESK EDUCATIONAL PRODUCT
PRODUCED BY AN AUTODESK EDUCATIONAL PRODUCT

LUBSYSTEMS **CHENNAI – 600 028**	MOTORISED GREASE LUBRICATION SYSTEM FOR MAIN BOOM SIDE OF SCRAPER RECLAIMER		SPEC NO : **1660-02** REV – 1 SHT 1/2
	CUSTOMER : **M/S ELECON ENGG. CO. LTD**	**PROJECT :** **IFFCO-PARADEEP**	ELECON DRG NO. **HL 2048 / 1**
			ORDER NO.**CO/2223** M/C NO.**HM / 545**

S.NO	DESCRIPTION	QTY	MAKE
1	MOTORISED DUAL LINE GREASE PUMP WITH 50 LITS. CONTAINER, HEAVY FOLLOWER PLATE AND TELL TALE ROD WITH LOW LEVEL LIMIT SWITCH. THE PUMP WILL HAVE A DISCHARGE CAPACITY OF 60CC / MIN & A WORKING PRESSURE OF 150 KGS/SQ.CM [MAX]. THE PUMP IS FITTED WITH A 4 – WAY HYDRAULIC DISTRIBUTOR VALVE FOR LINE CHANGE OVER. THE PUMP IS COUPLED TO AN ELECTRIC MOTOR OF 1 HP, 1400 RPM, 3 PHASE, 50C/S, CLASS 'F' INSULATION LIMITED TO CLASS'B, TEFC, IP-55 PROTECTION. MOC : C.I. /STEEL	01 NO	PUMP LUBSYSTEMS MOTOR KEC
2	IN-LINE GREASE FILTER 3/8" BSP. MOC C.I. / STEEL	02 NOS	LUBSYSTEMS
3	N0T USED	-	
4	2-OUTLET DOSE FEEDER HAVING A DISCHARGE CAPACITY OF 0.5 TO 2.0 CC OF GREASE PER STROKE PER OUTLET. TYPE DF-21. MOC C.I. /STEEL	05 NOS	LUBSYSTEMS
5	3-OUTLET DOSE FEEDER HAVING A DISCHARGE CAPACITY OF 0.5 TO 2.0 CC OF GREASE PER STROKE PER OUTLET . TYPE DF-31. MOC C.I. /STEEL	01 NO	LUBSYSTEMS
6	18 mm OD X 2 mm T SEAMLESS STEEL TUBE MOC STEEL	40 MTS	STD
7	HALF UNION ASSEMBLY SUITABLE FOR 18 mm ODTUBE WITH 3/8" BSP THREAD. MOC : STEEL	20 NOS	LUBSYSTEMS
8	HALF UNION ASSEMBLY SUITABLE FOR 18 mm ODTUBE WITH 1/2" BSP THREAD. MOC : STEEL	04 NOS	LUBSYSTEMS
9	UNION TEE ASSEMBLY SUITABLE FOR 18 mm OD TUBE MOC : STEEL	08 NOS	LUBSYSTEMS
10	ELBOW UNION ASSEMBLY SUITABLE FOR 18 mm OD TUBE MOC : STEEL	08 NOS	LUBSYSTEMS
11	UNION ASSEMBLY SUITABLE FOR 18 MM OD TUBE MOC : STEEL	06 NOS	LUBSYSTEMS
12	3 /8" BSP PLUG MOC : STEEL	10 NOS	LUBSYSTEMS
13	1- WAY CLAMP WITH PAD / SCREW FOR 18 mm OD TUBE MOC : NYLON / STEEL	22 NOS	LUBSYSTEMS
14	10 mm OD X 1 mm T SEAMLESS STEEL TUBE	25 MTS	STD
15	STRAIGHT CONNECTOR SUITABLE FOR 10 mm OD TUBE WITH 1/4" BSP THREADS. MOC : STEEL	14 NOS	LUBSYSTEMS
16	STRAIGHT CONNECTOR SUITABLE FOR 10 mm OD TUBE WITH 1/8" BSP THREADS. MOC : STEEL	04 NOS	LUBSYSTEMS
17	ELBOW CONNECTOR SUITABLE FOR 10 mm OD TUBE WITH 1/4" BSP THREAD. MOC : STEEL	08 NOS	LUBSYSTEMS
18	1-WAY CLAMP WITH PAD / SCREW FOR 10 mm OD TUBE MOC NYLON / STEEL	20 NOS	LUBSYSTEMS

LUBSYSTEMS **CHENNAI – 600 028**	MOTORISED GREASE LUBRICATION SYSTEM FOR MAIN BOOM SIDE OF SCRAPER RECLAIMER		SPEC NO : **1660-02** REV – 1 SHT 2/2
	CUSTOMER : **M/S ELECON ENGG. CO. LTD**	**PROJECT :** **IFFCO-PARADEEP**	ELECON DRG NO. **HL 2048 / 1**
			ORDER NO.**CO/2223** M/C NO.**HM / 545**

S.NO	DESCRIPTION	QTY	MAKE
19	DOUBLE END CONNECTOR SUITABLE FOR 10 mm OD TUBE MOC : STEEL	08 NOS	LUBSYSTEMS
20	1/4” ID X 1000 mm LONG HOSE ASSEMBLY WITH 10 mm OD X 50 mm LONG STANDPIPE ASSEMBLY AT BOTH ENDS	02 NOS	STD
21	PUMP MOUNTING PAD WITH BOLT/WASHER MOC : STEEL	04 NOS	STD

PRODUCED BY AN AUTODESK EDUCATIONAL PRODUCT

SR.NO.	DESCRIPTION (LUBRICATION)	QTY.	SIZE
1.	TRAVEL WHEEL	6 NOS.	1/4" BSP (ELBOW)
2.	TRAVEL DRIVE	1 NO.	1/4" BSP (STRAIGHT)
3.	AUX. BOOM DRIVE SHAFT PIVOT BLOCK	2 NOS.	1/8" BSP (STRAIGHT)
4.	AUX. BOOM DRIVE SHAFT COVER FOR BRG. HOUSING	2 NOS.	1/8" BSP (STRAIGHT)
5.	AUX. BOOM DRIVE SHAFT AT BRIDDLE –PIVOT BLOCK	2 NOS.	1/8" BSP (STRAIGHT)
6.	AUX. BOOM DRIVE SHAFT AT BRIDDLE –BRG. HOUSING	2 NOS.	1/8" BSP (STRAIGHT)
7	PORTAL PIVOT BLOCK.	4 NOS.	1/4" BSP (STRAIGHT)

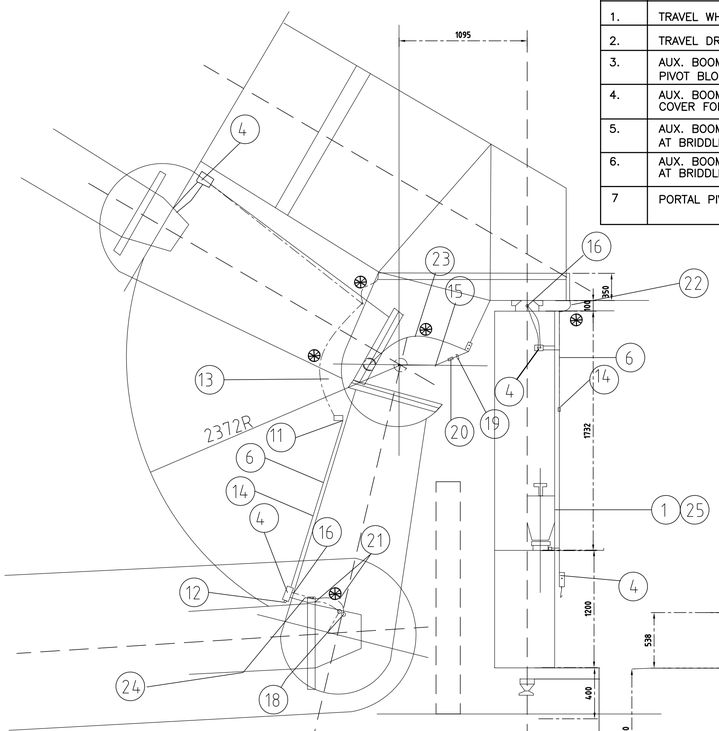

ELEVATION

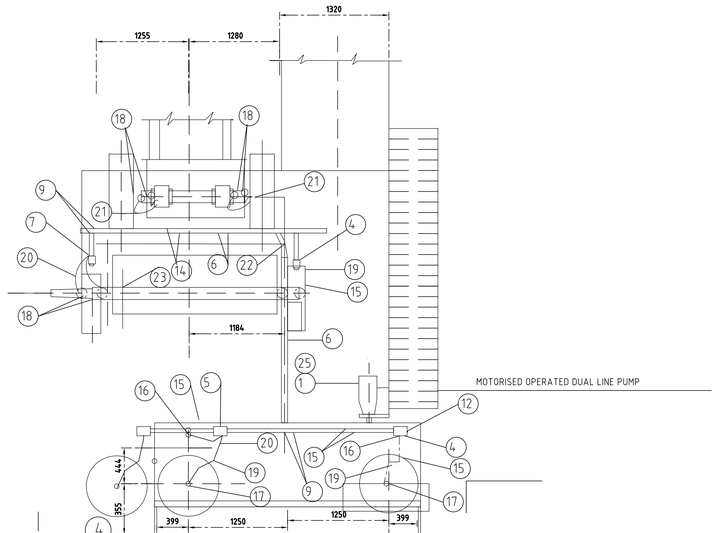

VIEW FROM -A

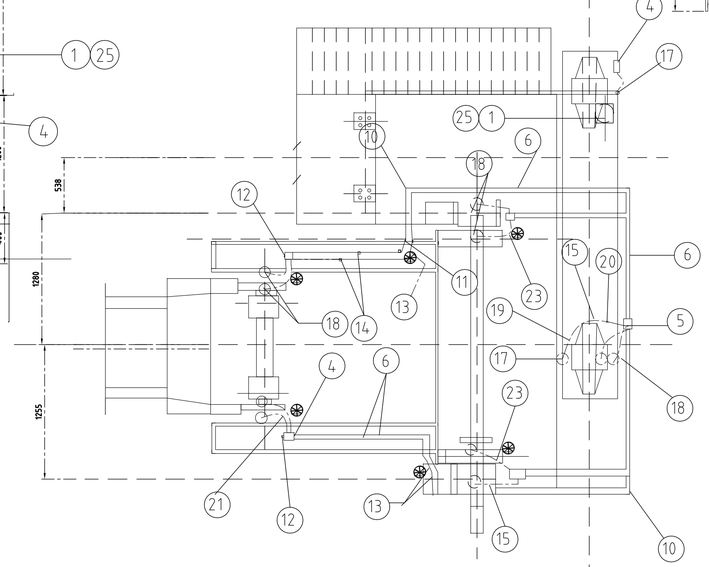

PLAN

EQPT.NO.NO: HM/545 & HM/573-74-75

ORDER NO: CO/2223 & CO/2281

WEIGHT : 300 KGS [APPROX]

NOTE:

1. TOTAL 19 NOS OF LUBRICATION POINTS
2. CONNECTION SIZES OF LUBRICATION POINTS ARE AS PER THE TABLE SHOWN.
3. PIPES FROM PUMP TO DOSE FEEDERS ARE 18 MM OD SEAMLESS STEEL PIPE
4. ALL PIPES AFTER DOSE FEEDER ARE 10 mm OD STEEL TUBE
5. MKD SHOWN THUS ⊛ ARE HOSE PIPE
6. ALL FITTINGS ARE FERRULE TYPE
7. NECESSARY PIPE CUTTING AND BENDING TO BE DONE AT SITE TO SUIT STRUCTURE OF MACHINE
8. ALL PIPE CLAMP, DOSE FEEDER AND PUMP MOUNTING PAD TO BE SITE WELDED
9. TO REFERE WITH ELECON DRG. NO. HL 2052 / 1
10. FOR BOM REFER SPEC SHEET NO:1660-01 REV-2

PUMP PART LIST

1.1	BASE PLATE
1.2	ELECTRIC MOTOR FRAME SIZE 90L
1.3	LOVEJOY COUPLING
1.4	AUTOMATIC GREASE PUMP
1.5	HYDRAULIC DISTRIBUTOR VALVE
1.6	RESERVOIR
1.7	TELL-TALE ROD
1.8	LIMIT SWITCH LEVER TYPE MODEL NO.JLSL-2
1.9	FILLING PLUG

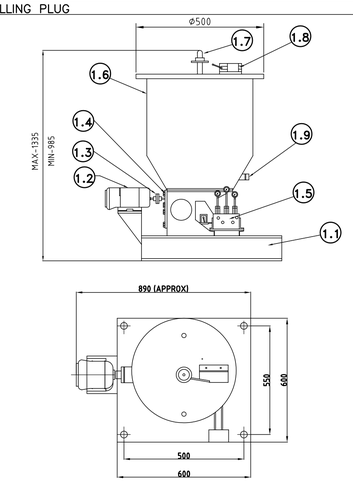

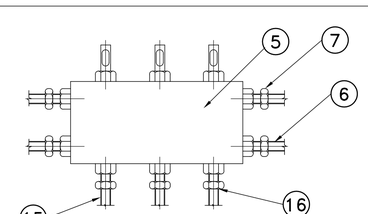

3 OUTLET DOSE FEEDER DTL. DF-31

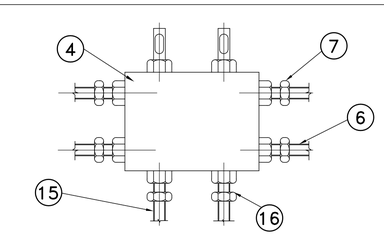

2 OUTLET DOSE FEEDER DTL. DF-21

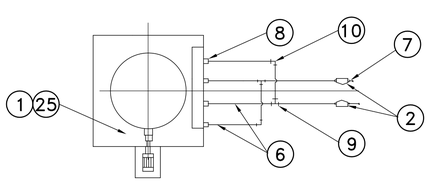

PUMP CONNECTION DETAILS

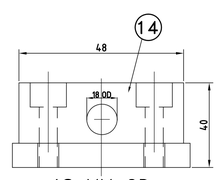

18 MM OD

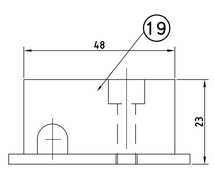

10 MM OD

PIPE CLAMP FIXING DETAILS

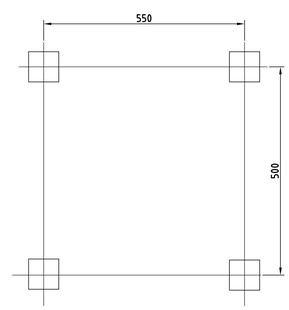

PUMP FOUNDATION DETAILS

REV.	DESCRIPTION	DWN.	CKD.	S.E	APP.	P.M.	DATE.
2.	NO OF POINTS HAVE BEEN INCREASED FROM 15 TO 19.						04.10.12
1.	NO OF POINTS HAVE BEEN INCREASED FROM 12 TO 15.						28.09.12

IFFCO INDIAN FARMERS FERTILISER CO-OP. LTD. PARADEEP

INDIAN FARMERS FERTILISER COOPERATIVE LIMITED.
(PARADEEP UNIT)
VIII - MUSADIA, PARADEEP
DIST. - JAGATSINGHPUR, ORISSA
PIN CODE : 754 142 (INDIA)

LUB SYSTEMS
CHENNAI 600 028.

CUSTOMER :
M/S.ELECON ENGINEERING COMPANY LIMITED
VALLABH VIDYANAGAR, GUJARAT STATE.

PROJECT :
IFFCO – PARADEEP

TITLE: MOTORISED GREASE LUBRICATION SYSTEM FOR AUXILIARY BOOM SIDE OF SCRAPER RECLAIMER

DRAWN	A.S.B
CHECKED	A.M.R.
APPROVED	R.M.D

DWG NO.: 1-LS-1660-01 | SCALE : N.T.S | DATE 04.10.2012 | REV 2

PRODUCED BY AN AUTODESK EDUCATIONAL PRODUCT
PRODUCED BY AN AUTODESK EDUCATIONAL PRODUCT
PRODUCED BY AN AUTODESK EDUCATIONAL PRODUCT

LUBSYSTEMS **CHENNAI – 600 028**	MOTORISED GREASE LUBRICATION SYSTEM FOR AUXILIARY BOOM SIDE OF SCRAPER RECLAIMER		SPEC NO : **1660-01** REV – 2 SHT 1/2
	CUSTOMER : **M/S ELECON ENGG. CO. LTD**	**PROJECT :** **IFFCO-PARADEEP**	ELECON DRG NO. **HL 2047 / 1**
			ORDER NO.**CO/2223** M/C NO.**HM / 545**

S.NO	DESCRIPTION	QTY	MAKE
1	MOTORISED DUAL LINE GREASE PUMP WITH 50 LITS. CONTAINER, HEAVY FOLLOWER PLATE AND TELL TALE ROD WITH LOW LEVEL LIMIT SWITCH. THE PUMP WILL HAVE A DISCHARGE CAPACITY OF 60CC / MIN & A WORKING PRESSURE OF 150 KGS/SQ.CM [MAX]. THE PUMP IS FITTED WITH A 4 – WAY HYDRAULIC DISTRIBUTOR VALVE FOR LINE CHANGE OVER. THE PUMP IS COUPLED TO AN ELECTRIC MOTOR OF 1 HP, 1400 RPM, 3 PHASE, 50C/S, CLASS 'F' INSULATION LIMITED TO CLASS'B, TEFC, IP-55 PROTECTION. MOC : C.I. /STEEL	01 NO	PUMP LUBSYSTEMS MOTOR KEC
2	IN-LINE GREASE FILTER 3/8" BSP. MOC C.I. / STEEL	02 NOS	LUBSYSTEMS
3	NOT USED	-	LUBSYSTEMS
4	2-OUTLET DOSE FEEDER HAVING A DISCHARGE CAPACITY OF 0.5 TO 2.0 CC OF GREASE PER STROKE PER OUTLET. TYPE DF-21. MOC C.I. /STEEL	08 NOS	LUBSYSTEMS
5	3-OUTLET DOSE FEEDER HAVING A DISCHARGE CAPACITY OF 0.5 TO 2.0 CC OF GREASE PER STROKE PER OUTLET . TYPE DF-31. MOC C.I. /STEEL	01 NO	LUBSYSTEMS
6	18 mm OD X 2 mm T SEAMLESS STEEL TUBE MOC STEEL	40 MTS	STD
7	HALF UNION ASSEMBLY SUITABLE FOR 18 mm OD TUBE WITH 3/8" BSP THREAD. MOC : STEEL	28 NOS	LUBSYSTEMS
8	HALF UNION ASSEMBLY SUITABLE FOR 18 mm OD TUBE WITH 1/2" BSP THREAD. MOC : STEEL	04 NOS	LUBSYSTEMS
9	UNION TEE ASSEMBLY SUITABLE FOR 18 mm OD TUBE MOC : STEEL	12 NOS	LUBSYSTEMS
10	ELBOW UNION ASSEMBLY SUITABLE FOR 18 mm OD TUBE MOC : STEEL	20 NOS	LUBSYSTEMS
11	UNION ASSEMBLY SUITABLE FOR 18 MM OD TUBE MOC : STEEL	12 NOS	LUBSYSTEMS
12	3/8" BSP PLUG MOC : STEEL	12 NOS	LUBSYSTEMS
13	1/2" ID X 1000 mm LONG HOSE ASSEMBLY WITH 18 mm OD X 50 mm LONG STANDPIPE ASSEMBLY AT BOTH ENDS	04 NOS	STD
14	1- WAY CLAMP WITH PAD / SCREW FOR 18 mm OD TUBE MOC : NYLON / STEEL	40 NOS	LUBSYSTEMS
15	10 mm OD X 1 mm T SEAMLESS STEEL TUBE	25 MTS	STD
16	STRAIGHT CONNECTOR SUITABLE FOR 10 mm OD TUBE WITH 1/4" BSP THREADS. MOC : STEEL	24 NOS	LUBSYSTEMS
17	ELBOW CONNECTOR SUITABLE FOR 10 mm OD TUBE WITH 1/4" BSP THREAD. MOC : STEEL	06 NOS	LUBSYSTEMS
18	STRAIGHT CONNECTOR SUITABLE FOR 10 mm OD TUBE WITH 1/8" BSP THREADS. MOC : STEEL	08 NOS	LUBSYSTEMS

LUBSYSTEMS CHENNAI – 600 028	MOTORISED GREASE LUBRICATION SYSTEM FOR AUXILIARY BOOM SIDE OF SCRAPER RECLAIMER		SPEC NO : **1660-01** REV – 2 SHT 2/2
	CUSTOMER : **M/S ELECON ENGG. CO. LTD**	**PROJECT :** **IFFCO-PARADEEP**	ELECON DRG NO. **HL 2047 / 1**
			ORDER NO.**CO/2223** M/C NO.**HM / 545**

S.NO	DESCRIPTION	QTY	MAKE
19	1-WAY CLAMP WITH PAD / SCREW FOR 10 mm OD TUBE MOC NYLON / STEEL	20 NOS	LUBSYSTEMS
20	UNION ASSEMBLY SUITABLE FOR 10 mm OD TUBE MOC : STEEL	12 NOS	LUBSYSTEMS
21	1/4” ID X 1000 mm LONG HOSE ASSEMBLY WITH 10 mm OD X 50 mm LONG STANDPIPE ASSEMBLY AT BOTH ENDS	04 NOS	STD
22	1/2” ID X 600 mm LONG HOSE ASSEMBLY WITH 18 mm OD X 50 mm LONG STANDPIPE ASSEMBLY AT BOTH ENDS	02 NOS	STD
23	1/4” ID X 750 mm LONG HOSE ASSEMBLY WITH 10 mm OD X 50 mm LONG STANDPIPE ASSEMBLY AT BOTH ENDS	02 NOS	STD
24	HOSE CLAMP FOR 1/4” ID HOSE	04 NOS	LUBSYSTEMS
25	PUMP MOUNTING PAD WITH BOLT/WASHER MOC : STEEL	04 NOS	STD

INSTALLTION, OPERATION

&

MAINTENANCE MANUAL

FOR

DUAL LINE GREASE LUBRICATION SYSTEM

LUB SYSTEMS, New No.43, [Old No.27], I Main Road, R.A.Puram,
Chennai – 600 028, Tamil Nadu.
Tel : [044] 2435 3405 ; Fax : [044] 2434 1285
E Mail : lubsystems@eth.net & lubsystems@vsnl.net

LUBSYSTEMS

INTRODUCTION

This type of Lubrication Systems are used in places where a number of lubrication points are to be fed with heavy oil or grease in pre determined quantities to ensure that bearing seizures do not take place due to negligence of manpower, inaccessibility of lubrication points and inability to approach machines when they are working.

Some examples of such machines are:-

a) Jaw Crushers
b) Apron Feeders
c) Material Handling equipment such as Stacker, Reclaimer, Ship Loaders etc.
d) Sugar Machineries
e) Hydro Turbines
f) Steel Plant Machineries
g) Cement Plant Machineries
h) Thermal plant

This method of lubrication employs automatic controls to ensure that the bearings do not suffer from lack of lubrication. Incorporation of cycling timer provided in the Panel also ensures that timely lubrication is done, thus avoiding over lubrication.

IMPORTANT COMPONENTS

MOTORISED HEAVY DUTY PUMP	-	To Pump heavy grease
INLINE GREASE FILTER	-	To filter impurities from grease
DOSE FEEDER	-	To dose quantity of grease flowing to the various bearing points
ELECTRICAL CONTROL PANEL	-	To give audio-visual indication in the event of fault and ensure auto start & auto stop of the Motor
PIPES & FITTINGS	-	To convey heavy grease from Pump to Dose Feeders and from Dose Feeders To bearing points using suitable fitting at various joints.

LUBSYSTEMS

STORAGE & HANDLING OF SYSTEMS AT SITE

I. BEFORE INSTALATION

1. Make sure that all boxes are kept in such a manner that they rest on the bottom base of the box and are not kept in such a manner that boxes be on their sides or with the base of the box facing sky wards.

2. Make sure that heavy objects / boxes are NOT kept on top of these boxes.

3. Make sure no heavy boxes are kept on top of pipe bundles which are part of the lubrication System

4. Make sure that boxes & pipe bundles are stored in dry / dust free area.

II. DURING INSTALLATION

1. Make sure that container of the pump is always kept with lid on to prevent foreign objects from falling into the container.

2. Make sure that all items needed for installation are available at site before you start installation work. Half complete or Incomplete installation always causes problem for smooth conduct of other works also.

III. AFTER INSTALATION / BEFORE TRAIL RUN

1. Make sure that all joints are tight.
2. Make sure that all pipes are clamped
3. Make sure that pump is bolted to the mounting pads
4. Make sure that Electrical Motor bolts are firm and make sure that there is no loose bolts.
5. Make sure Pump & Motor alignment is ok and shaft rotates freely.
6. Make sure that crank case [GEAR BOX] of pump is topped up with SAE . 90 OR heavier oil so that the lubricating pump never runs dry.
7. Make sure that pump container is always filled with lubricant.
8. Make sure the Electrical connections are perfect. Check for continuity of the circuit.

After all the these checks are done, the pump is ready to be started . Start the pump thru' the Panel and switch off after about 10-15 seconds and ensure that every thing is in perfect condition before taking a longer run

NOTE : THE MOTOR CAN ROTATE IN EITHER DIRECTION•TO MINIMISE THE WEAR AND TEAR IN THE WORM WHEEL & SHAFT TRY TO RUN THE PUMP IN ONE DIRECTION ONLY•

LUBSYSTEMS

PUMP DESCRIPTION

Enclosed sketch depicts a view of the pump showing the important components thereof along with relevant specification . The Automatic Dual Line Grease Lubrication Pumping station consists of a Reservoir, Pump Body, Heavy Follower plate, Low Level Limit Switch with Tell Tale Rod, Electric Motor, and a 4-Way Change Over Valve. This is a Plunger type pump. Plunger movement is achieved by a Cam shaft, which is attached to a single stage reduction gear. The gear is coupled to an Electric Motor.

The Pump outlet is provided with a spring loaded Non-Return Valve which will ensure that the Grease pumped out will not go back to reservoir.

The outlet of the Pump is connected to a 4-Way Line Change Over Valve (Hydraulic Distributor Valve). This valve is provided with Pressure Gauges, Pressure Relief Valves for Pump pressure and line pressure. This Valve is also provided with a Limit Switch to send signal to Panel to trip the Motor after line change has taken place.

LUB SYSTEMS

MOTORISED GREASE PUMP

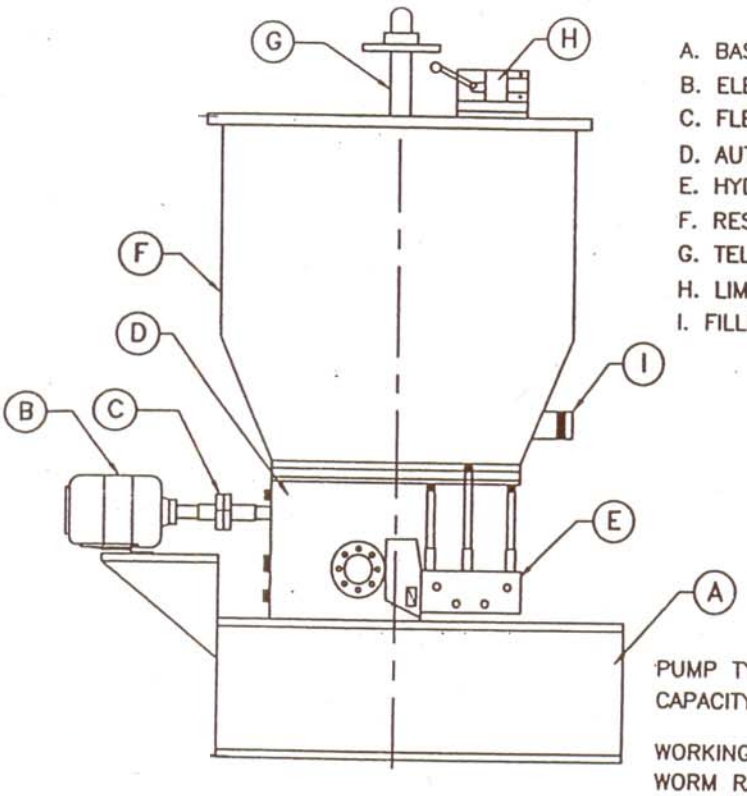

A. BASE PLATE
B. ELECTRIC MOTOR
C. FLEXIBLE COUPLING
D. AUTOMATIC GREASE PUMP
E. HYDRAULIC DISTRIBUTOR VALVE
F. RESERVOIR
G. TELL–TALE ROD
H. LIMIT SWITCH
I. FILLING FILTER

PUMP TYPE	: PLUNGER PUMP
CAPACITY	: 150 cc/min. model GPS – 150
WORKING PR.	: 150Kg./cm. sq.
WORM RATIO	: 20:1
RESERVOIR	: 70 Litres – Std
ACTUATION	: With 4–way distributor valve.
MOTOR DETAIL	: 2 HP, 1440 R.P.M, 440V, 3 Phase, T.E.F.C.

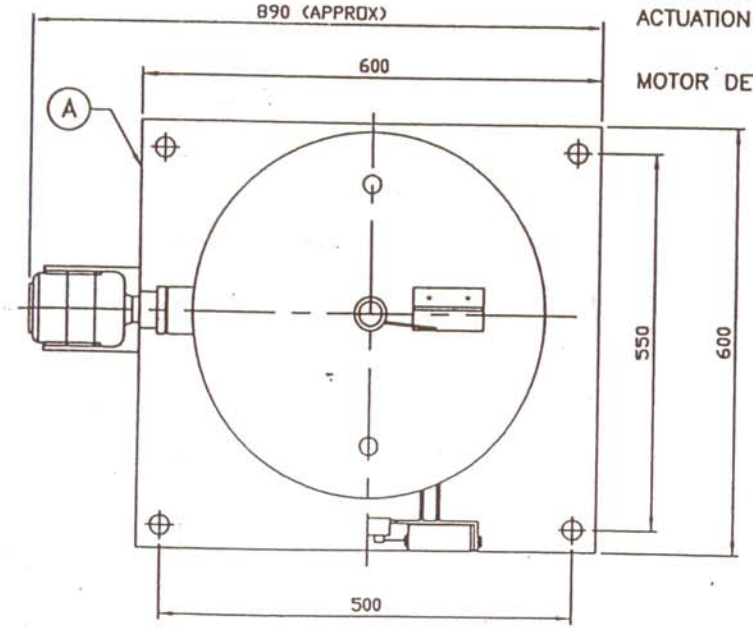

PREPARING PUMP FOR APPLICATION

Mounting dimensions of the Pump are shown in the G.A. Drawing of the equipment. For mounting on concrete floor, grouting is recommended using foundation bolts of sufficient length and strength. After the Pump has been grouted and bolted, oil level inside the Pump gear box should be checked by means of a dip-stick provided, which indicates the minimum oil level. Gear Oil such as SAE 90 oil should now be poured in to a level of 20 mm above the minimum marking. Now the Pump is ready for charging with grease. After the grease has been charged in the Container, the Motor should be rotated by hand to check that it is free and pumping grease before supply of Electric Motor.

LUBSYSTEMS

EXPLODED VIEW OF MOTORISED PUMP

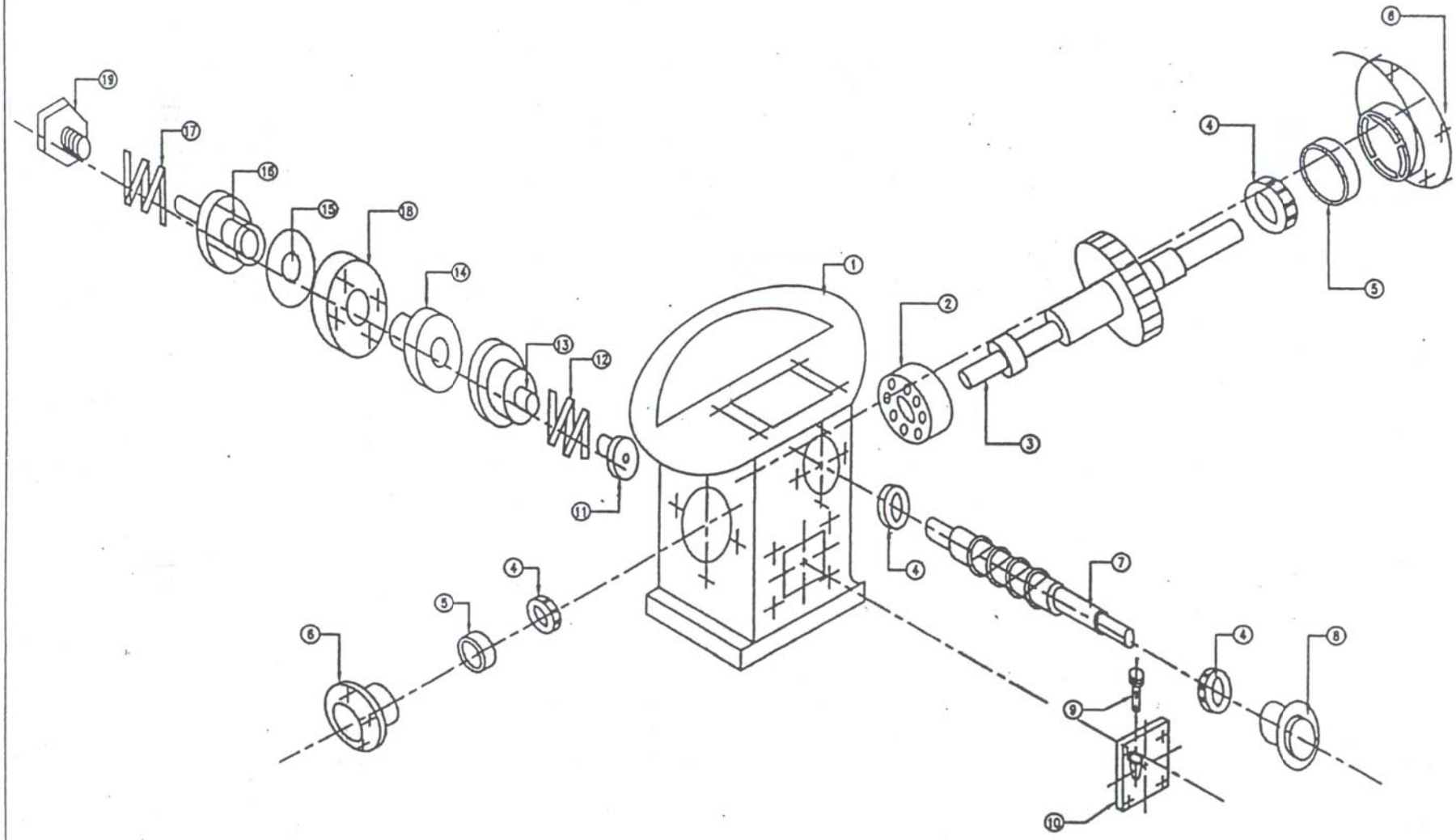

LUBSYSTEMS

PART LIST FOR DUAL LINE PUMP

S.NO	PART NO	DESCRIPTION	QTY
01	2 – 001	PUMP BODY	01 NO
02	10 - 003	BALL BEARING	01 NO
03	2 - 004 / 1	CAM SHAFT WITH WORM WHEEL	01 NO
04	10 - 002	TAPPER ROLLER BEARING	04 NOS
05	2 – 013	PULLER PLATE	03 NOS
06	2 – 002	END FLANGE COVER	02 NOS
07	2 – 005	WORM SHAFT	01 NO
08	2 – 003	WORM SHAFT FLANGE	01 NO
09	2 – 014	DIP STICK	01 NO
10	2 – 009	INSPECTION COVER	01 NO
11	2 – 008 /1	PLUNGER	01 NO
12	2 – 033	PLUNGER RETURN SPRING	01 NO
13	2 – 008 / 2	CYLINDER	01 NO
14	2 – 010 / 1	NON RETURN VALVE SEALING WASHER	01 NO
16	2 – 010 / 3	NON RETURN VALVE BODY	01 NO
17	2- 010 / 2	NON RETURN VALVE STEM	01 NO
18	10 – 128	NON RETURN VALVE SPRING	01 NO
19	2 – 011	OUTLET FLANGE	01 NO
20	2 - 012	OUTLET PLUG	01 NO

NOTE : ITEM NO 11 &13 AND ITEM NO 14 & 16 ARE SUPPLIED AS **MATCHED SET ONLY**

PRINCIPLES OF OPERATION

This valve is used in Loop type Automatic Grease Lubrication Station. End pressure Valve is eleminated. The flow of grease is directed from Line I to II hydraulically by internal pressure created in the incoming lines after completion of one cycle of lubrication and vice-versa.

A limit switch is provided with this valve which operates through the striker of the valve and stops the station on completion of the cycle of Lubrication.

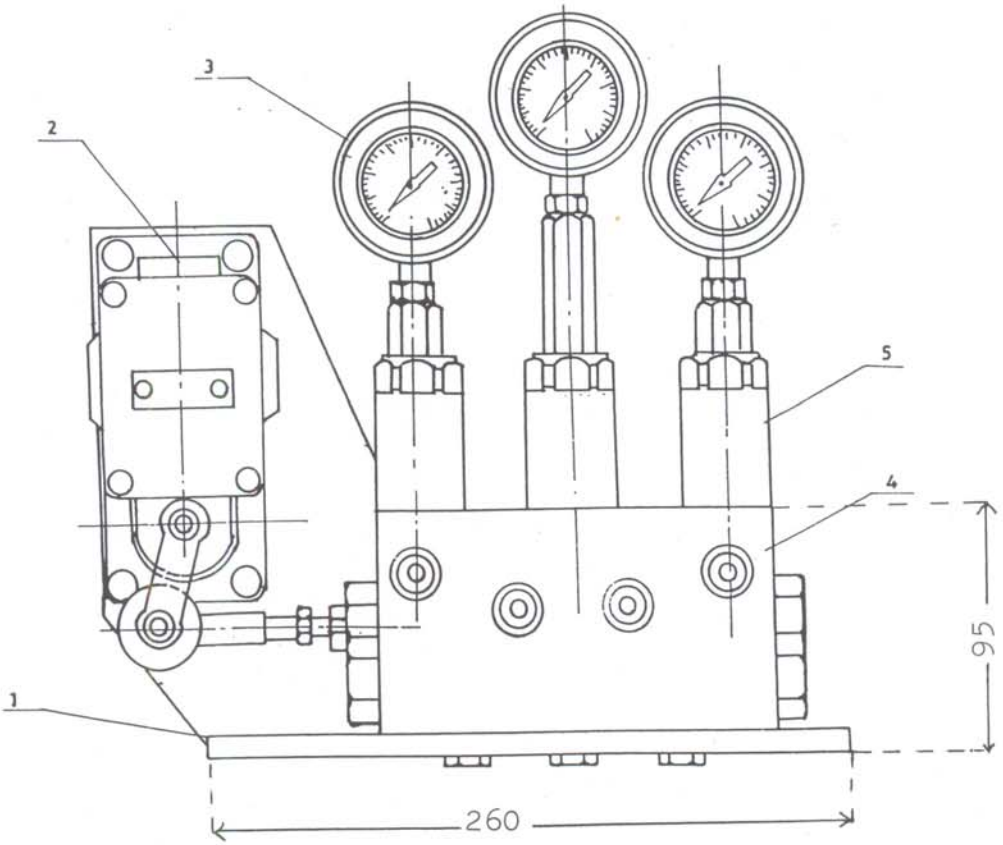

CONSTRUCTION :

1. Base Plate
2. Limit Switch
3. Pressure Gauge
4. Hydraulic Distributor
5. Relief Valve.

SPECIFICATIONS:

Working Pressure	: 150 Kgs/Sq.Cm.
Limit Switch	: 220v, 3 Amp.
Connection	: 1/2" BSP
Part No.	: HDV - 01.

LUB SYSTEMS

LUBSYSTEMS

HYDRAULIC DISTRIBUTOR VALVE

A1 & B1 – PRESSURE LINE

B2 & A2 – RETURN LINE

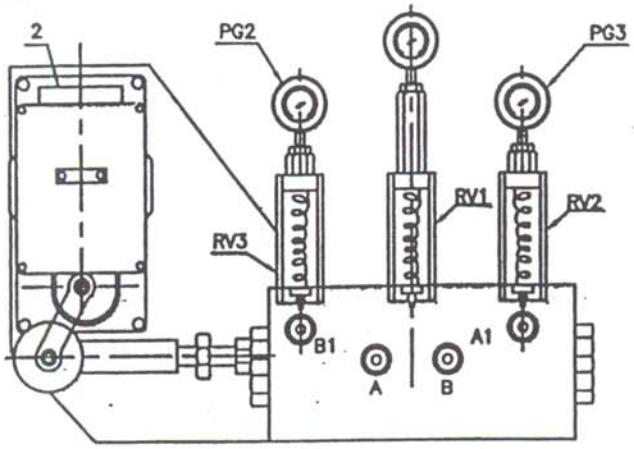

RV1 – PUMP RELIEF VALVE

RV2 – RETURN PRESSURE RELIEF VALVE FOR LINE 'A'

RV3 – RETURN PRESSURE RELIEF VALVE FOR LINE 'B'

PRESSURE ADJUSTMENT OF DISTRIBUTOR VALVE

After priming of the A & B lines and before the system is commissioned, unscrew the relief valve plug in all the relief valves.
This is done to prevent excess pressure in the line start the pump and observe at what pressure the line change over is taking place and also which are all the Dose Feeders that are working. Slowly tighten the Relief Valve Plug (Pump & Working line) Tighten till the last Dose Feeder is working. Again tighten the plug such that the change over pressure is 15% to 20% higher than the pressure at which last Dose Feeder is working.

IMPORTANT NOTE:

The Pump Relief Valve pressure setting is more than the return line pressure.

LUBSYSTEMS

EXPLODED VIEW OF 4-WAY HYDRAULIC DISTRIBUTOR VALVE

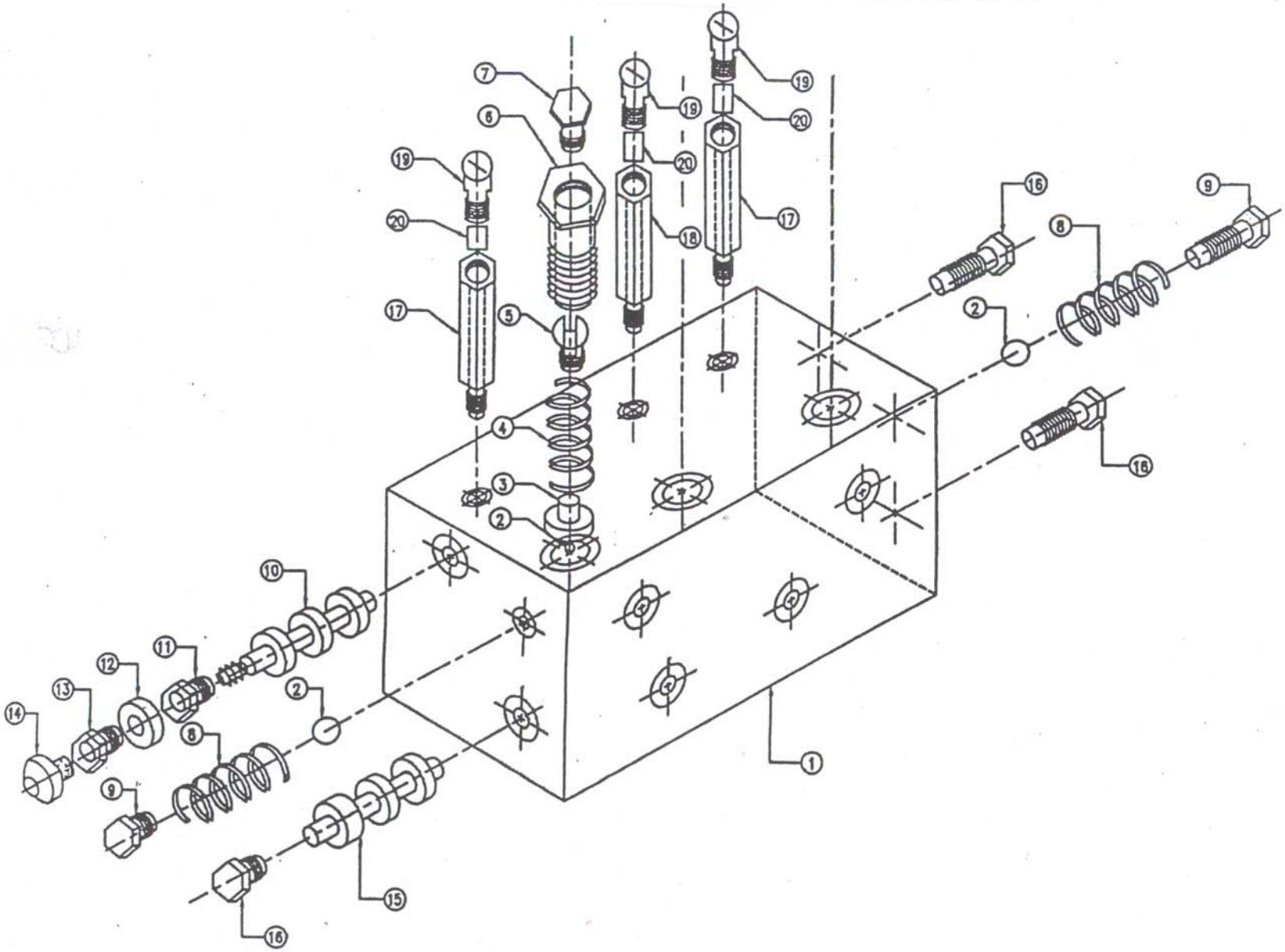

LUBSYSTEMS

PART LIST FOR HYDRAULIC DISTRIBUTOR VALVE

S.NO	PART NO	DESCRIPTION	QTY
01	4- 001	VALVE BODY	01 NO
02	10 – 025	RELIEFVALVE STEEL BALL	05 NOS
03	4 – 010	SPRING SEAT	03 NOS
04	4 – 009	RELIEF VALVE SPRING	03 NOS
05	4 – 011	RELIEF VALVE ADJUSTING PLUG	03 NOS
06	4 – 008	RELIEF VALVE BODY	03 NOS
07	4 – 012	BLANKING PLUG	03 NOS
08	3 – 023	AIR RELEASE SPRING	02 NOS
09	3 – 022	AIR RELEASE PLUG	02 NOS
10	4 – 002 / 0	MAIN SPOOL WITH EXTN. ROD	01 NO
11	4 – 004	BUSH FOR MAIN SPOOL	01 NO
12	4 – 016	RUBBER SEALING WASHER	01 NO
13	4 – 005	BUSH FOR MAIN SPOOL SEALING	01 NO
14	4 – 007	ADJUSTING KNOB	01 NO
16	4 – 002 / 1	AUXILLARY SPOOL	01 NO
17	4 – 003	BLANKING PLUG	03 NOS
18	4 – 014	PRESSURE GAUGE STEM [SMALL]	03 NOS
19	4 – 015	PRESSURE GAUGE STEM [BIG]	01 NO
20	10 - 015	PRESSRE GAUGE 0 – 350 KGS/SQ.CM	01 NO

LUBSYSTEMS

LINE MOUNTED GREASE FILTER

Line Mounted Grease Filters are designed for removing mechanical impurities from grease delivered to the system at high pressure.

The Filter comprises of a C.I body and a perforated Cartridge into which a wire mesh element is inserted. The design of the filter is such that the cartridge can be removed for cleaning or replacement without dismantling the pipe line.

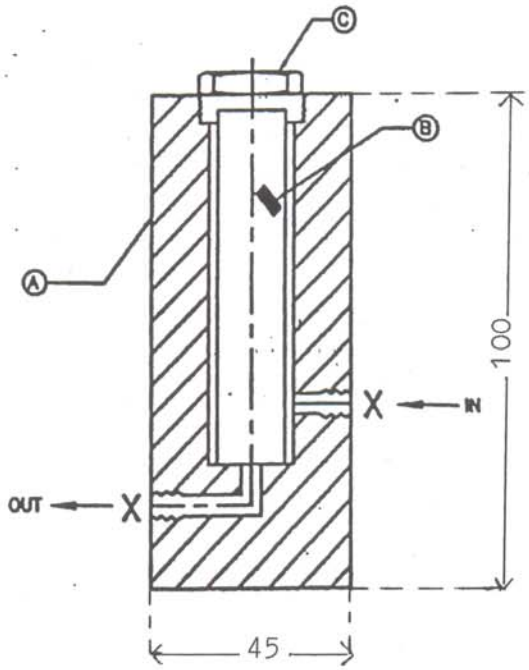

LEGEND:

A – FILTER BODY
B – FILTER ELEMENT
C – PLUG
X – IN/OUTLET 3/8" BSP

SPECIFICATION:

Effective Filting AREA	100Sq.Cm.
Connecting Thread	3/8" BSP
Working Pressure	250Kg/Sq.Cm
Neitt Weight (approx)	3.0Kg
Part No.	GFI–38

DOSE FEEDER

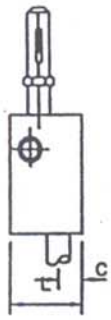

DF11 12

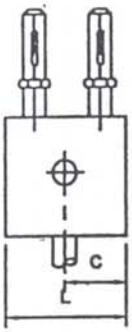

DF 13

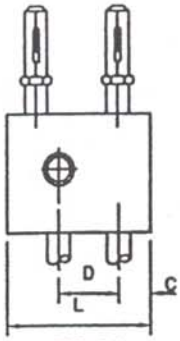

DF 21

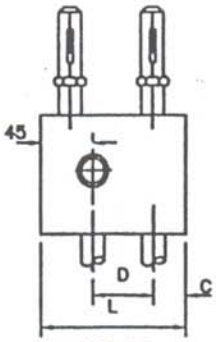

DF 22

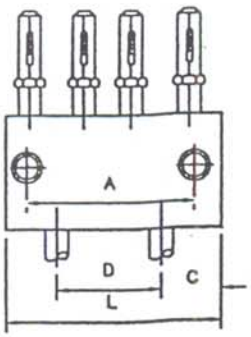

DF 23

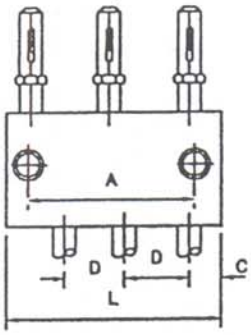

DF 31 32

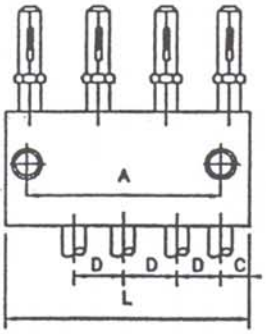

DF 41 42

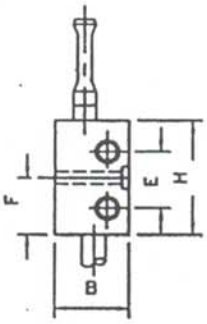

RIGHT SIDE VIEW

TYPE	INLET	OUTLET	L	B	H	L1	L2	A1	A	h1	X
DF-11	3/8"BSP	1/4"BSP	55	36	65	16	–	42	–	42	0.5 TO 2.0cc per strock per oulet
DF-21	3/8"BSP	1/4"BSP	85	36	65	16	30	42	–	42	
DF-31	3/8"BSP	1/4"BSP	120	36	65	16	30	42	30	42	
DF-41	3/8"BSP	1/4"BSP	150	36	65	16	30	42	60	42	
DF-12	3/8"BSP	1/4"BSP	55	45	80	10	–	52	–	52	1.5 TO 5cc per strock per oulet
DF-22	3/8"BSP	1/4"BSP	100	45	80	10	40	52	–	52	
DF-32	3/8"BSP	1/4"BSP	140	45	80	10	40	52	38	52	
DF-42	3/8"BSP	1/4"BSP	180	45	80	10	40	52	76	52	
DF-13	3/8"BSP	1/4"BSP	100	45	80	50	–	52	–	52	3-10cc/oulet /strock
DF-23	3/8"BSP	1/4"BSP	180	45	80	50	80	52	76	52	

WORKING OF DOSE FEEDER

Dose Feeders are the dual line adjustable measuring valve blocks employed in the Centralised Two-Line Grease Lubrication System to deliver measured quantity of lubricant to the bearing points under system pressure. These are mounted across the two lines and the outlets are connected to the bearing points by means of suitable pipe line. The operation of a typical Dose Feeder is illustrated below:

Grease inlets are Y, and Z and Grease outlet is O. During one cycle,grease enters through Y and subsequently pushes the shuttle valve V up,thereby opening port W into the under cut of the shuttle valve V.

Grease now enters through port W into the bottom of chamber C and pushes piston P up. Consequently,grease collected in the top of chamber C during the earlier cycle is pushed out by the piston P in its upward movement through port X, via the under cut of shuttle valve V,horizontal cross bore and finally out of the feeder through O.

In the next cycle similarly grease enters through Z, pushes shuttle valve V down, Enters top of chamfer C through port Y, pushes the piston P down, thereby driving out the grease collected in the bottom of chamfer C during the first cycle through port W, shuttle valve under cut, horizontal cross bore and finally out through outlet O.

The indicator provides visual indication that the main piston P is working up and down during cycles of lubrication. Adjusting screw provided on the top of the indicator can be set, as desired, to limit the stroke of the main piston P, thereby limiting the output.

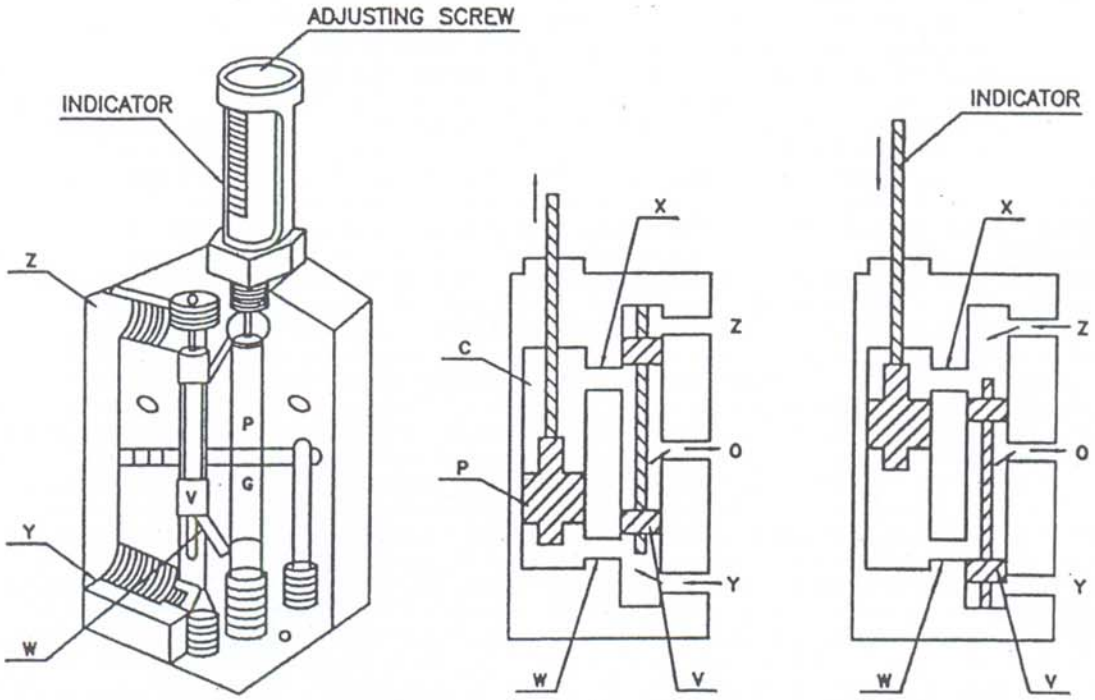

WORKING OF THE SYSTEM WITH HYDRAULIC DISTRIBUTOR VALVE

When the Pump starts pumping grease through a Non-Return Valve to the Hydraulic Distributor Valve, the grease will flow in one of the lines of the Dose Feeders located at a convenient location to the lubrication point. Once the grease is discharged from all the Dose Feeders, the pressure in the pipe line will increase. This pressure increase in the line will activate the Relief Valve so as to effect line change over [From working line to non-working line]. During this change over the Limit Switch provided by the side of the Hydraulic Distributor Valve will send signal to the Panel to trip the running Motor and again when the Motor is started automatically or manually as the case may be now, through the second line the grease is fed to the Dose Feeders and again the change over will take place and the cycle now gets completed. As a safety measure the Hydraulic Distributor Valve will also be provided with the Pressure Gauges. One Pressure Gauge is for Pump pressure and the other two are for line pressure.

IMPORTANT NOTE:

1. Do not tamper with the Relief Valve setting after adjustment is done during commissioning.

2. The Pump pressure should be kept more than the line change over pressure to prevent malfunctioning of the System.

3. Adjust both the line pressure readings so that they show the same pressure.

LUBSYSTEMS

FITTINGS ERMETTO TYPE

BEFORE TIGHTNING

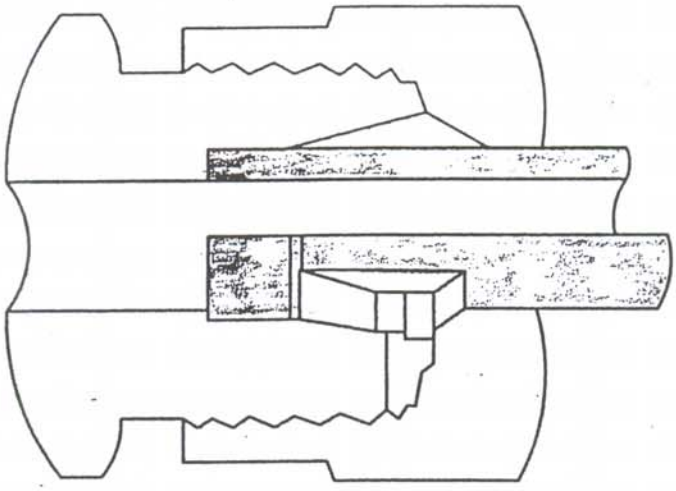

AFTER TIGHTNING

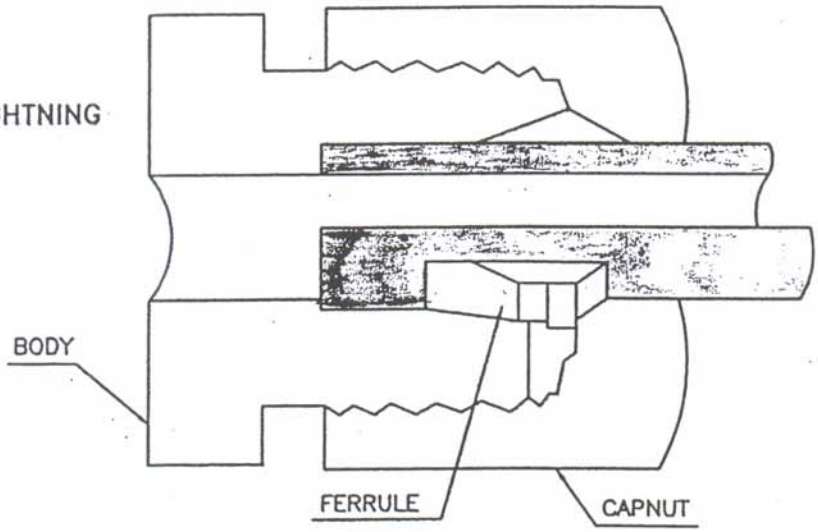

Eemetto type pipe joints gives the best sealing and pressure holding characterstics. This fitting consists of a three piece design namely Body, Cap Nut, and a case hardened Ferrule. During the assembly of the fitting on to the pipe, the nut is screwed on to the body causing the ferrule to slide along the inner conical seat of the body and grips the pipe. while further tightening the leading edge of the ferrule bits into the pipe throwing up a visible collar of displaced metal which acts as a metallic inter lock and results into a leak proof joint.

LUBSYSTEMS

SYSTEM MAINTENANCE

WEEKLY

1. Clean off all dirt from Pump and ensure that no oil leaks are present at Pump.

2. Check for noise during running of Motor and Pump. Ensure that alignment is proper and coupling is tightened if necessary.

3. Check the Pressure Gauges reading is correct and keep Gauges clean.

4. Check whether Relief Valve setting is O.K. Kindly ensure that if it adjusted the Pump Relief Valve tightening is more than the line Relief Valves.

5. Periodically check the Non Return Valve for any impurities. This will ensure that trouble free pumping takes place.

MONTHLY

1. Filter provided at the filling plug in the container should be cleaned well in petrol and air blown to keep it clean.

2. Check Valve assembly should be cleaned with Petrol and air while refitting

3. Adequate care should be taken for proper seating of Check Valve.

YEARLY

1. Replace all seals, washers and gaskets.

2. Push Worm Shaft length wise and ensure that play is not abnormal. Since this Worm Shaft is held by taper roller bearing on both sides, in the event of play, it means that re-adjustment is required.

3. Plunger assembly should be removed, inspected and cleaned. Replace the complete set if necessary.

LUBSYSTEMS

TROUBLE SHOOTING CHART

A.	PROBLEM : PRESSURE GAUGES NOT READING OR GAUGES FUNCTIONING, BUT NOT RISING	
	POSSIBLE CAUSES	REMEDY
a)	Spool Valve in gauge body is struck	Remove gauges and push the spool down. Pour light oil and refit
b)	Air Lock in Container	Open up Non-Return Valve Plug. Clean Valve seat and then bleed off the air-lock
c)	Leakage in the main pipe line	Check pipe lines for leakage and rectify
d)	Relief Valve seating worn out	Open relief valve, check ball seating and if necessary replace the balls.
B.	PUMP NOT WORKING EVEN WHEN MOTOR IS 'ON'	
	POSSIBLE CAUSES	REMEDY
a)	Break in the electrical continuity	Check continuity and rectify if necessary in the main three phase supply
b)	Coupling disengaged	Check and rectify
c)	Pump piston broken	Replace with new piston and cylinder Assembly
d)	Return Spring of piston broken	Replace with new spring.
C	LINE CHANGE OVER TAKES PLACE BUT PANEL INDICATE SYSTEM FAULT	
	POSSIBLE CAUSES	REMEDY
a)	Extension rod of Spool Valve is Broken	Replace with new one
b)	Limit Switch lever is loose	Tighten the same
D	CONTROL PANEL GIVES 'FAULT' INDICATION	
a)	As in I, II, III points	To take action as mentioned above

E	DOSE FEEDER PIN NOT MOVING	
	POSSIBLE CAUSES	**REMEDY**
a)	In a particular dose feeder the indicating Pin is not moving	Remove the hose connection at bearing and check for any blockage. If it is blocked blow high pressure air and Refit it.

MOST IMPORTANT NOTE

ALL DOSE FEEDER PISTONS AND SPOOLS ARE MATCH FITTED. HENCE DO NOT TAMPER AND DO NOT INTERCHANGE PARTS. CLEAN IT WITH ONLY CLEAR CLEANING AGENT.

ELECON EPC PROJECTS LIMITED

LUBRICATION SCHEDULE

ELECON EPC
ELECON EPC PROJECTS LIMITED

LUBRICATION SCHEDULE FOR MECHANICAL ITEMS FOR FULL PORTAL TYPE SCRAPER RECLAIMER CO/2281 , HM/573

SR. NO.	EQUIPMENT	TYPES OF LUBRICANT	QTY. REQD./ITEM		PERIOD OF RE-LUBRICATION	TYPE OF LUBRI-CANT	TOTAL QTY. REQUIRED
			OIL	GREASE			
1	**GEAR BOX**						
(a)	Travel Drive	Servomesh SP-320 or Equiv.	30 Liters		F & Y	S	60 Liters
(b)	Main Scraper chain drive	Servomesh SP-320 or Equiv.	65 Liters		F & Y	S	65 Liters
(c)	Aux. Scraper Chain Drive	Servomesh SP-320 or Equiv.	18 Liters		F & Y	S	18 Liters
2	**FLUID COUPLING**						
(a)	Main Scraper chain drive	Bharat Hydrol –46 or Servo system HLP-46 or Castrol hyspin VG-46	9.64 Liters		2 Years	O	9.64 Liters
(b)	Aux. Scraper Chain Drive	Bharat Hydrol –46 or Servo system HLP-46 or Castrol hyspin V-46	6.8 Liters		2 Years	O	6.8 Liters
3	**THRUSTOR FOR DRIVE**						
(a)	Travel Drive	Transformer oil	2.6 ltrs.		2 years	O	2.6 ltrs.

ELECON EPC
ELECON EPC PROJECTS LIMITED

SR. NO.	EQUIPMENT	TYPES OF LUBRICANT	QTY. REQD./ITEM		PERIOD OF RE-LUBRICATION	TYPE OF LUBRI-CANT	TOTAL QTY. REQUIRED
			OIL	GREASE			
4	**BEARINGS**						
(a)	For Travel Mechanism			2 Kgs.	T	A	14 Kgs. (For 7 Nos.)
(b)	For Guide Roller			2 Kgs.	T	H	8 Kgs. (For 4 Nos.)
(c)	For Main scraper drive shaft brgs.			1.5 kgs.	T	A	3 Kgs. (For 2 Nos.)
(d)	For Rope sheave brgs.			1.5 kgs.	T	H	24 Kgs. (For 16 Nos.)
5	**CABLE REELING DRUM**						
(a)	Gear of geared motor	SERVOMESH SP-320	2Liters		F & Y	S	4 Liters
(b)	Worm gear box with Contorq unit	SERVOMESH SP-460	11 Liters		F & Y	S	22 Liters
(c)	Chain	MINERALOIL SAE-40 or 60	1 Liters		F & Y	S	2 Liters
6	**TRAVEL BOGIE**						
(a)	DRIVE BOGIE	SERVOMESH SP-320 or EQUI.	16 Liters		F & Y	S	32 Liters (For 2 Nos.)

S = SPLASH LUBRICATION

A = AUTOMATIC LUBRICATION SYSTEM

O = OIL FOR FILLING

H = HAND GREASING

F = FIRST OIL CHANGE AFTER 500 hrs

Y = ONCE A YEARS

T = ONCE IN THREE MONTHS

M = ONCE IN A MONTH

W = ONCE IN A WE

ELECON EPC PROJECTS LIMITED

SECTION – III

SPARE PARTS LIST FOR

FULL PORTAL TYPE SCRAPER RECLAIMER

ELECON EPC PROJECTS LIMITED

I N D E X

S E C T I O N - III

SPARE PARTS LIST FOR FULL PORTAL TYPE SCRAPER RECLAIMER

SR. NO.	DESCRIPTION	PAGE NO
1	G.A. OF FULL PORTAL TYPE SCRAPER RECLAIMER	1
2	TRAVEL DRIVE ASSEMBLY	2
3	TORQUE ARM SUPPORT-I	5
4	TORQUE ARM SUPPORT-II	7
5	ASSEMBLY OF SINGLE WHEEL BOGIE	9
6	ASSEMBLY OF DRIVE BOGIE	12
7	ASSEMBLY OF IDLE BOGIE	16
8	GUIDE ROLLER ASSEMBLY	19
9	BRACKET WITH BUFFER	21
10	ASSEMBLY OF BLADE (MAIN BOOM)	23
11	SCRAPER BLOCK LINK CHAIN (MAIN BOOM)	25
12	SCRAPER DRIVE SHAFT ASSLY. (MAIN BOOM)	27
13	SCRAPER DRIVE ASSEMBLY (MAIN BOOM)	31
14	TAKE-UP UNIT ASSEMBLY (MAIN BOOM)	34
15	TORQUE ARM FOR SCRAPER DRIVE (MAIN BOOM)	37
16	ASSEMBLY OF BLADE (AUXILIARY BOOM)	39
17	SCRAPER BLOCK LINK CHAIN (AUXILIARY BOOM)	41
18	SCRAPER DRIVE SHAFT ASSLY. (AUXILIARY BOOM)	43
19	SCRAPER DRIVE ASSEMBLY (AUXILIARY BOOM)	46
20	TAKE-UP UNIT ASSEMBLY (AUXILIARY BOOM)	49

ELECON EPC PROJECTS LIMITED

SR. NO	DESCRIPTION	PAGE NO
21	DRIVE SHAFT ASSEMBLY TO BRIDLE	52
22	CHAIN TENSIONING UNIT AT BRIDLE	56
23	TORQUE ARM FOR SCRAPER DRIVE (AUX. BOOM)	58
24	SHEAVE SUPPORT BRACKET FOR MAIN BOOM	60
25	ARRANGEMENT OF WIRE ROPE (MAIN BOOM)	62
26	SUSPENSION FOR SCRAPER MAIN BOOM	64
27	SUSPENSION SHAFT WITH BEARING (MAIN BOOM)	66
28	UPPER SHEAVE SUPPORT BRACKET (AUX. BOOM)	68
29	ARRANGEMENT OF WIRE ROPE (AUXILIARY BOOM)	71
30	LOWER SHEAVE SUPP. BRACKET (AUX. BOOM)	73
31	SUSPENSION FOR AUXILIARY BOOM	75
32	SUSPENSION SHAFT WITH BEARING (AUX. BOOM)	77
33	SUSPENSION FOR BRIDLE (AUXILIARY BOOM)	79

DRG.NO. T09798/OS ISSUE △

DO NOT SCALE

IF IN DOUBT ASK

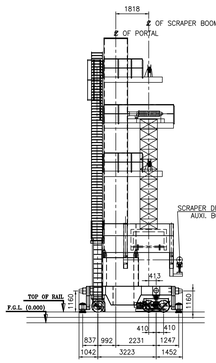

VIEW FROM ARROW–A

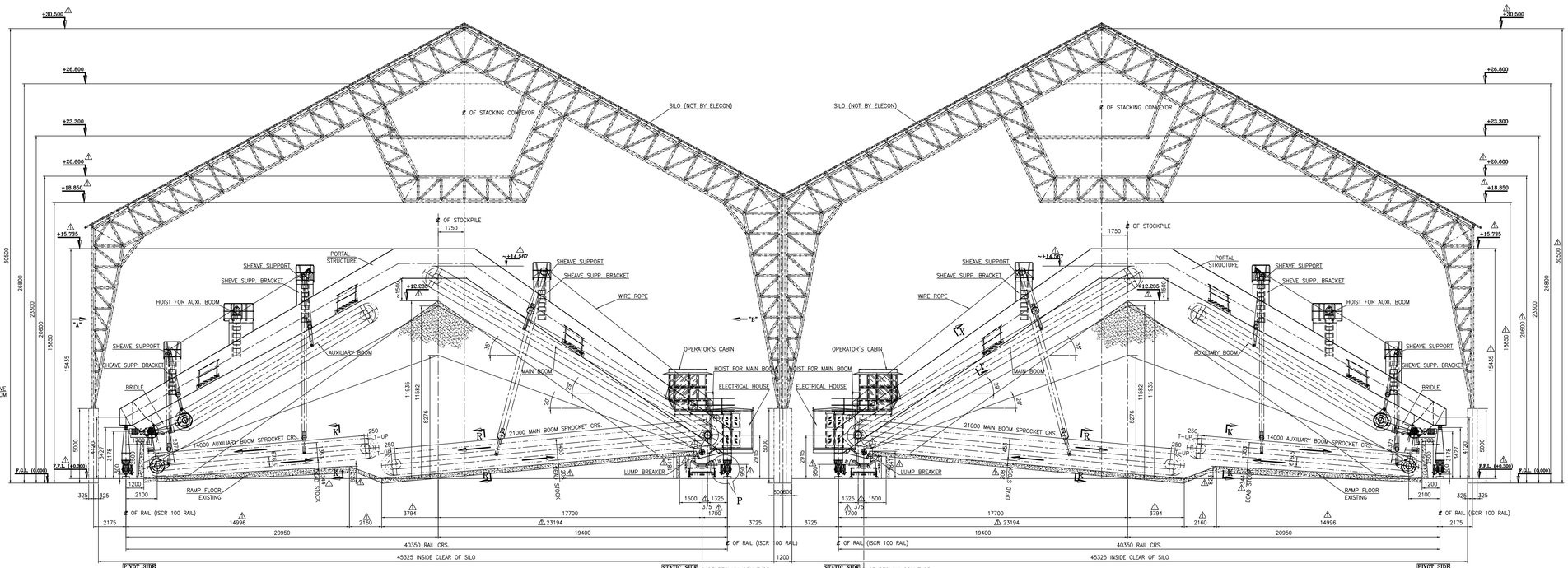

ELEVATION HM/573

ELEVATION HM/575

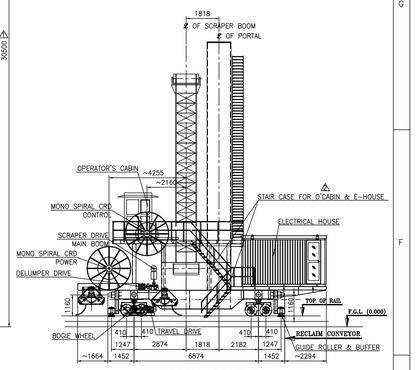

VIEW FROM ARROW–B

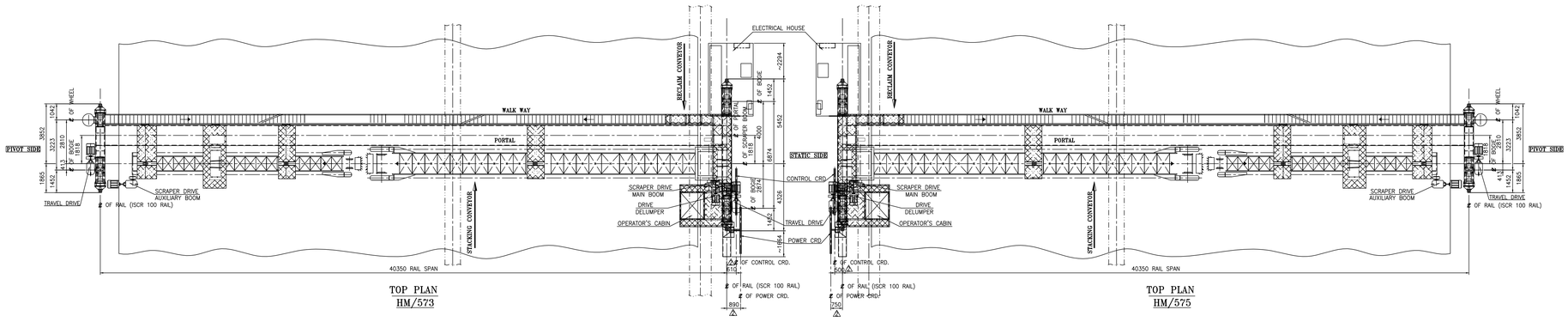

TOP PLAN HM/573

TOP PLAN HM/575

IN SCOPE OF M/S IFFCO:
1) ALL CIVIL WORK INCLUDING DESIGN
2) SILO BUILDING AND SILO FLOOR

TECHNICAL SPECIFICATION OF HM/573 & HM/575

[A] GENERAL DATA :
- TYPE OF MACHINE : FULL PORTAL TYPE SCRAPER RECLAIMER WITH INDEPENDENT MAIN AND AUXILIARY BOOM
- MATERIAL TO BE HANDLED : NPK / DAP
- MATERIAL DENSITY (T/CU.M) : 0.960
- MATERIAL SIZE (mm) : 10
- MOISTURE CONTENT : 5 TO 10 % Max.
- ANGLE OF REPOSE (DEGREE) : 20, 29, 35
- TEMP. IN SILO (DEG. C) : 48 Deg.
- SILO BUILDING WIDTH (M) : 45.000 (CLEAR INSIDE)
- NO. OF STOCKPILE : 1 NO.
- SILO BUILDING LENGTH (M) : 150.000 (C/C LENGTH)
- STOCKPILE LENGTH (M) : 129.000
- STOCKPILE HEIGHT (M) : 11.935
- STOCKPILE CAPACITY (T) : REFER DRG. NO. T09219/1
- RECLAIM CAPACITY (MTPH) : 300 (RATED) / 350 (DESIGN)

[B] RAIL TRAVEL MECHANISM :
- RAIL TYPE & SIZE : ISCR 100 (BY CLIENT)
- RAIL CENTERS : 40.350 M
- WHEEL DIAMETER : 630 MM
- NOS. OF TRAVEL WHEELS : 7 NOS.
  - (1) OF WHICH, POWERED : 4 NOS.
  - (2) OF WHICH, IDLE : 3 NOS.
- TRAVEL SPEEDS
  - (1) OPERATIONAL : 1 TO 2 M/Min.
  - (2) TRANSPORTATION (IDLE) : 10 M/Min.
- TRAVEL LENGTH : 127.150 M (OPERATIONAL) 134.262 M (MAX.)

DRIVE UNIT FOR TRAVEL MECHANISM
- NO. OF DRIVE : 2 NOS.
- MOTOR : 5.5 KW, 150 – 1500 RPM, WITH VVVF DRIVE, A.C. SQ. CAGE
- COUPLING : FLEXIBLE BRAKE COUPLING 200 MM DIA. BRAKE DRUM. MAKE : ELECON
- BRAKE : A.C. THRUSTOR OPERATED JAW BRAKE SUITABLE TO 200 MM DIA. BRAKE DRUM. THRUSTOR : ET–240 OR EQU. MAKE: ELECON
- GEAR : BEVEL HELICAL (HOLLOW OUTPUT SHAFT) WITH SHRINK DISC SIZE: PWD 18, 125:1 RATIO, RATING: 11 KW (NOMINAL) MAKE: ELECON.
- OPEN PAIR GEAR : PINION – 25 TEETH SPUR WHEEL – 57 TEETH

[C] MAIN SCRAPER BOOM :
- CHAIN SPEED : 0.70 M/SEC (Approx).
- CHAIN PITCH : 250 MM
- CHAIN TYPE : BLOCK LINK CHAIN STRENGTH : 500 KN FACTOR OF SAFETY : 10 MIN. MAKE : ROLCON
- DRIVE SPROCKET : 4 TEETH, 653 MM P.C.D.
- TAKE–UP SPROCKET : 653 MM P.C.D.
- SPROCKET CRS. : 21.000 M
- SIZE OF BLADE (L x B) : 1400 MM x 250 MM
- BLADE PITCH : 500 MM
- CHAIN TENSIONING TYPE : MANUAL TAKE–UP

DRIVE UNIT FOR SCRAPER CHAIN
- NO. OF DRIVE : 1 NO.
- MOTOR : 55 KW, 1500 RPM, A.C. SQ. CAGE MOTOR
- COUPLING △ : FLUID COUPLING WITH GEAR COUPLING TYPE & SIZE: CDR–R 420 + ED 1000 MAKE : ELECON
- GEAR : BEVEL HELICAL (HOLLOW OUTPUT SHAFT) WITH SHRINK DISC SIZE: KCH 315, 71:1 RATIO, RATING: 90 KW (NOMINAL) MAKE: ELECON.

BOOM LUFFING MECHANISM
- HOISTING SPEED
  - (1) FAST HOISTING (IDLE) : 12.0 M/MIN
  - (2) MICRO (OPERATIONAL) : 1.2 M/MIN
- MOTOR : 1 x 15 KW, A.C. VVVF DRIVE
- BRAKE : D.C. EM DISC TYPE
- WIRE ROPE
  - (1) SIZE : 16mm DIA., 6 x 36 CONT. G.I. STEEL CORE WIRE ROPE
  - (2) BREAKING FORCE : 161 KN
  - (3) STANDARD : IS 2266

[D] AUXILIARY SCRAPER BOOM :
- CHAIN SPEED : 0.70 M/SEC (Approx).
- CHAIN PITCH : 250 MM
- CHAIN TYPE : BLOCK LINK CHAIN STRENGTH : 500 KN FACTOR OF SAFETY : 10 MIN. MAKE : ROLCON
- DRIVE SPROCKET : 4 TEETH, 653 MM P.C.D.
- TAKE–UP SPROCKET : 653 MM P.C.D.
- SPROCKET CRS. : 14.000 M
- SIZE OF BLADE (L x B) : 1000 MM x 200 MM
- BLADE PITCH : 500 MM
- CHAIN TENSIONING TYPE : MANUAL TAKE–UP

DRIVE UNIT FOR SCRAPER CHAIN
- NO. OF DRIVE : 1 NO.
- MOTOR : 30 KW, 1500 RPM, A.C. SQ. CAGE MOTOR
- COUPLING △ : FLUID COUPLING WITH GEAR COUPLING TYPE & SIZE: CDR–R 370 + ED 1000 MAKE : ELECON
- GEAR : BEVEL HELICAL (HOLLOW OUTPUT SHAFT) WITH S.D. SIZE: KCH 200, 28:1 RATIO, RATING: 48 KW (NOMINAL) MAKE: ELECON.

BOOM LUFFING MECHANISM
- HOISTING SPEED
  - (1) FAST HOISTING (IDLE) : 12.0 M/MIN
  - (2) MICRO (OPERATIONAL) : 1.2 M/MIN
- MOTOR : 1 x 15 KW, A.C. VVVF DRIVE
- BRAKE : D.C EM DISC TYPE
- WIRE ROPE
  - (1) SIZE : 12mm DIA., 6 x 36 CONT. G.I. STEEL CORE WIRE ROPE
  - (2) BREAKING FORCE : 90 KN
  - (3) STANDARD : IS 2266

[E] LUBRICATION SYSTEM :
- MAIN BOOM SIDE : MOTORISED LUBRICATION 0.75 KW x 1500 RPM
- AUXILIARY BOOM SIDE : MOTORISED LUBRICATION 0.75 KW x 1500 RPM

[F] ELECTRICAL HOUSE :
- LOCATION : HEAD BEAM–A SIDE WITH 1.5 TONE SPLIT A.C. UNIT

[G] OPERATOR CABIN :
- LOCATION : HEAD BEAM–A SIDE WITH 1.5 TONE SPLIT A.C. UNIT

[H] CABLE REELING DRUMS :
- POWER C.R.D. : MONOSPIRAL TYPE MAKE : ELECON
- CONTROL C.R.D. : MONOSPIRAL TYPE MAKE : ELECON

[I] DELUMPER :
- CAPACITY : 50 TPH (RATED) / 60 TPH (DESIGN)
- FEED SIZE : 2.5 MM TO 175 MM
- MOTOR : 1 x ~22 KW, 1000 RPM, A.C SQ. CAGE MOTOR
- ROTOR : DIAMETER – 400 MM
- PULLY : 1 NO. 315 DIAMETER 1 NO. 400 DIAMETER

[J] SKIRT PLATE :
- SEALING RUBBER : 10 mm THK NATURAL RUBBER

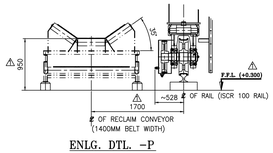

ENLG. DTL. –P

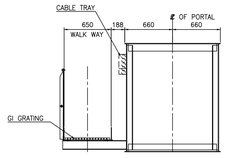

VIEW ON–XX

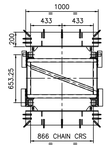

VIEW ON–KK △

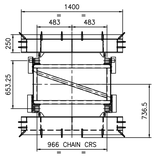

VIEW ON–RR △

REFERENCE DRAWINGS:

1) RAIL & RAIL FIXING ARRGT. : T09800/0 & T09801/0
2) WHEEL LOAD DATA : T09802/3
3) PERMISSIBLE TOLERANCE FOR RAIL LAYING : T09803/4
4) STOCKPILE CAPACITY CALCULATION : T09219/1
5) LAYOUT OF MACHINE LOCATION/ORIENTATION : T09804/0

DRAWING FOR DISTRIBUTION

ELE.	STRU	MECH	SEC	NAME	DATE	ISSUE	AMENDMENTS
							AND C.L. OF CRD'S REVISED IN TOP PLAN.
							AND MAIN & AUX. BOOM DRIVE COUPLING TYPE REVISED.
		RPJ	RPJ	RKP	24/08/12	△	STAIR CASE ADDED IN VIEW "B" INSTEAD OF MONKEY LADDER
		RPJ	RPJ	RKP	01/08/12	△	RAMP FLOOR & LEVEL REVISED AS PER MOM DTD. 26.07.12.

DRAWN	R. K. Patel	30/06/12
CHECK	R. R. Panchal	03/07/12
SEC.		
MEC	R. P. Jadio	03/07/12
STR.		
ELE.		

SCALE : 1:122

IFFCO INDIAN FARMERS FERTILISER CO-OP. LTD. PARADEEP

INDIAN FARMERS FERTILISER COOPERATIVE LIMITED.
(PARADEEP UNIT)
VIII - MUSADIA, PARADEEP
DIST. - JAGATSINGHPUR, ORISSA
PIN CODE : 754 142 (INDIA)

G.A. OF FULL PORTAL SCRAPER RECLAIMER
TYPE:– VP–2, 40.350 m RAIL CRS

MAIN GR. NO. — ELECON

THIS DRAWING IS THE PROPERTY OF ELECON ENGINEERING CO. LTD. VALLABH VIDYANAGAR GUJARAT. LOANED TO THE RECIPIENT WHO AGREES THAT IT SHALL NOT BE GIVEN OUT COPIED OR DUPLICATED FOR THE USE OF ANOTHER BUT USED ONLY BY THE RECIPIENT FOR THE PURPOSE OF MAINTAINING THE EQUIPMENT TO WHICH IT REFERS.

SUB GR. NO. — ORDER NO. CO/2281 — M/C NO. HM/573 HM/575 — DRG. NO. T09798/OS — ISSUE △

T09219/0

USER SIZE 1165×820

DO NOT SCALE

IF IN DOUBT ASK

ISSUE	DRG NO.

(6) SPACER DRG. NO. T05739/4

(7) SPACER DRG. NO. T09814/4

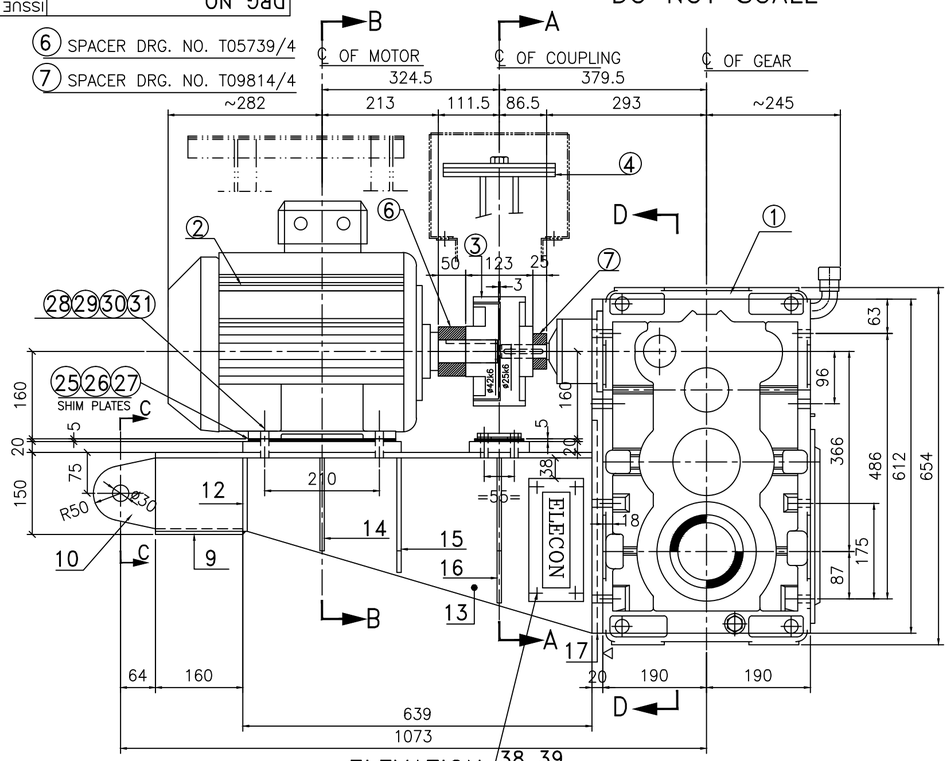

ELEVATION

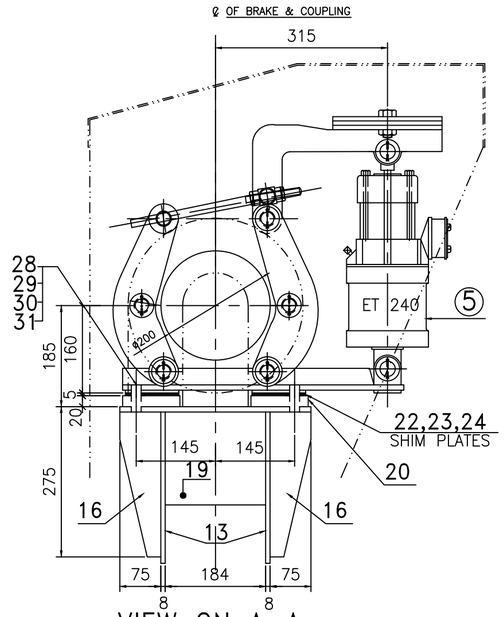

VIEW ON A–A

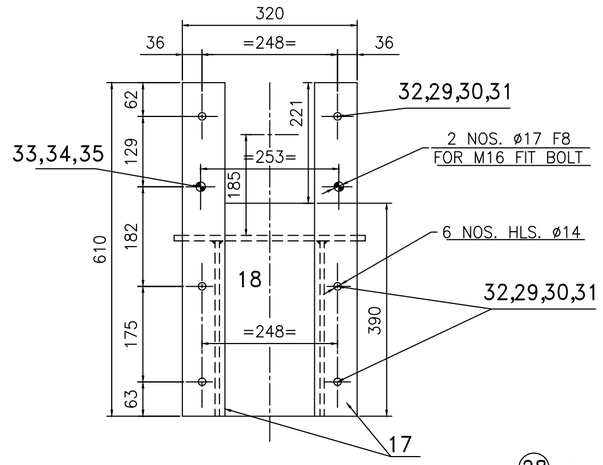

VIEW ON D–D

(28) HEX. BOLT M12 X 75 IS:1364 S 8.8

(29) HEX. NUT M12 IS:1364 S8.8

(30) SPRING WASHER B–12 IS:3063

(31) PLAIN WASHER A–12 IS:2016

32 HEX. BOLT M12 X 65 IS:1364 S 8.8

33 HEX.FIT BOLT M16 X 65 IS:3640 S8.8

34 SPRING WASHER B–16 IS:3063

35 HEX. NUT M16 IS:1364 S8.8

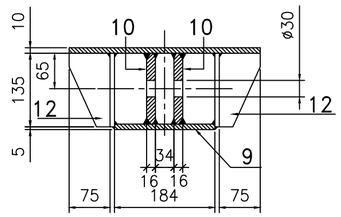

VIEW ON C–C

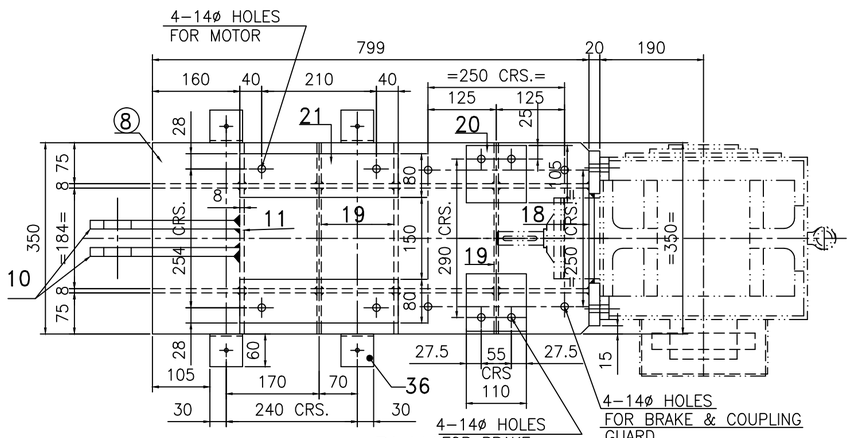

PLAN

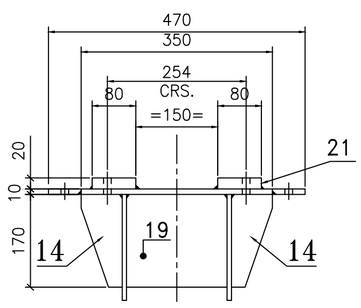

VIEW ON B–B

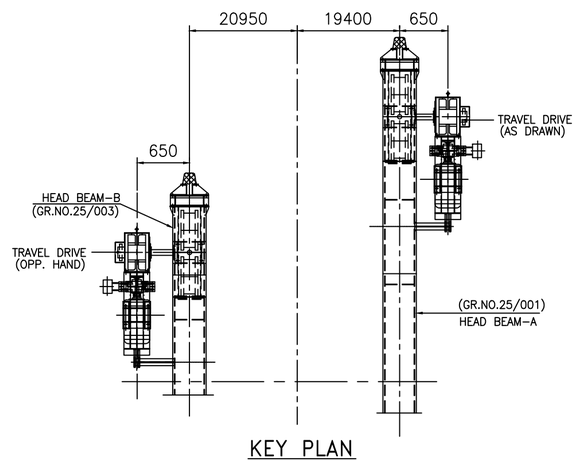

KEY PLAN

(1) (37) GEAR:– BEVEL HELICAL HOLLOW SHAFT GEAR UNIT.
TYPE:– PWD 18–S50–G52–R125:1–Z0 – L.H.
PWD 18–S50–G51–R125:1–Z0 – R.H.
RATIO:– 125:1 WITH SHRINK DISC : 110–71
DRG.NO. : 516–00–3426 (L.H) ,
DRG.NO. : 516–00–3425 (R.H) , MAKE:– ELECON.

(2) MOTOR:– 5.5 KW. 150–1500 RPM. AC. SQ.CAGE B3 MOUTING.
FRAME SIZE:– ND160M [WVF]
MAKE:– CGL, DRG. NO. : ND160B3,V6TOP.

(3) COUPLING:– FLEXIBLE BRAKE COUPLING TYPE: FBC–200 WITH 200 mm DIA. BRAKE DRUM.
MAKE:– ELECON.

(4) BRAKE:– A.C.THRUSTER OPERATED JAW BRAKE SUTABLE TO 200mm DIA BRAKE DRUM:– ADD.WT. PLATE – 2 NOS.
MAKE:– ELECON DRG. NO. : 29–191/W SR. NO. 02

(5) THRUSTOR:– TYPE – ET–240
MAKE – ELECTROMAG OR EQUI.

ELE.	STRU	MECH	SEC	NAME	DATE	ISSUE	AMENDMENTS

DRAWN	R. K. Patel	30/11/12
CHECK		
APPROVED SEC.		
APPROVED MEC		
APPROVED STR.		
APPROVED ELE.		
SCALE :		

ASSEMBLY OF TRAVEL DRIVE

THIS DRAWING IS THE PROPERTY OF ELECON ENGINEERING CO. LTD. VALLABH VIDYANAGAR GUJARAT. LOANED TO THE RECIPIENT WHO AGREES THAT IT SHALL NOT BE GIVEN OUT COPIED OR DUPLICATED FOR THE USE OF ANOTHER BUT USED ONLY BY THE RECIPIENT FOR THE PURPOSE OF MAINTAINING THE EQUIPMENT TO WHICH IT REFERS.

MAIN GR. NO. 01

SUB GR. NO. 006

ELECON

ORDER NO.

M/C NO.

DRG. NO. T09813/2M

ISSUE

USER SIZE 570x395

ELECON EPC
ELECON EPC PROJECTS LIMITED

TRAVEL DRIVE ASSEMBLY

Group No. : 01/006 Drg.No. : T09813/2

Sr.No.	Description	Qty.	Part No.
1	Bevel Helical Reductin Gear Unit with Hollow Shaft Type : PWD – 18, Ratio 125 : 1 Shrink Disc Type : 110-71 Handing : 1 no. R.H. & 1 no. L.H. Drg.No. : 516-00-3425 (R.H.) 516-00-3426 (L.H.) Make : Elecon	1	T09813/2
2	Motor 5.5 KW x 150-1500 RPM (VVVF) AC SQ. Cage Frame Size : ND 160 M Drg. No. : ND160B3,V6TOP Make : CGL.	1	T09813/2
3	Flexible Coupling Type & Size : FBC 200 Bore : 42mm Motor Side 25mm Gear Side Drg. No. : 47-74-0449 Mkae : Elecon	1	T09813/2
4	Thrustor Operated Jaw Brake Size : 200 Dai. x 75 Face Nos. of Additional Wt. Plate = 2 Nos. Make : Elecon	1	29-191/W Sr.No. 02
5	Thrustor Type & Size : ET – 240 Thrust : 18 Kg. Stroke : 50 mm Make : Electromag or Equiv.	1	T09813/2
6	Spacer 90 O/D x 42 I/D x 50 Thk	1	T05739/4
7	Spacer 70 O/D x 25 I/D x 25 Thk	1	T09814/4
8 to 21	Drive Base Frame	1	T09813/2
22	Shim Plate	4	T09813/2

ELECON EPC
ELECON EPC PROJECTS LIMITED

Group No. : 01/006 Drg.No. : T09813/2

Sr.No.	Description	Qty.	Part No.
23	Shim Plate	8	T09813/2
24	Shim Plate	2	T09813/2
25	Shim Plate	4	T09813/2
26	Shim Plate	8	T09813/2
27	Shim Plate	2	T09813/2
28	Hex. Bolt M12 x 75 Lg.	8	IS:1364 S8.8
29	Hex. Nut M12	14	IS:1364 S8.8
30	Spring Washer B12	14	IS:3063
31	Punch Washer A12	14	IS:2016
32	Hex. Bolt M12 x 75 Lg.	6	IS:1364 S8.8
33	Fitted Hex. Bolt M16 x 65Lg.	2	IS:3640 S8.8
34	Spring Washer B16	2	IS:3063
35	Hex. Nut M16	2	IS:1364 S8.8
36	Plate	4	T09813/2
38	Name Plate	1	G05642/3
39	Alu. Hammer Drive Rivet 3Dai x 6 Lg.	4	T09813/2

DRIVE ASSEMBLY : ONE NO. L.H.
: ONE NO. R.H

DO NOT SCALE

IF IN DOUBT ASK

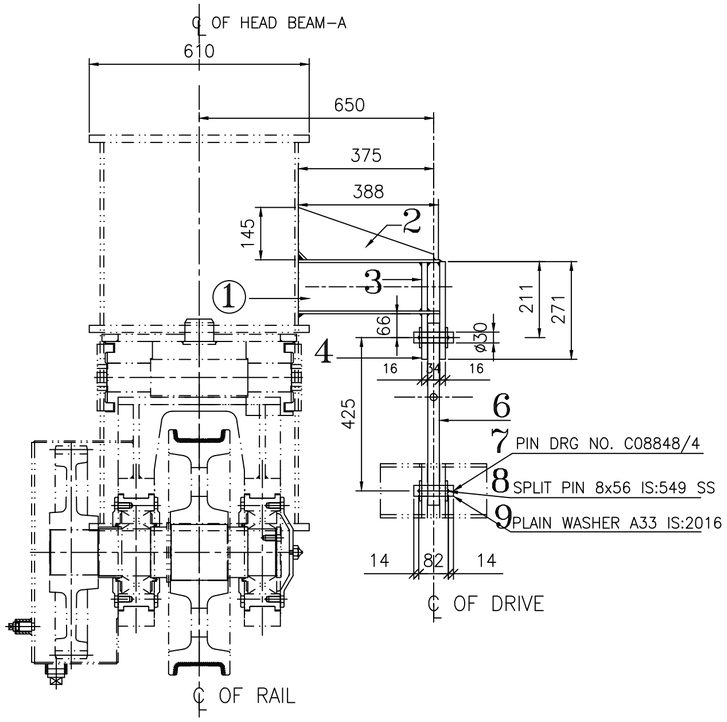

VIEW ON A-A

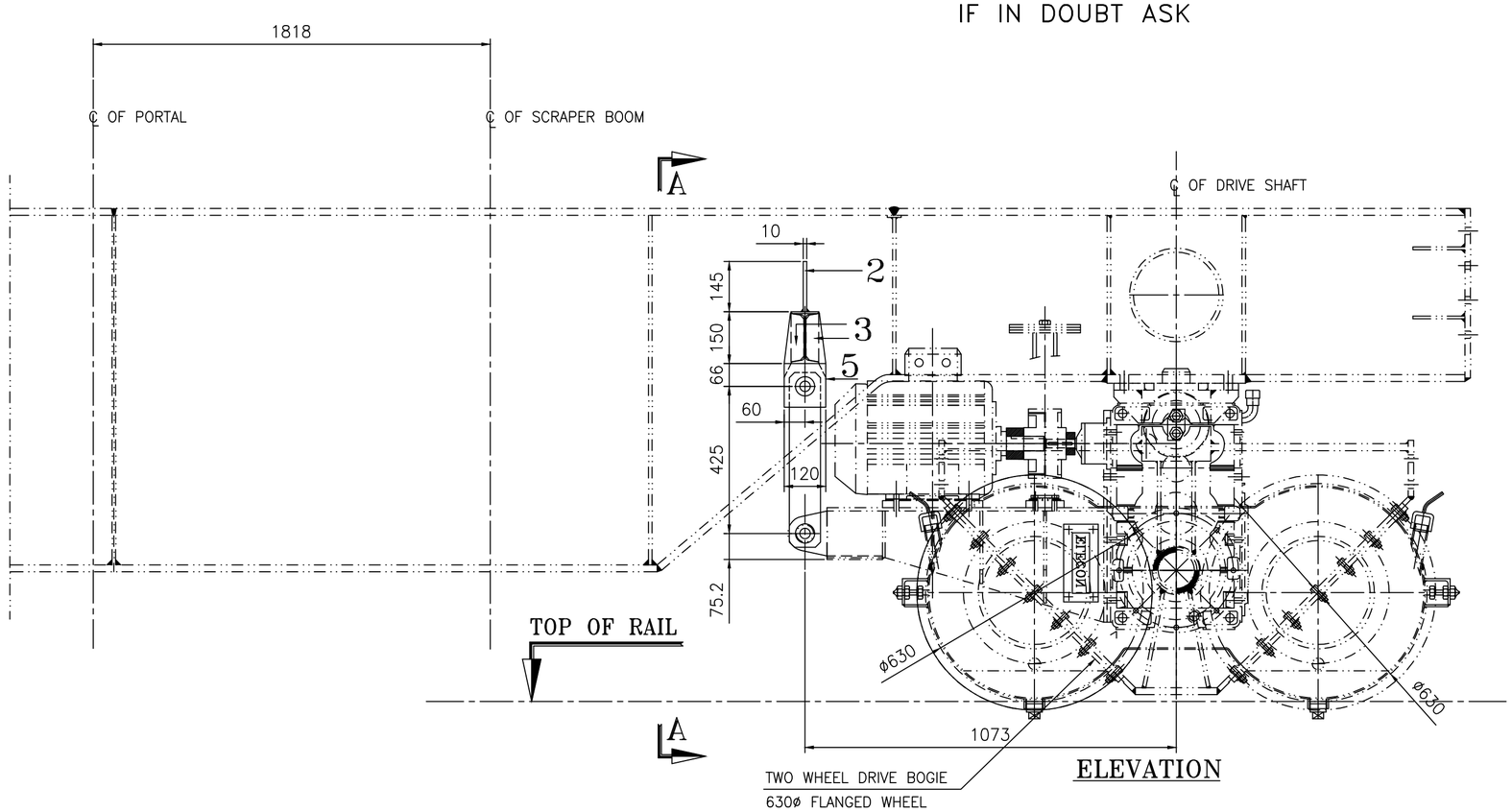

ELEVATION

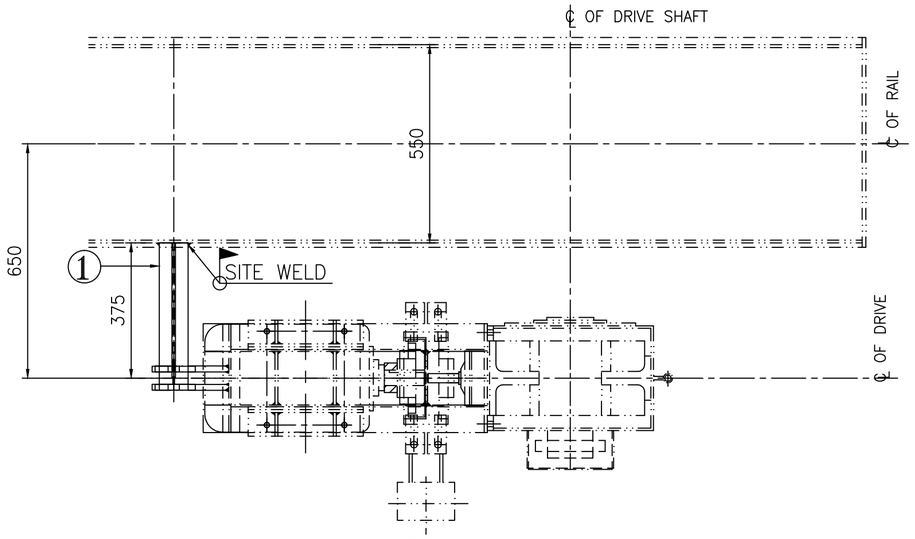

PLAN

ELE.	STRU	MECH	SEC	NAME	DATE	ISSUE	AMENDMENTS

DRAWN		R. K. Patel	30/11/12
CHECK			
APPROVED	SEC.		
	MEC		
	STR.		
	ELE.		

SCALE :

TORQUE ARM SUPPORT-I FOR TRAVEL DRIVE

(AT HEAD BEAM-A)

THIS DRAWING IS THE PROPERTY OF ELECON ENGINEERING CO. LTD. VALLABH VIDYANAGAR GUJARAT. LOANED TO THE RECIPIENT WHO AGREES THAT IT SHALL NOT BE GIVEN OUT COPIED OR DUPLICATED FOR THE USE OF ANOTHER BUT USED ONLY BY THE RECIPIENT FOR THE PURPOSE OF MAINTAINING THE EQUIPMENT TO WHICH IT REFERS.

MAIN GR. NO. 01

SUB GR. NO. 008

ORDER NO.

M/C NO.

DRG. NO. T09842/2M

ISSUE

ELECON

USER SIZE 570x395

ELECON EPC
ELECON EPC PROJECTS LIMITED

TORQUE ARM SUPPORT-I

Group No. : 01/008 Drg.No. : T09842/2

Sr.No.	Description	Qty.	Part No.
1 to 6	Steel Structure	-	T09842/2
7	Pin 30 Dia x 110 Lg.	2	C08848/4
8	Split Pin 8 Dia x 56 Lg.	4	T09842/2
9	Punched Washer A33	4	IS:2016

DO NOT SCALE

IF IN DOUBT ASK

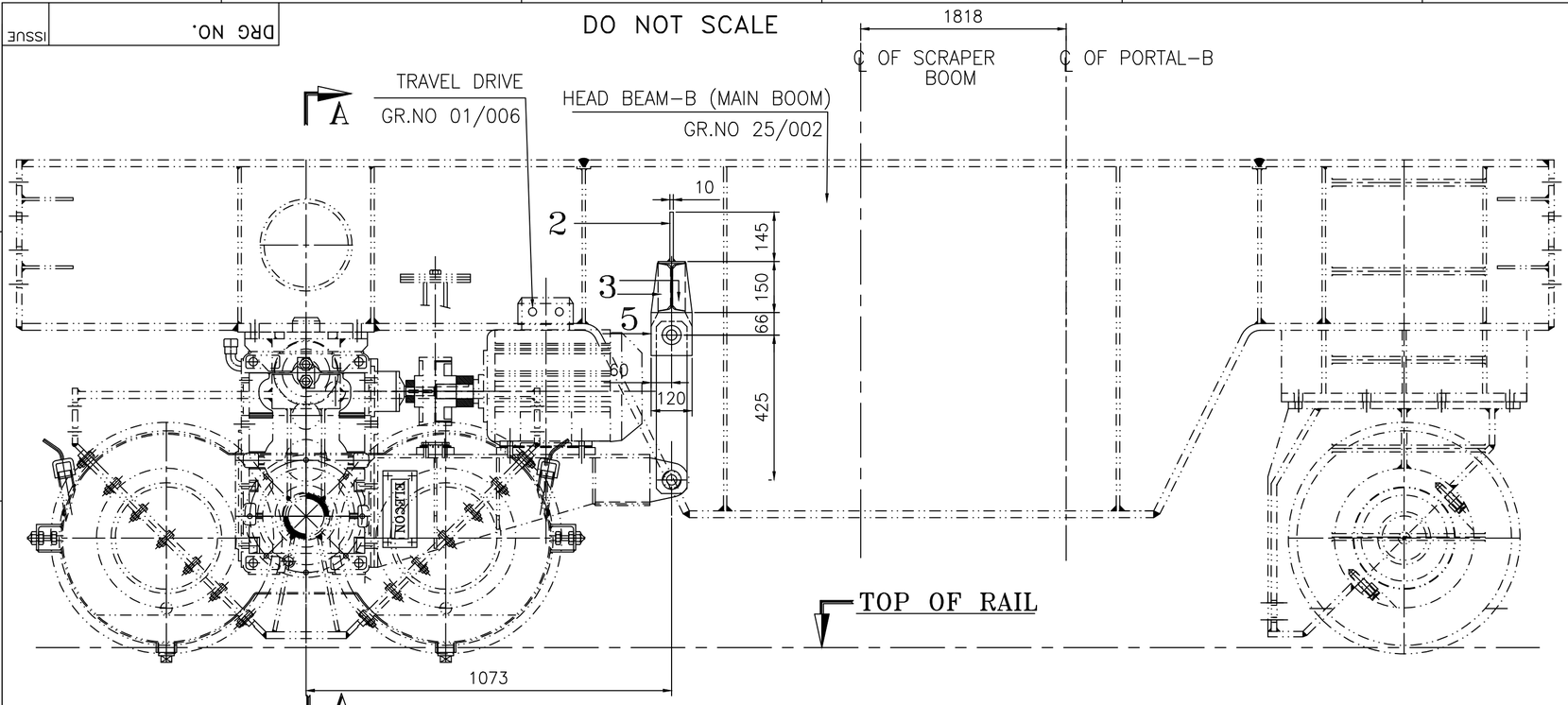

ELEVATION

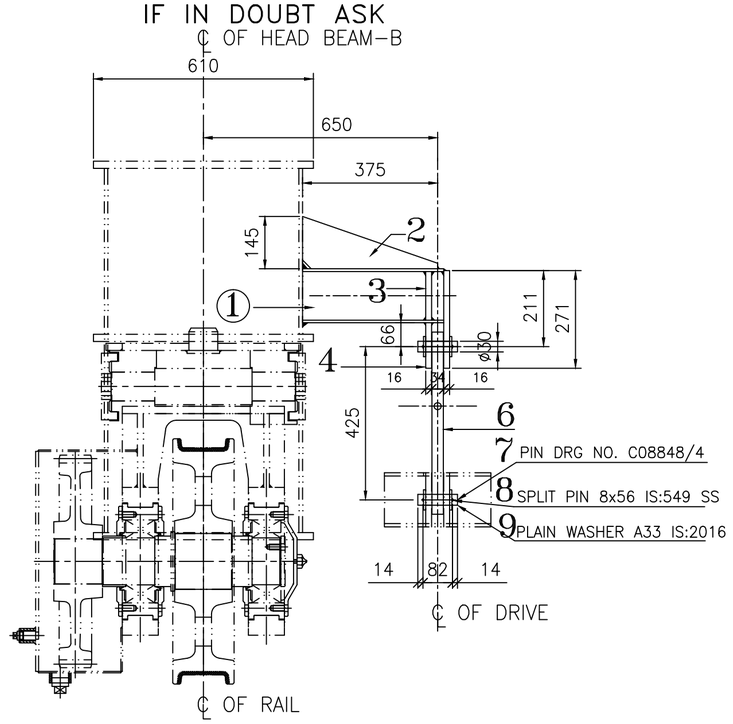

VIEW ON A-A

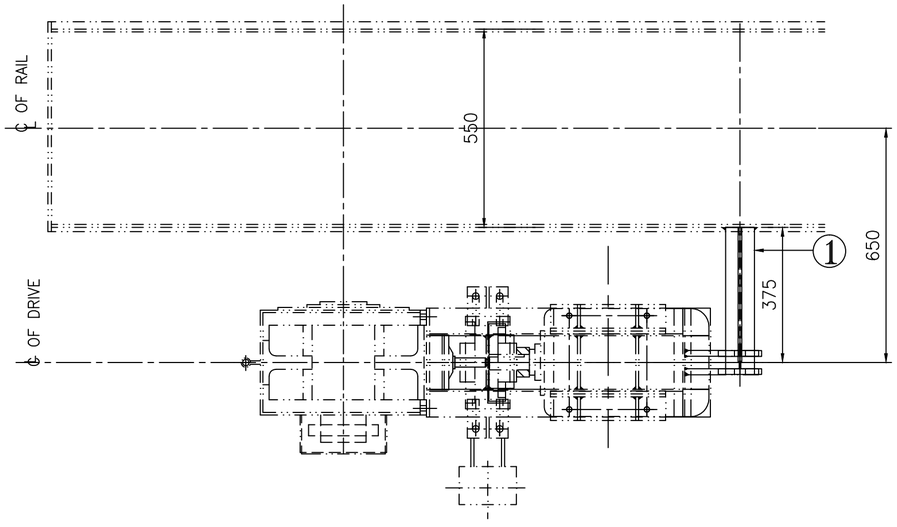

PLAN

								DRAWN	R. K. Patel	30/11/12
								CHECK		
								APPROVED SEC.		
								MEC		
								STR.		
								ELE.		
ELE.	STRU	MECH	SEC	NAME	DATE	ISSUE	AMENDMENTS	SCALE :		

TORQUE ARM SUPPORT-II FOR TRAVEL DRIVE
(AT HEAD BEAM -B)

THIS DRAWING IS THE PROPERTY OF ELECON ENGINEERING CO. LTD. VALLABH VIDYANAGAR GUJARAT. LOANED TO THE RECIPIENT WHO AGREES THAT IT SHALL NOT BE GIVEN OUT COPIED OR DUPLICATED FOR THE USE OF ANOTHER BUT USED ONLY BY THE RECIPIENT FOR THE PURPOSE OF MAINTAINING THE EQUIPMENT TO WHICH IT REFERS.

MAIN GR. NO. 01

SUB GR. NO. 009

ELECON

ORDER NO.

M/C NO.

DRG. NO. T09843/2M

ISSUE

DRG NO. ISSUE

USER SIZE 570x395

ELECON EPC PROJECTS LIMITED

TORQUE ARM SUPPORT-II

Group No. : 01/009 Drg.No. : T09843/2

Sr.No.	Description	Qty.	Part No.
1 to 6	Structural Plate	-	T09843/2
7	Pin 30 Dia x 110 Lg.	2	C08848/4
8	Split Pin 8 Dia x 56 Lg.	4	T09843/2
9	Punched Washer A33	4	IS:2016

DRG.NO T09473/2 ISSUE

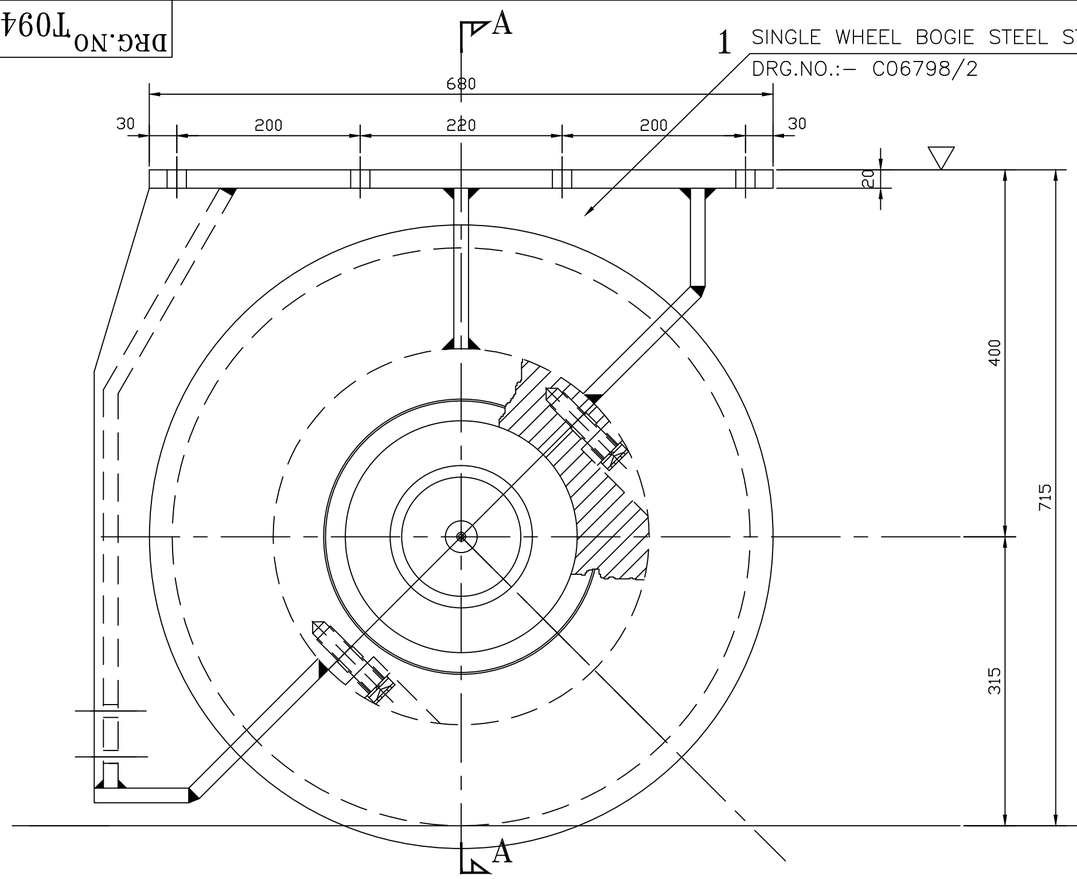

1 SINGLE WHEEL BOGIE STEEL STRUCTURE
DRG.NO.:– C06798/2

Elevation

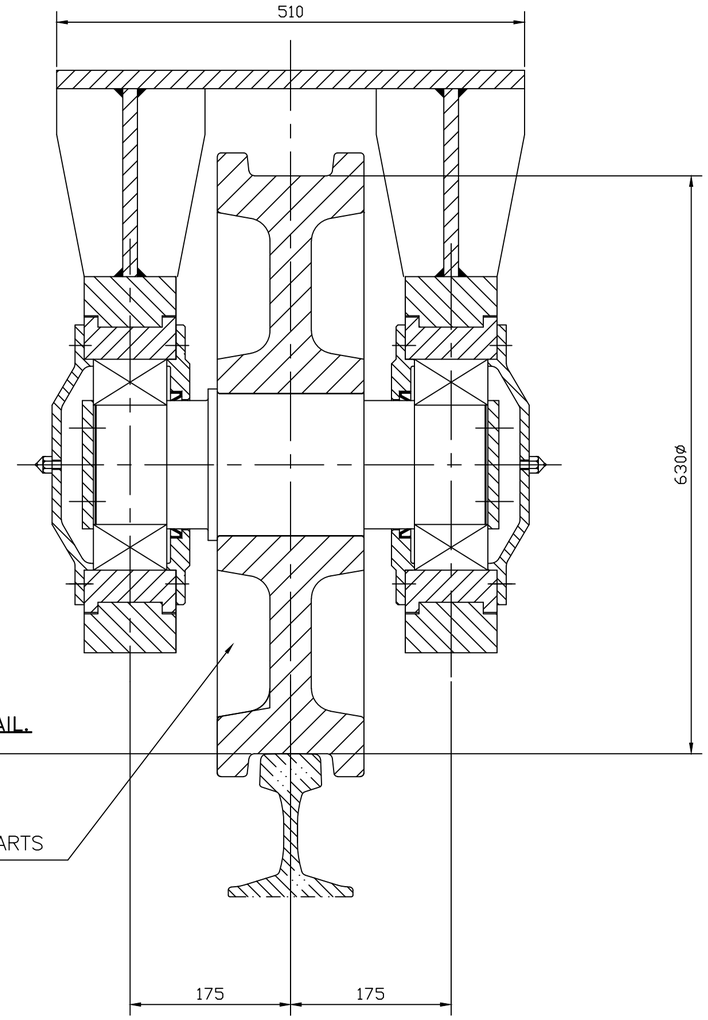

2 SINGLE WHEEL BOGIE MACHINE PARTS
DRG.NO.:– T09474/2

Section.– "A–A"

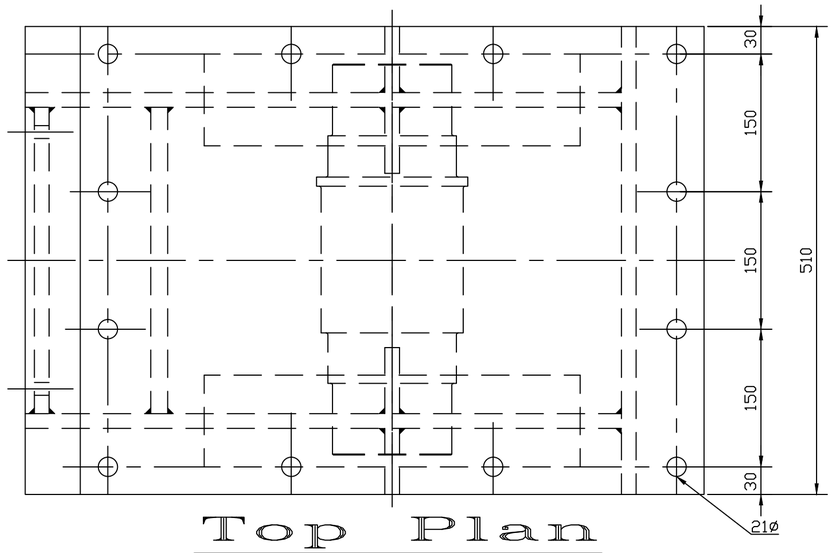

Top Plan

ELE.	STRU.	MECH.	SEC.	DATE	ZONE	ISSUE	AMENDMENTS

DRAWN	R. K. Patel	09/04/12	
CHECKED	R. R. Panchal	09/04/12	
APPROVED SEC.	R. P. Jaria	09/04/12	
APPROVED MECH.			
APPROVED STRU.			
APPROVED ELE.			

SCALE :– 1:5

ASSLY OF SINGLE WHEEL BOGIE

THIS DRAWING IS THE PROPERTY OF ELECON ENGINEERING CO. LTD. VALLABH VIDYANAGAR GUJARAT. LOANED TO THE RECIPIENT WHO AGREES THAT IT SHALL NOT BE GIVEN OUT COPIED OR DUPLICATED FOR THE USE OF ANOTHER BUT USED ONLY BY THE RECIPIENT FOR THE PURPOSE OF MAINTAINING THE EQUIPMENT TO WHICH IT REFERS.

MAIN GR. NO.

SUB GR. NO.

ELECON

ORDER NO.

M/C NO.

DRG.NO. T09473/2

ISSUE

C21258/2

(USER SIZE 390x560)

DRG.NO T09474/2 ISSUE

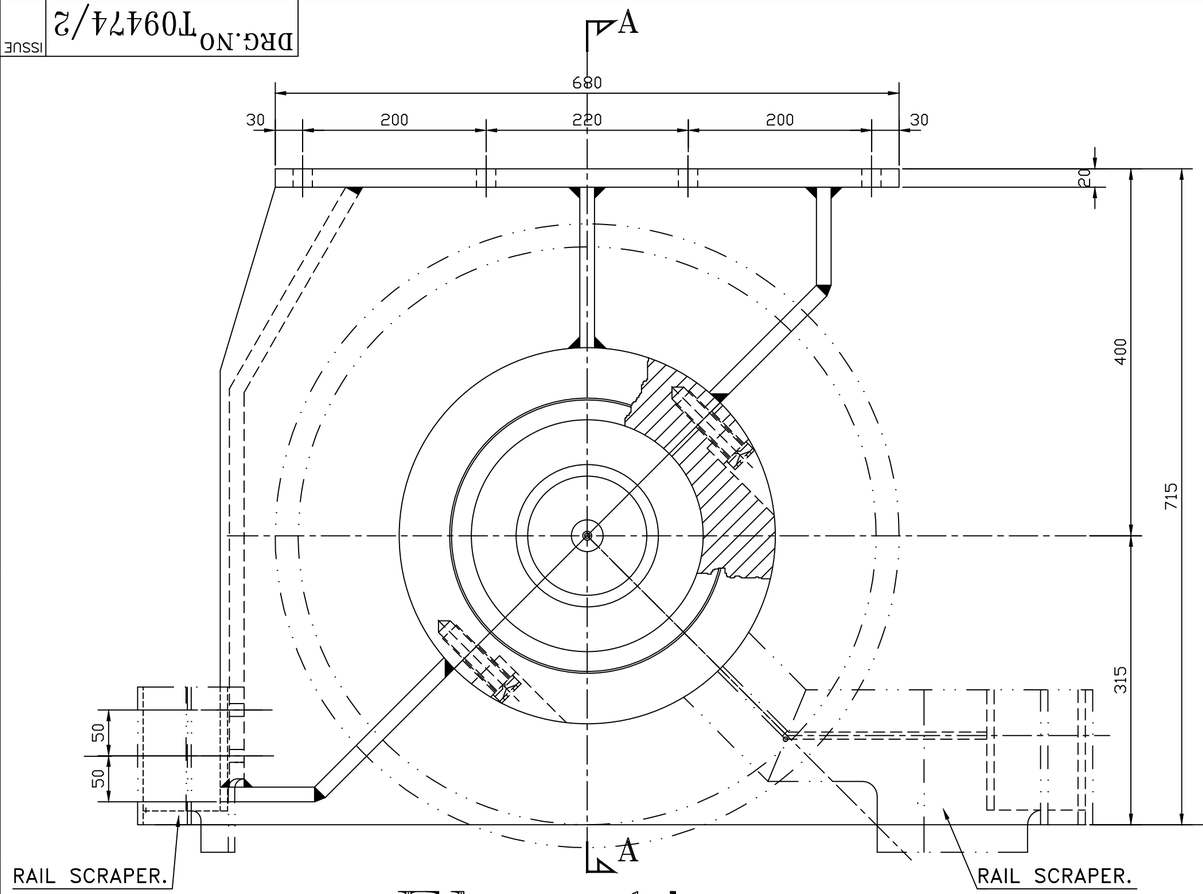

Elevation

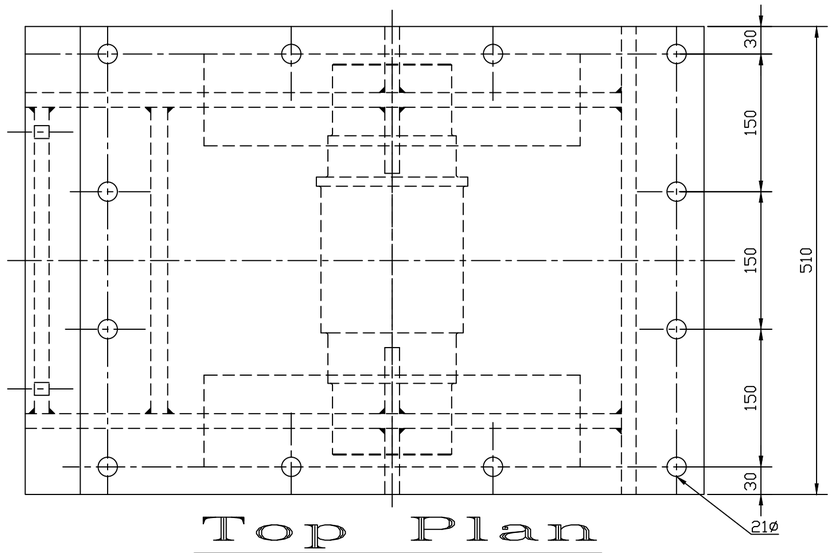

Top Plan

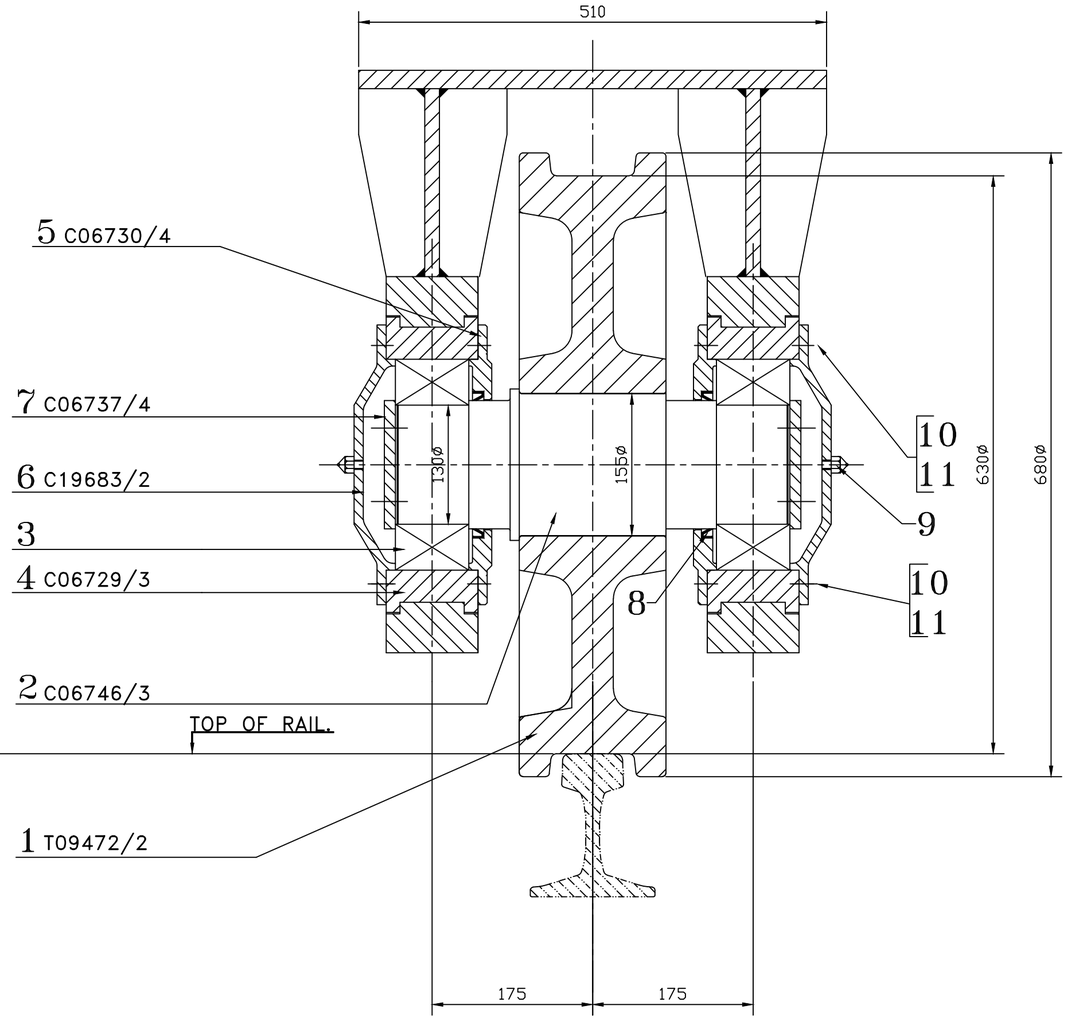

Section.– "A–A"

ELE.	STRU.	MECH.	SEC.	DATE	ZONE	ISSUE	AMENDMENTS

DRAWN		R. K. Patel	09/04/12
CHECKED		R. R. Panchal	09/04/12
APPROVED	SEC.	R. P. Jaria	09/04/12
	MECH.		
	STRU.		
	ELE.		

SCALE :– 1:5

Single Wheel Bogie 630ø

Wheel Machine Parts.

THIS DRAWING IS THE PROPERTY OF ELECON ENGINEERING CO. LTD. VALLABH VIDYANAGAR GUJARAT. LOANED TO THE RECIPIENT WHO AGREES THAT IT SHALL NOT BE GIVEN OUT COPIED OR DUPLICATED FOR THE USE OF ANOTHER BUT USED ONLY BY THE RECIPIENT FOR THE PURPOSE OF MAINTAINING THE EQUIPMENT TO WHICH IT REFERS.

MAIN GR. NO.

SUB GR. NO.

ELECON

ORDER NO.

M/C NO.

DRG.NO. T09474/2

ISSUE

C06793/2

(USER SIZE 390x560)

ELECON EPC PROJECTS LIMITED

ASSLY. OF SINGLE WHEEL BOGIE

Group No. : 01/009 Drg.No. : T09473/2

Sr.No.	Description	Qty.	Part No.
1	Single Wheel Bogie Steel Structure	1	C06798/2
2	Single Wheel Bogie Machine Part	1	T09474/2
2.1	630 Dia Bogie Wheel (CR 100 Rail)	1	T09472/2
2.2	Wheel Axle 165Dia x 426 Lg.	1	C06746/3
2.3	Sph. Roller Bearing	2	T09474/2
2.4	Bearing Housing	2	C06729/3
2.5	Bearing Cover	2	C06730/4
2.6	Bearing Cover	2	C19683/2
2.7	Locking Plate	2	C06737/4
2.8	Oil Seal	2	T09474/2
2.9	Grease Nipple 1/4" BSP	2	T09474/2
2.10	Hex. Screw M16 x 40 Lg.	30	T09474/2
2.11	Spring Washer B16	30	IS:3063

DRG NO. T09486/3 ISSUE

DO NOT SCALE

IF IN DOUBT ASK

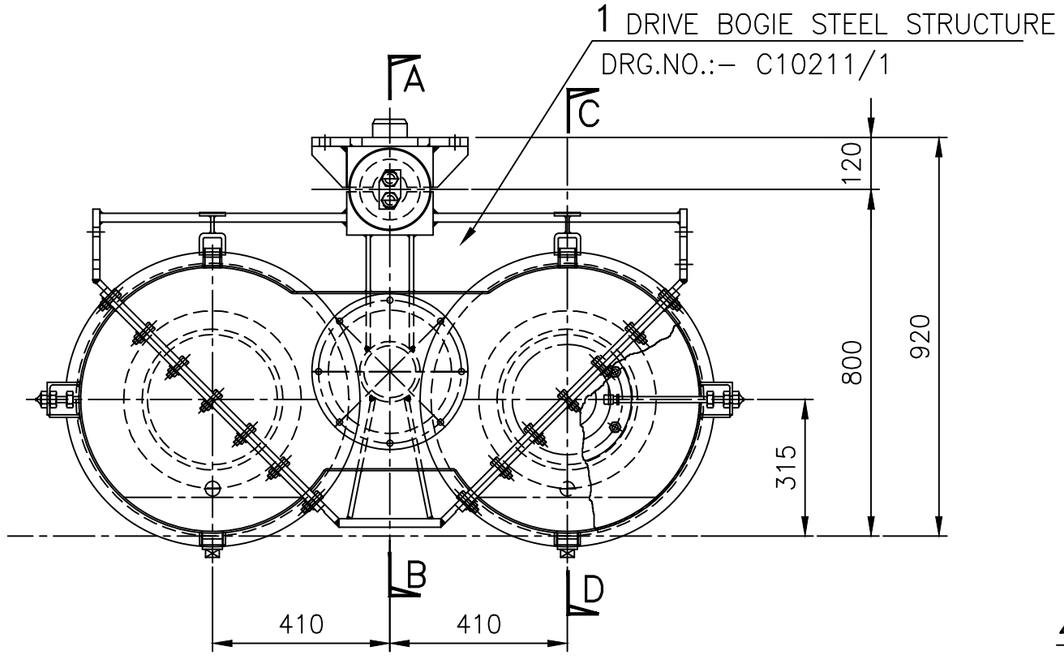

ELEVATION

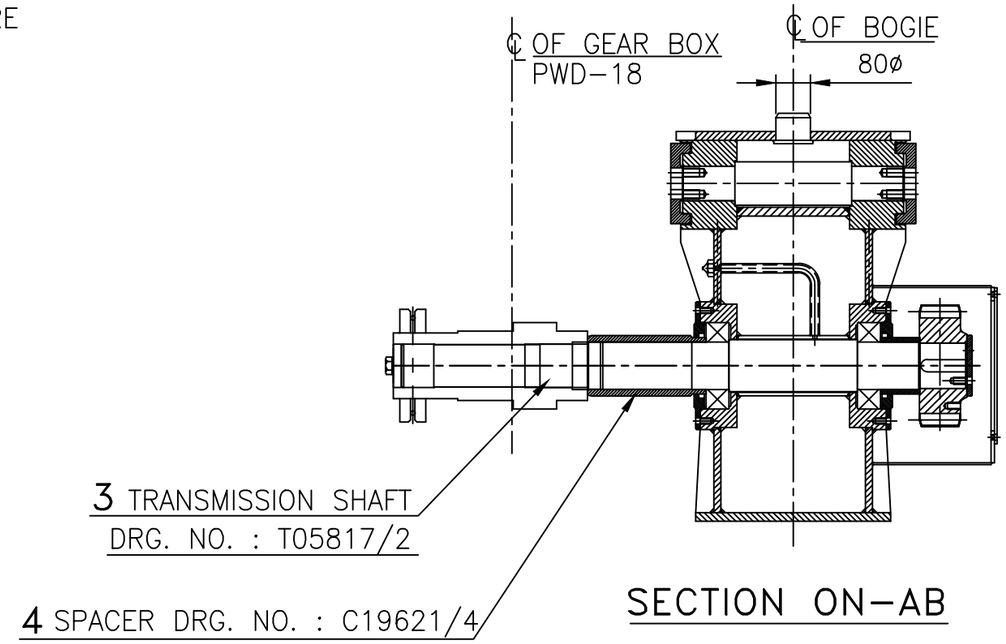

SECTION ON-AB

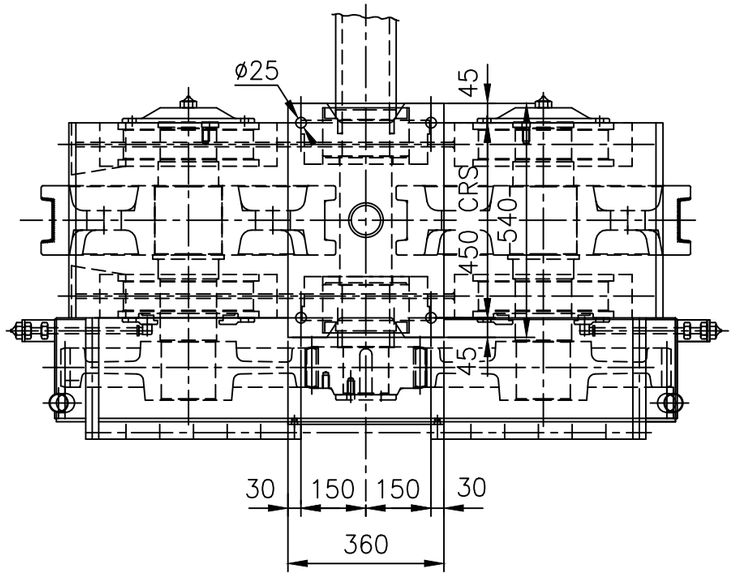

TOP PLAN

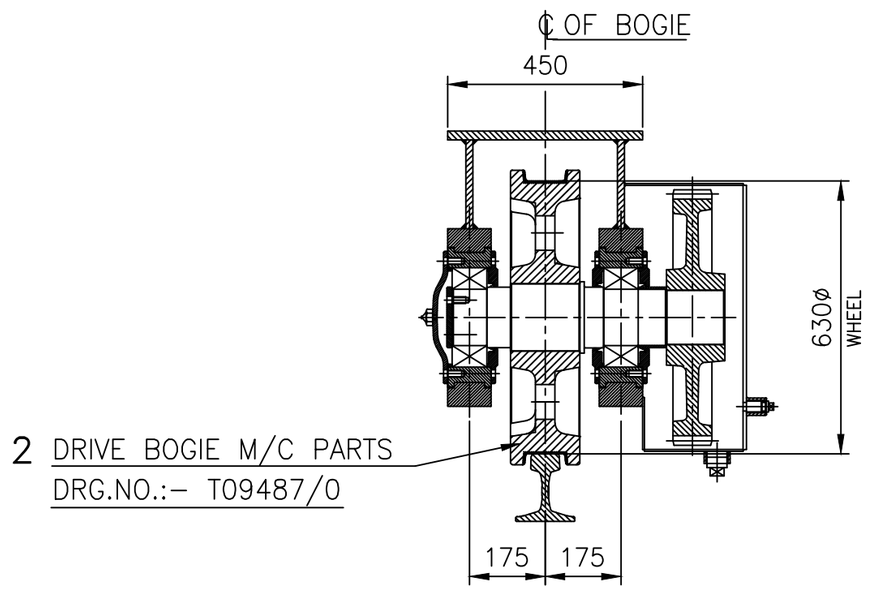

SECTION ON-CD

ISSUE	DATE	AMENDMENTS

THIS DRAWING IS THE PROPERTY OF ELECON ENGINEERING CO. LTD. LONAED TO THE RECIPIENT WHO AGREES THAT IT SHALL NOT BE GIVEN OUT. COPIED OR DUPLICATED FOR THE USE OF ANOTHER BUT USED ONLY BY THE RECIPIENT FOR THE PURPOSE OF MAINTAINING THE EQUIPMENT TO WHICH IT REFERS.

APPROVED			
DRAWN		R.K.PATEL	17/4/12
CHECKED		R.R.PANCHAL	17/4/12
	SEC.	R.P.JARIA	17/4/12
	MECH	R.P.JARIA	17/4/12
	STRU.		
	ELEC.		

ASSLY OF DRIVE BOGIE

ORDER NO.	M/C. NO.	SCALE
CO/2223	HM/545	1:15

ELECON

MAIN GR.NO. 01

SUB GR.NO. 072

DRG. NO. T09486/3

ISSUE

T05815/3, C21250/3, T09375/3

USER SIZE: 395 x 275

DO NOT SCALE

IF IN DOUBT ASK

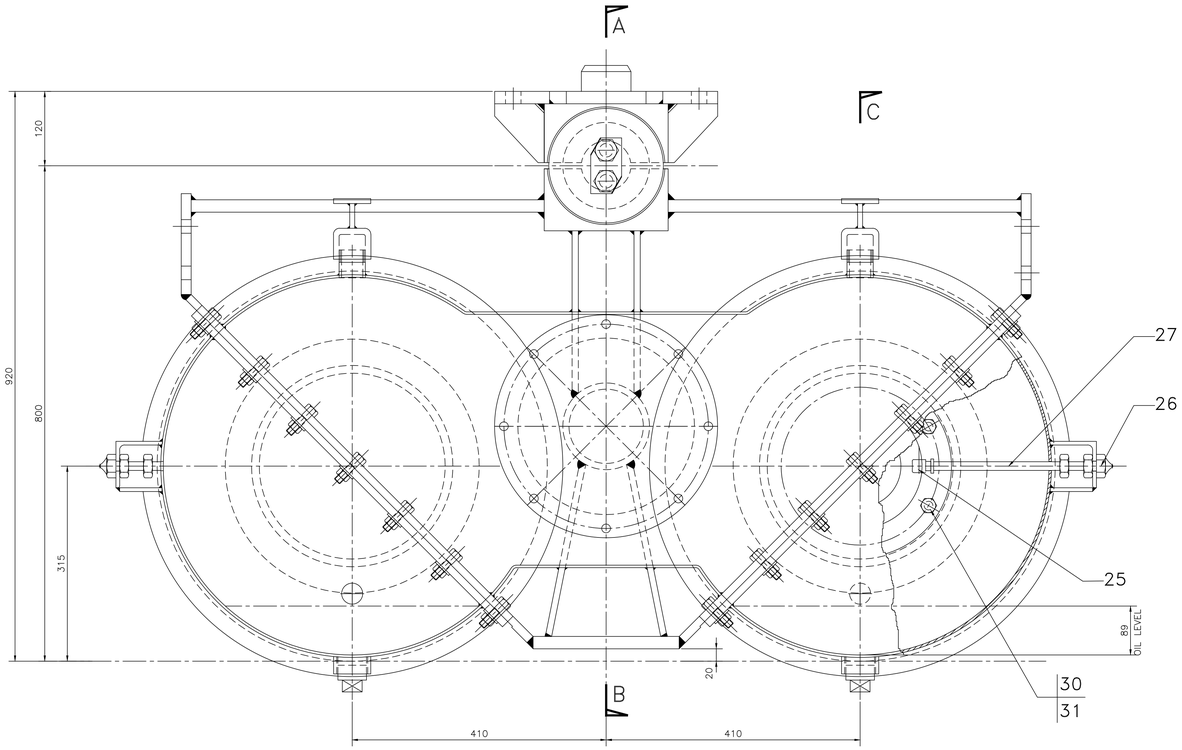

ELEVATION

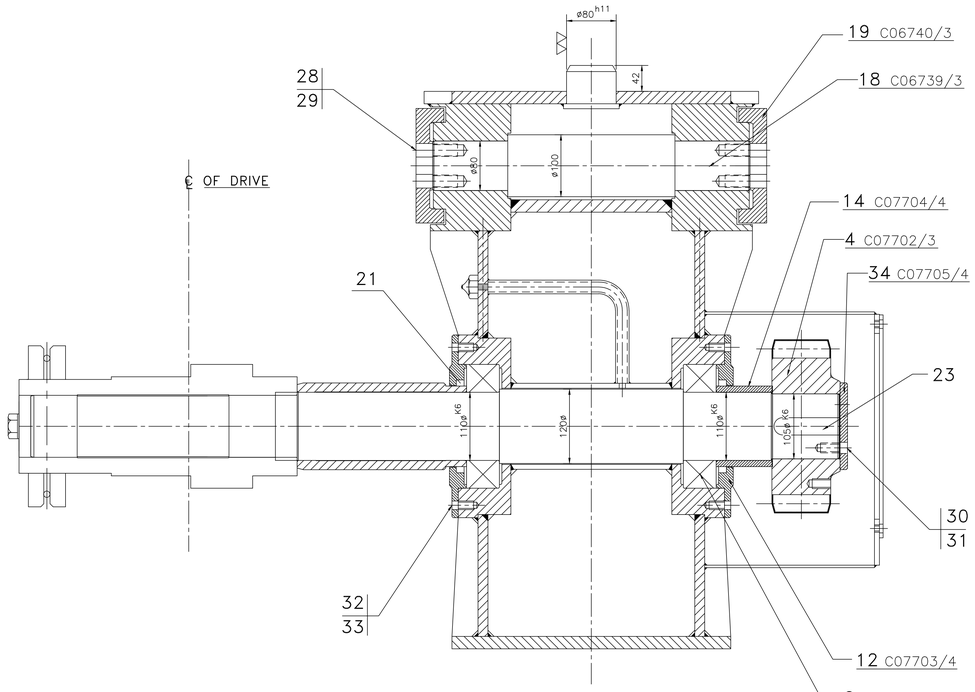

SECTION ON–AB

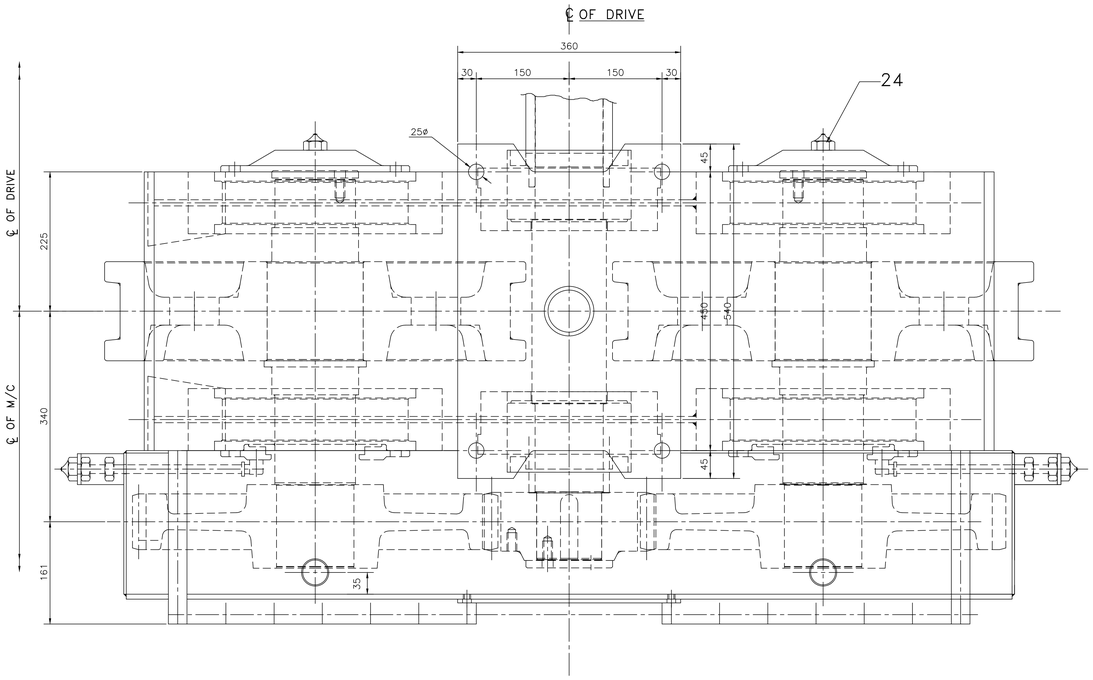

TOP PLAN

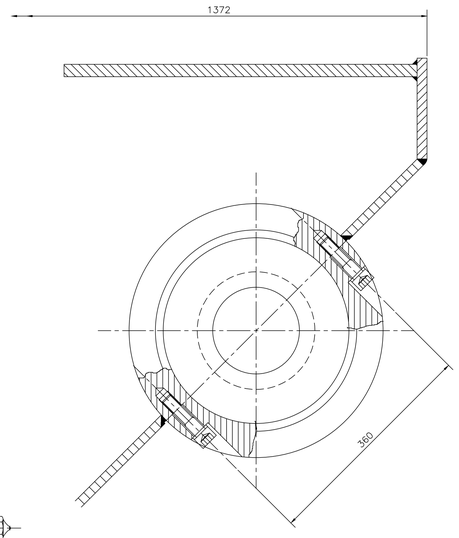

SECTION ON–EF

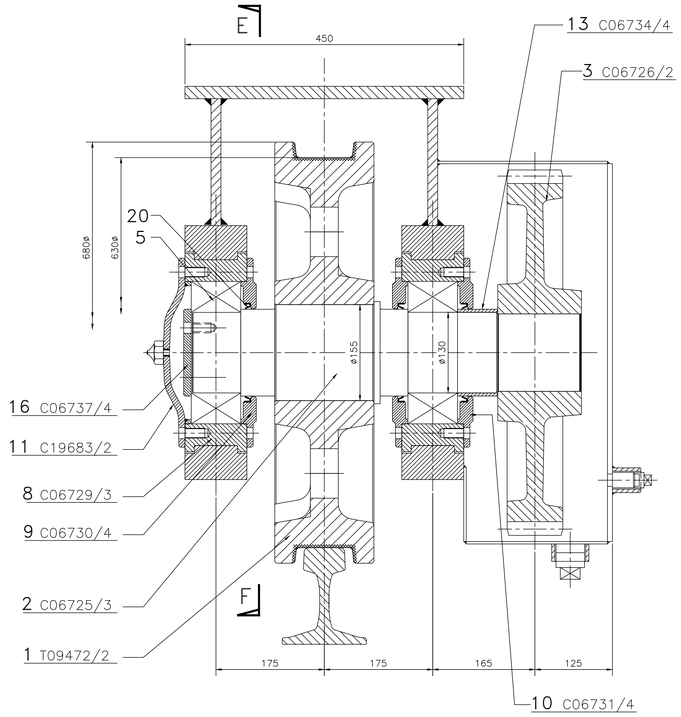

SECTION ON–CD

ITEM NO. 7, 15 & 17 OMMITED

ELE.	STRU	MECH	SEC	DATE	ZONE	ISSUE	AMENDMENTS	

DRAWN	R. K. Patel	17/4/12
CHECK	R.R.PANCHAL	17/4/12
APPROVED SEC.	R.P.JARIA	17/4/12
APPROVED MEC	R.P.JARIA	17/4/12
APPROVED STR.		
APPROVED ELE.		

SCALE : 1:40

DRIVE BOGIE 630ø WHEEL

MACHINE PARTS (CR–100)

THIS DRAWING IS THE PROPERTY OF ELECON ENGINEERING CO. LTD. VALLABH VIDYANAGAR GUJARAT. LOANED TO THE RECIPIENT WHO AGREES THAT IT SHALL NOT BE GIVEN OUT COPIED OR DUPLICATED FOR THE USE OF ANOTHER BUT USED ONLY BY THE RECIPIENT FOR THE PURPOSE OF MAINTAINING THE EQUIPMENT TO WHICH IT REFERS.

MAIN GR. NO. 01

SUB GR. NO. 072

ELECON

ORDER NO. CO/2223

M/C NO. HM/545

DRG. NO. T09487/0

ISSUE

DRG.NO. T09487/0 ISSUE

USER SIZE 986x734

T105816/0, C08121/0, T105376/0

ELECON EPC
ELECON EPC PROJECTS LIMITED

ASSLY. OF DRIVE BOGIE

Group No. : 01/072 Drg.No. : T09486/3

Sr.No.	Description	Qty.	Part No.
1	Drive Bogie Steel Structure	1	C10211/1
2	Drive Bogie Machine Part	1	T09487/0
2.1	630 Dia Bogie Wheel (CR 100 Rail)	2	T09472/2
2.2	Wheel Axle 165Dia x 626 Lg.	2	C06725/3
2.3	Spur Wheel 57 Teeth, 570 P.C.D. Module : 10	2	C06726/2
2.4	Spur Pinion 25 Teeth, 250 P.C.D. Module : 10	1	C07702/3
2.5	Sph. Roller Bearing	4	T09487/0
2.6	Sph. Roller Bearing	2	T09487/0
2.7	Omitted	-	-
2.8	Bearing Housing	4	C06729/3
2.9	Bearing Cover	4	C06730/4
2.10	Bearing Cover	2	C06731/4
2.11	Bearing Cover	2	C19683/2
2.12	Bearing Cover	2	C07703/4
2.13	Spacer 140/130 Dia. x 65 Lg.	2	C06734/4
2.14	Spacer 130/110 Dia. x 91 Lg.	1	C07704/4
2.15	Omitted	-	-
2.16	Locking Plate	2	C06737/4
2.17	Omitted	-	-
2.18	Pin 100 Dia. x 512 Lg.	1	C06739/3

ELECON EPC
ELECON EPC PROJECTS LIMITED

Group No. : 01/072 Drg.No. : T09486/3

Sr.No.	Description	Qty.	Part No.
2.19	End Disc 185 Dia. x 45 Thk.	2	C06740/3
2.20	Oil Seal	6	T09487/0
2.21	Oil Seal	2	T09487/0
2.22	Omitted	-	-
2.23	Key OER K 28 x 16 x 100 Lg.	1	IS:2048
2.24	Grease Nipple 1/4" BSP	3	T09487/0
2.25	Elbow Connector Suitable for M 3/8" Pipe with 1/4" BSP Thread	2	T09487/0
2.26	Adaptor 1/4" BSP x 10mm	2	T09487/0
2.27	Seamless M.S. Pipe 10 Dia.	2	T09487/0
2.28	Hex. Screw M20 x 55 Lg.	4	IS:1363 S4.6
2.29	Washer	2	C19559/4
2.30	Hex. Screw M16 x 40 Lg.	57	IS:1363 S4.6
2.31	Spring Washer B16	57	IS:3063
2.32	Hex. Screw M12 x 30 Lg.	12	IS:1363 S4.6
2.33	Spring Washer B12	12	IS:3063
2.34	Locking Plate	1	C07705/4
3	Transmission Shaft 120 Dia. x 1260 Lg.	1	T05817/2
4	Spacer 140 O/D x 109 I/D x 291.5 Lg.	1	C19621/4

NOTE : MACHINE CONTAINING TWO TIMES THE ABOVE LISTED QTY.

DRG NO.T09481/3 ISSUE

DO NOT SCALE

IF IN DOUBT ASK

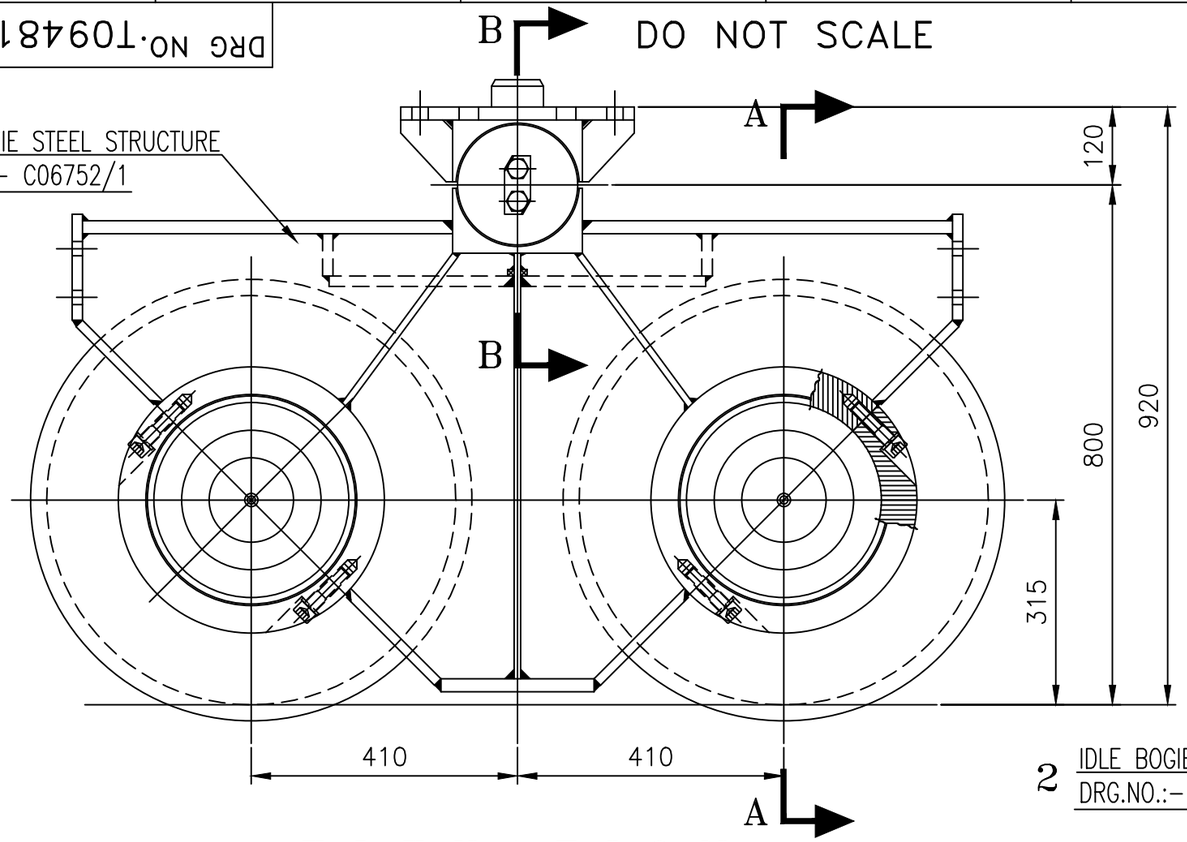

ELEVATION

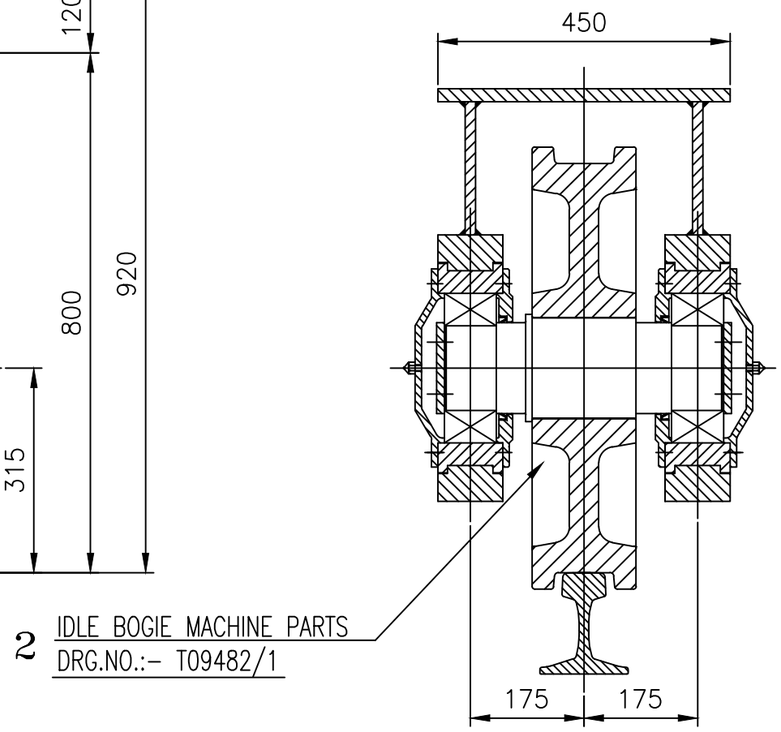

SECTION – A A

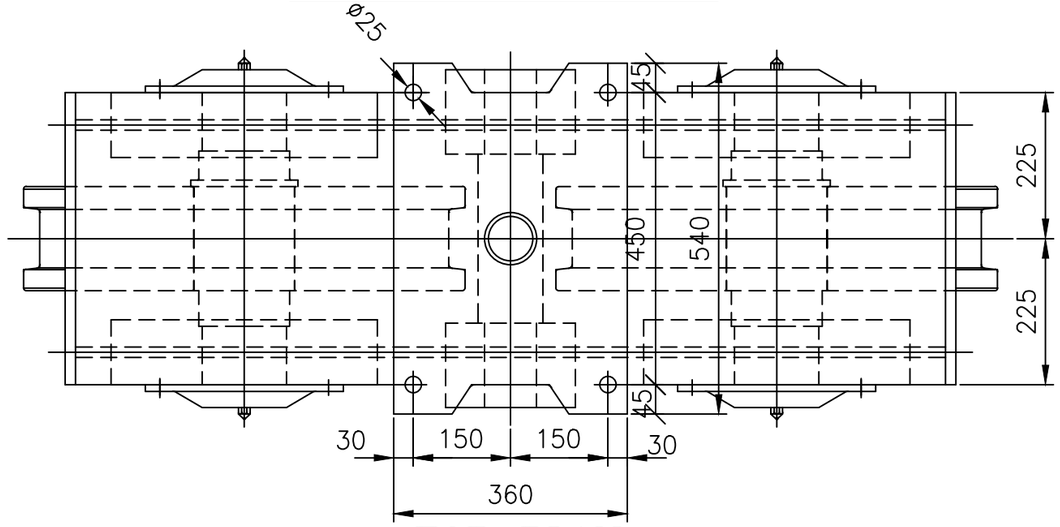

TOP PLAN

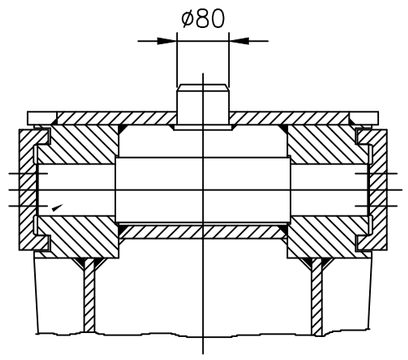

SECTION – B B

ISSUE	DATE	AMENDMENTS

THIS DRAWING IS THE PROPERTY OF ELECON ENGINEERING CO. LTD. LONAED TO THE RECIPIENT WHO AGREES THAT IT SHALL NOT BE GIVEN OUT. COPIED OR DUPLICATED FOR THE USE OF ANOTHER BUT USED ONLY BY THE RECIPIENT FOR THE PURPOSE OF MAINTAINING THE EQUIPMENT TO WHICH IT REFERS.

DRAWN	R. K. P.	11/04/12
CHECKED	R. R. P.	11/04/12
APPROVED SEC.		
APPROVED MECH	R. P. J.	11/04/12
APPROVED STRU.		
APPROVED ELEC.		

ASSLY OF IDLE BOGIE

ORDER NO.	M/C. NO.	SCALE
		1:10

ELECON

MAIN GR.NO.

SUB GR.NO.

DRG. NO. T09481/3

ISSUE

USER SIZE: 395 x 275

C21251/3 C26760/3

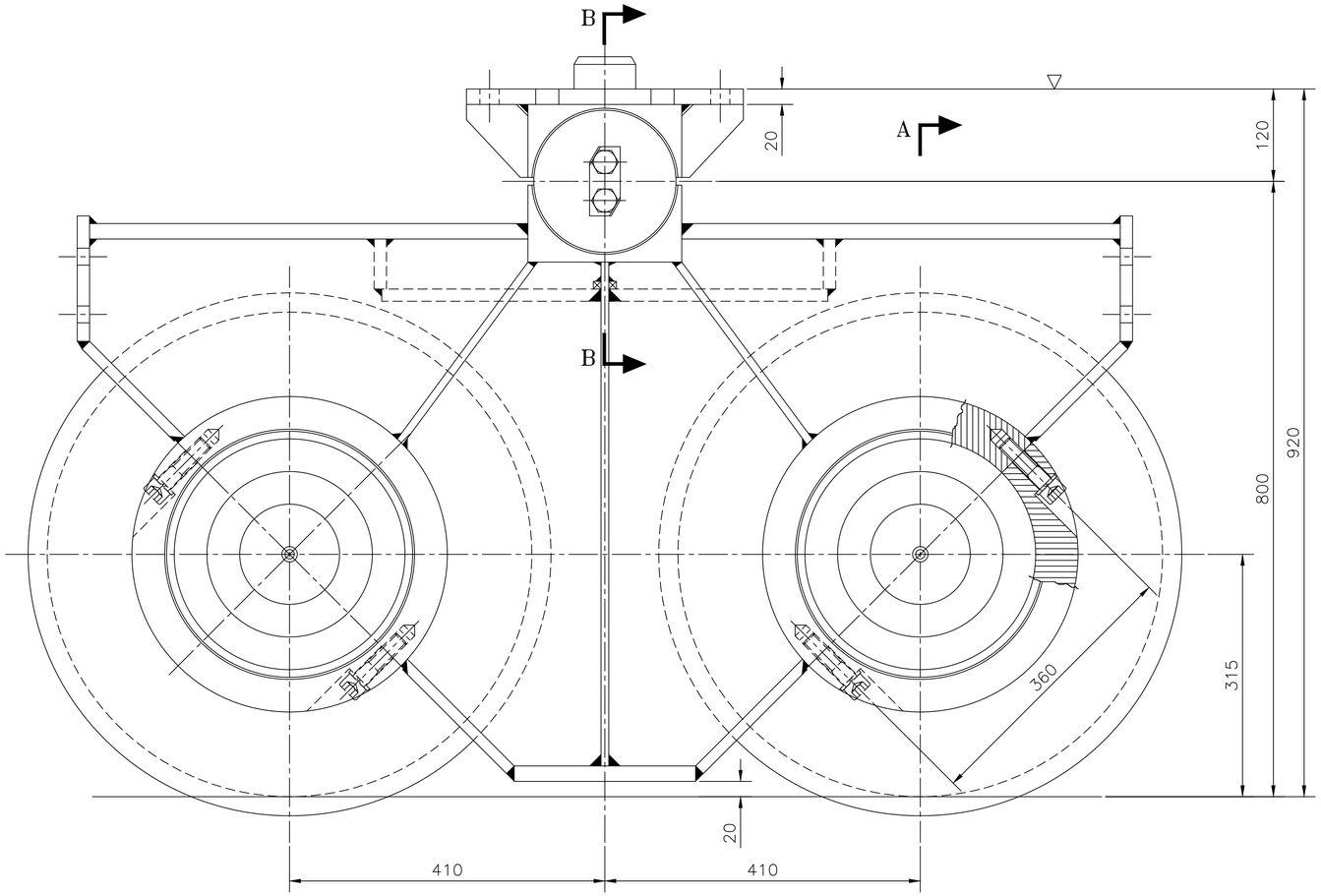

E L E V A T I O N

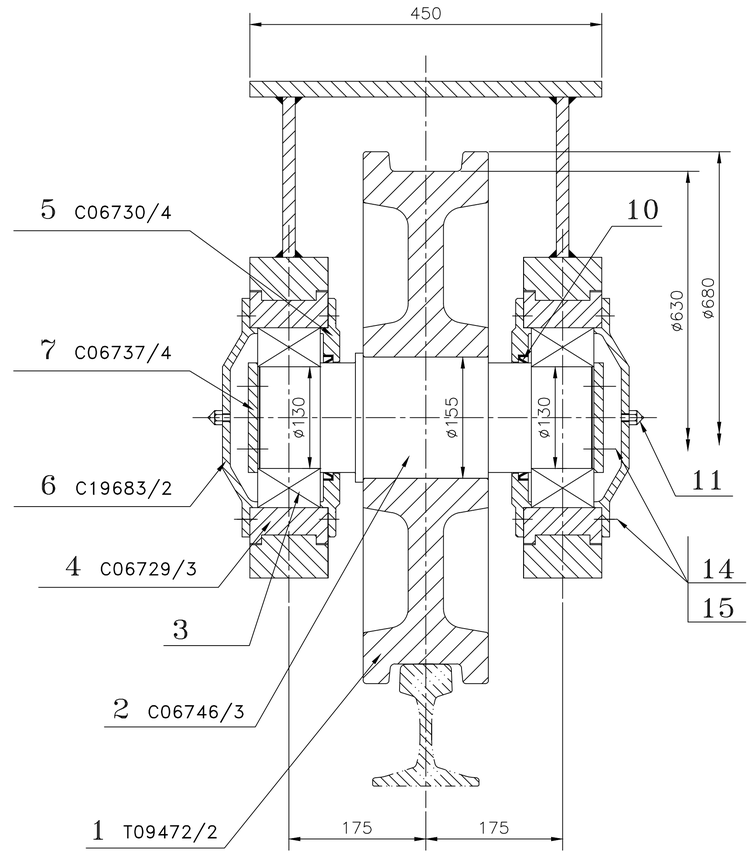

SECTION – A A

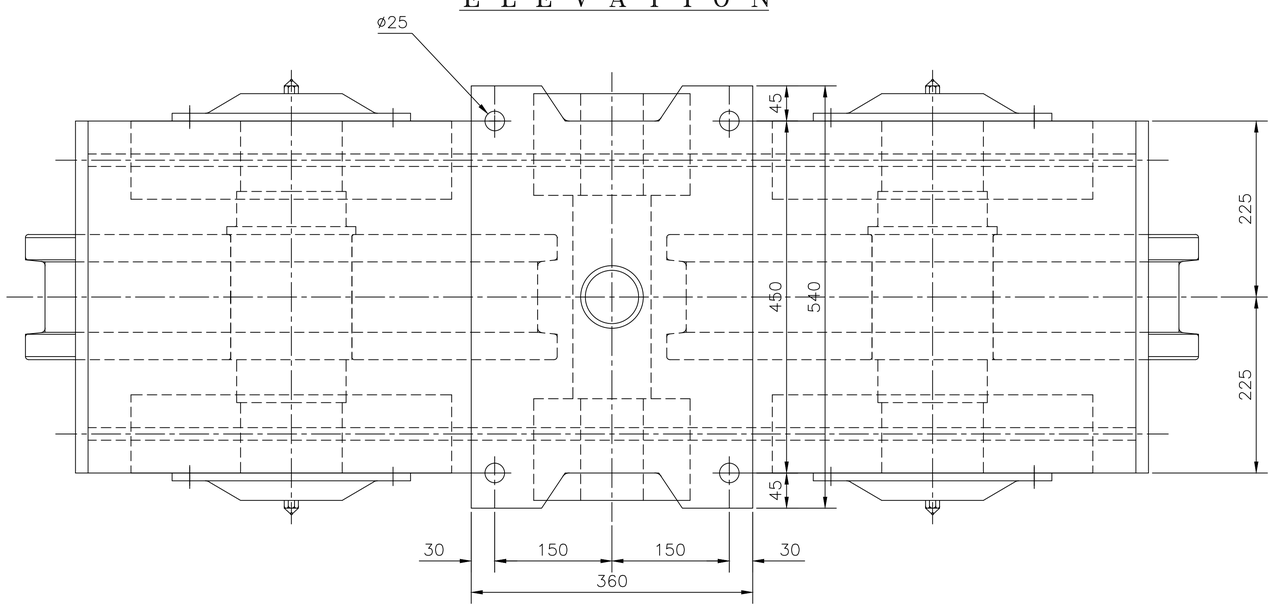

TOP PLAN

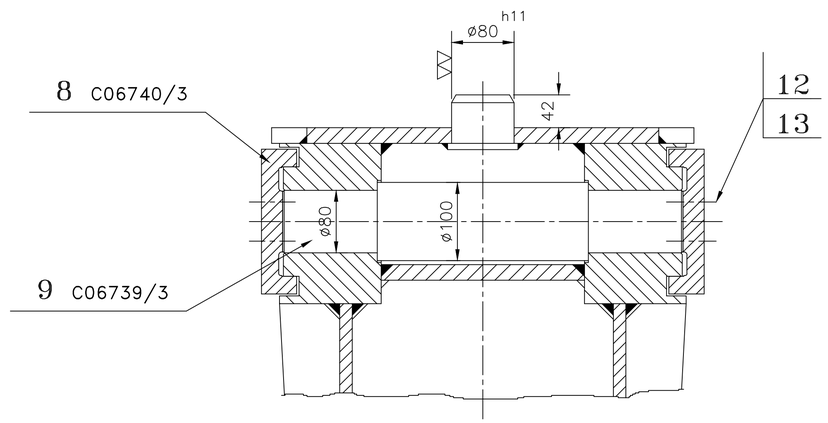

SECTION – B B

ELE	STRU	MECH	SEC	DATE	ZONE	ISSUE	AMENDMENTS

DRAWN	R. K. Patel	11/4/12	
CHECKED	R. R. Panchal	11/4/12	
APPROVED SEC	R. P. Joria	11/4/12	
APPROVED MECH			
APPROVED STRU			
APPROVED ELE			
SCALE	1:4		

IDLE BOGIE MACHINE PARTS

ø630 WHEEL

THIS DRAWING IS THE PROPERTY OF ELECON ENGINEERING CO. LTD. VALLABH VIDYANAGAR GUJARAT. LOANED TO THE RECIPIENT WHO AGREES THAT IT SHALL NOT BE GIVEN OUT COPIED OR DUPLICATED FOR THE USE OF ANOTHER BUT USE ONLY BY THE RECIPIENT FOR THE PURPOSE OF MAINTAINING THE EQUIPMENT TO WHICH IT REFERS.

MAIN GR. NO.

SUB GR. NO.

ELECON

ORDER NO | M/C NO

DRG NO. T09482/1 | ISSUE.

C06745/1 A C26761/1

(USER SIZE 580 x 820)

ELECON EPC
ELECON EPC PROJECTS LIMITED

ASSLY. OF IDLE BOGIE

Group No. : 01/073 Drg.No. : T09481/3

Sr.No.	Description	Qty.	Part No.
1	Idle Bogie Steel Structure	1	C06752/1
2	Idle Bogie Machine Part	1	T09482/1
2.1	630 Dia Bogie Wheel (CR 100 Rail)	2	T09472/2
2.2	Wheel Axle 165Dia x 426 Lg.	2	C06746/3
2.3	Sph. Roller Bearing	4	T09482/1
2.4	Bearing Housing	4	C06729/3
2.5	Bearing Cover	4	C06730/4
2.6	Bearing Cover	4	C19683/2
2.7	Locking Plate	4	C06737/4
2.8	End Disc 185 Dia. x 45 Thk.	2	C06740/3
2.9	Pin 100 Dia. x 512 Lg.	1	C06739/3
2.10	Oil Seal	4	T09482/1
2.11	Grease Nipple 1/4" BSP	4	T09482/1
2.12	Hex. Screw M20 x 55 Lg.	4	IS:1363 S4.6
2.13	Washer	2	C19559/4
2.14	Hex. Screw M16 x 40 Lg.	60	T09482/1
2.15	Spring Washer B16	60	T09482/1

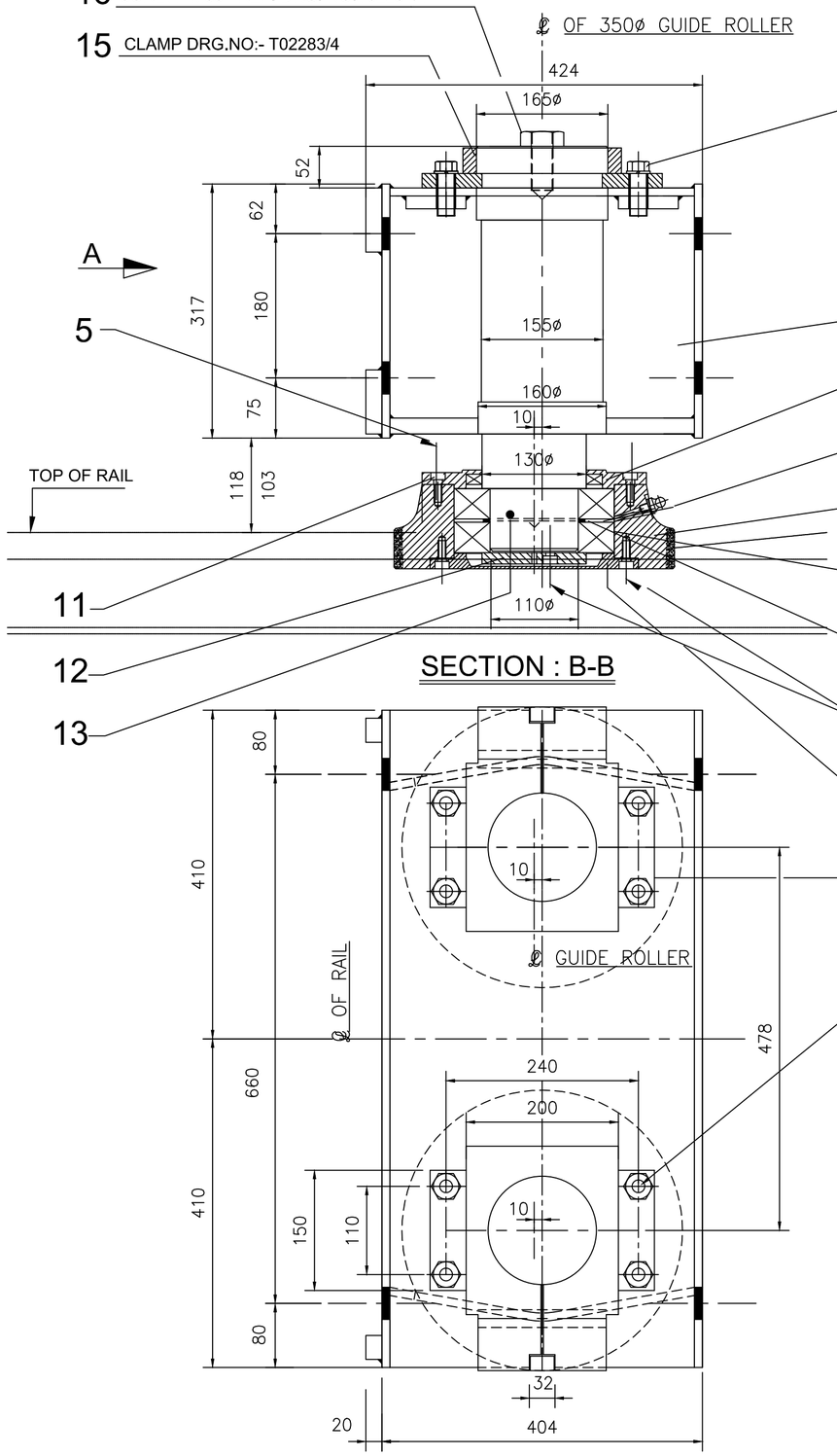

TOP PLAN

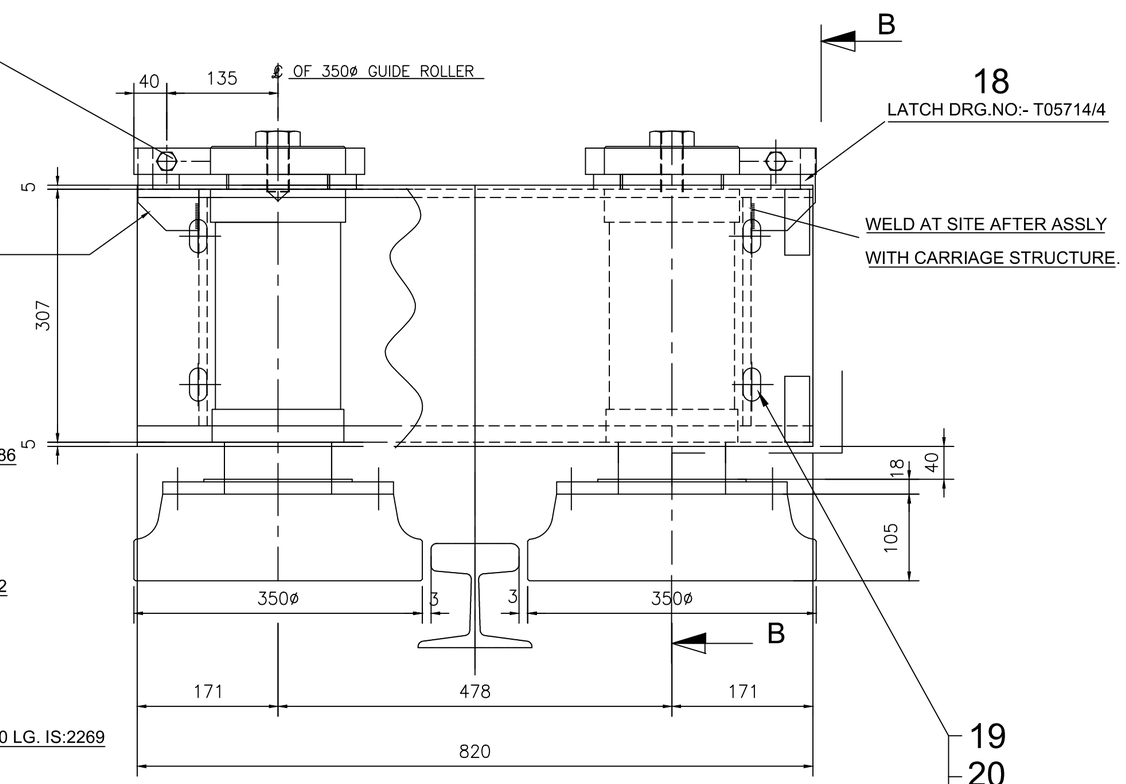

VIEW FROM ARROW : A

17 HEX BOLT M20 X 180 N IS:1363
10 SPRING WASHER B20 IS:3063
9 HEX.SCREW M 20 x 65 IS:1363
10 SPRING WASHER B 20 IS:3063
18 LATCH FOR LOCK PLATE DRG.NO.T05714/4
1 BRACKET FOR GUIDE ROLLER DRG.NO.T09493/2
14 OIL SEAL 130 x 170 x 12 IS:5129 TYPE:'A`
2 GREASE NIPPLE 1/8" BSP TYPE:12,BS:1486
3 GUIDE ROLLER DRG.NO.T05713/3
4 BARREL ROLLER BEARING NO.SKF-20222
6 SPACER DRG.NO.H00215/4
5 HEX.SOCKET HEAD CAP SCREW M10 x 20 LG. IS:2269
7 BOTTOM COVER DRG.NO.H00214/3
8 LOCKPLATE REF.DRG. NO. T02282/4
9 HEX.SCREW M20 x 65 LG. IS:1363
10 SPRING WASHER B20 IS:3063
11 TOP COVER DRG.NO. H01187/3
12 LOCK PLATE DRG.NO. H00216/4
13 AXLE DRG.NO. T05715/3
19 H.S.F.G. BOLT M20 x 65 LG. IS;3757,10.9
20 H.S.F.G. NUT M20 IS:6623,10
21 H.S.F.G. PLAIN WASHER A21 IS:6649

MECH	STRU	SECT.	DATE	SIGN	ISSUE	AMENDMENTS

DRAWN		R. K. Patel	18/04/12
CHECKED		R. R. Panchal	18/04/12
APPROVED	SEC.		
	MECH	R. P. Joria	18/04/12
	STRU.		
	ELEC.		
SCALE			

TITLE
ASSLY.OF GUIDE ROLLER

MAIN GR.NO. 01
SUB GR.NO. 083

ELECON

ORDER NO.
M/C.NO. NO.
DRG. NO. T09492/2
ISSUE

THIS DRAWING IS THE PROPERTY OF ELECON ENGINEERING CO.LTD. VALLABH VIDYANAGAR GUJARAT.LOANED TO THE RECIPIENT WHO AGREES THAT IT SHALL NOT BE GIVEN OUT COPIED OR DUPLICATED FOR THE USE OF ANOTHER BUT USED ONLY BY THE RECIPIENT FOR THE PURPOSE OF MAINTAINING THE EQUIPMENT TO WHICH IT REFERS.

T05711/2
T02278/2

ELECON EPC
ELECON EPC PROJECTS LIMITED

GUIDE ROLLER ASSLY.

Group No. : 01/083 Drg.No. : T09492/2

Sr.No.	Description	Qty.	Part No.
1	Bracket For Guide Roller	1	T09493/2
2	Grease Nipple 1/8" BSP	2	T09492/2
3	Roller 350 Dia. x 105 Thk.	2	T05713/3
4	Barrel Roller Bearing	4	T09492/2
5	Hex. Socket Head Screw M10 x 20 Lg.	30	IS:2269
6	Spacer 127 O/D x 110.5 I/D x 4 Thk.	2	H00215/4
7	Bottom Cover	2	H00214/3
8	Lock Plate	2	T02282/4
9	Hex. Screw M20 x 65 Lg.	8	IS:1363 S4.6
10	Spring Washer B20	8	IS:3063
11	Top Cover	2	H01187/3
12	Lock Plate	2	H00216/4
13	Axle	2	T05715/3
14	Oil Seal	2	IS:5129
15	Clamp	2	T02283/4
16	Set Screw M30 x 50 Lg.	2	T02281/4
17	Hex. Bolt & Nut M20 x 180 Lg.	2	IS:1363 S4.6
18	Latch	2	T05714/4
19	HSFG Bolt M20 x 65 Lg.	4	IS:3757 S10.9
20	HSFG Hex. Nut M20	4	IS:6623 S10.0
21	HSFG Plain Washer A22	8	IS:6649

NOTE : MACHINE CONTAINING FOUR TIMES THE ABOVE LISTED QTY.

DO NOT SCALE

IF IN DOUBT ASK

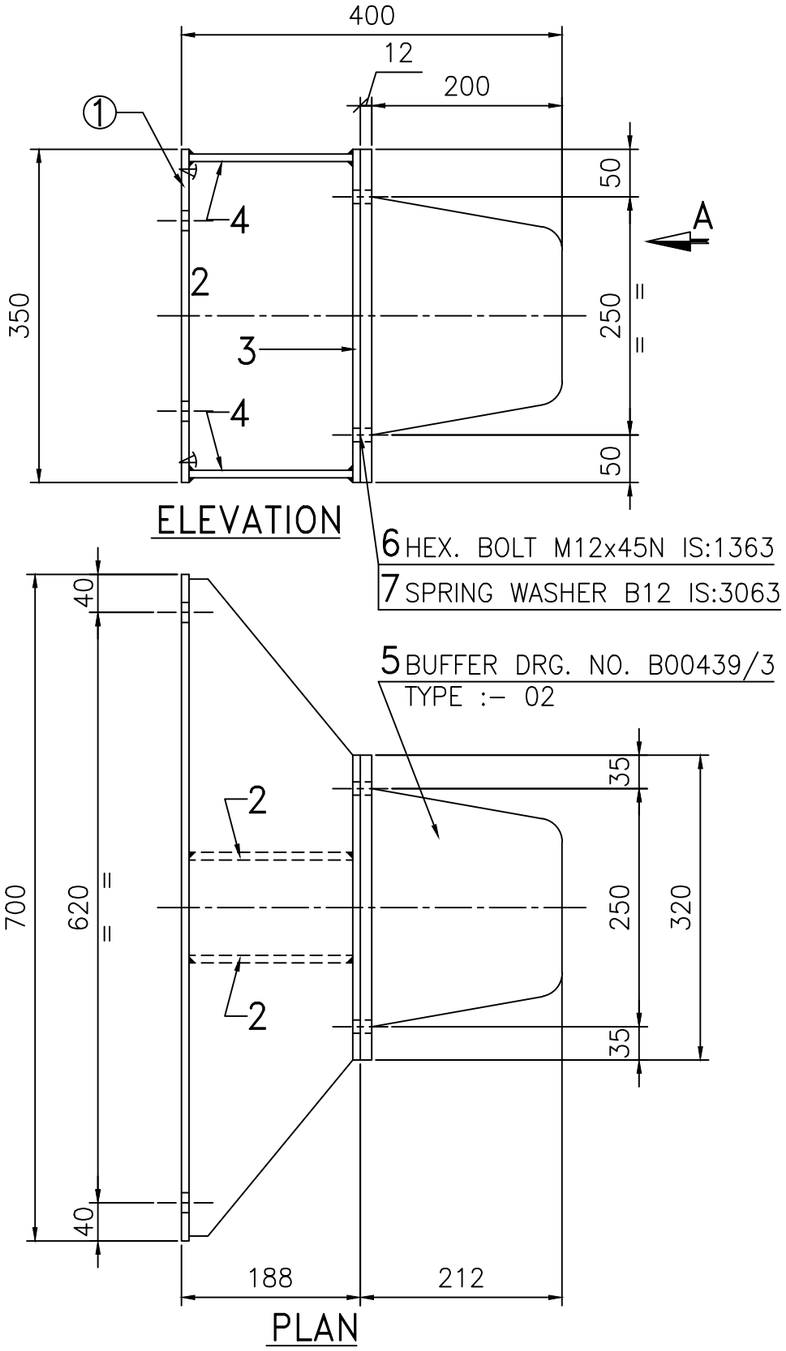

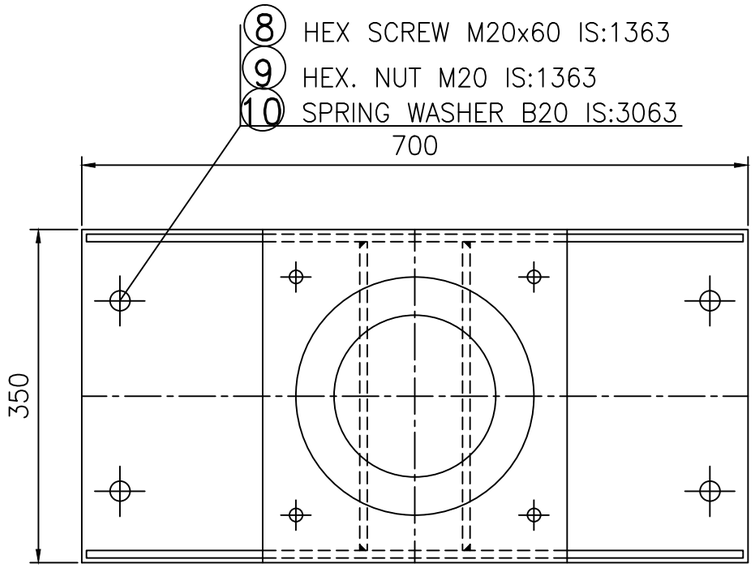

ISSUE	DATE	AMENDMENTS

THIS DRAWING IS THE PROPERTY OF ELECON ENGINEERING CO. LTD. LONAED TO THE RECIPIENT WHO AGREES THAT IT SHALL NOT BE GIVEN OUT. COPIED OR DUPLICATED FOR THE USE OF ANOTHER BUT USED ONLY BY THE RECIPIENT FOR THE PURPOSE OF MAINTAINING THE EQUIPMENT TO WHICH IT REFERS.

DRAWN		R. K. Patel
CHECKED		
APPROVED	SEC.	
	MECH	
	STRU.	
	ELEC.	

BRACKET WITH BUFFER

ORDER NO.	M/C. NO.	SCALE

ELECON

MAIN GR.NO. 01

SUB GR.NO. 087

DRG. NO. T09378/3M

ISSUE

USER SIZE: 385 x 265

ELECON EPC PROJECTS LIMITED

BRACKET WITH BUFFER

Group No. : 01/087 Drg.No. : T09378/3

Sr.No.	Description	Qty.	Part No.
1 to 4	Bracket For Buffer	-	T09378/3
5	Rubber Buffer Type-2	1	B00439/3
6	Hex. Bolt & Nut M12 x 45 Lg.	4	IS:1363 S4.6
7	Spring Washer B12	4	IS:3063
8	Hex. Screw M20 x 60 Lg.	4	IS:1363 S4.6
9	Hex. Nut M20	4	IS:1363
10	Spring Washer B20	4	IS:3063

NOTE : MACHINE CONTAINING FOUR TIMES THE ABOVE LISTED QTY.

DO NOT SCALE

IF IN DOUBT ASK

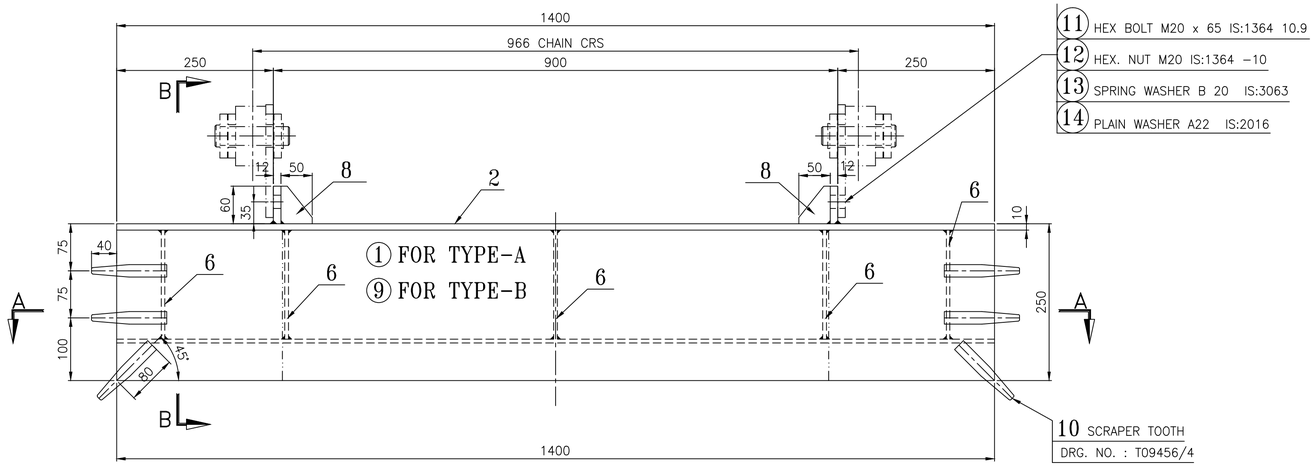

ELEVATION

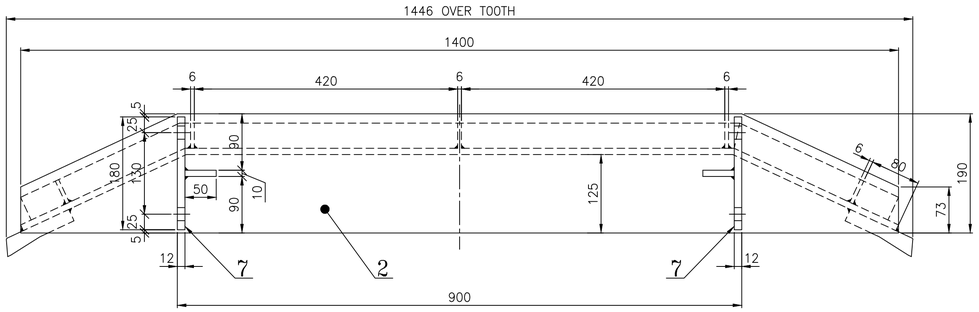

TOP VIEW

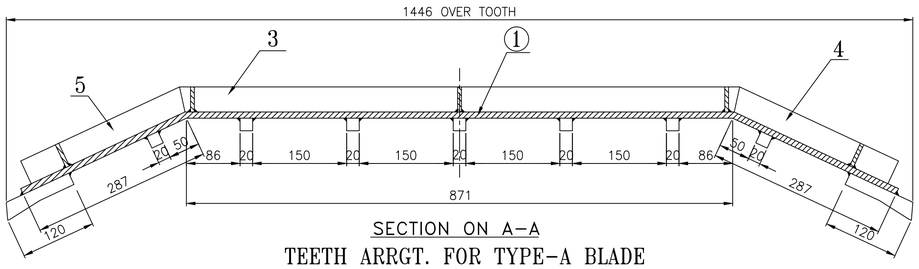

SECTION ON A-A

TEETH ARRGT. FOR TYPE-A BLADE

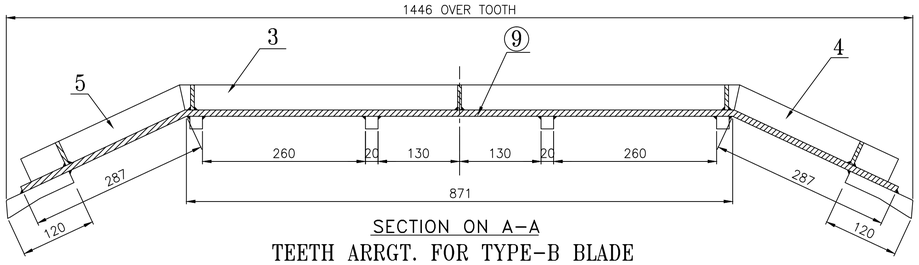

SECTION ON A-A

TEETH ARRGT. FOR TYPE-B BLADE

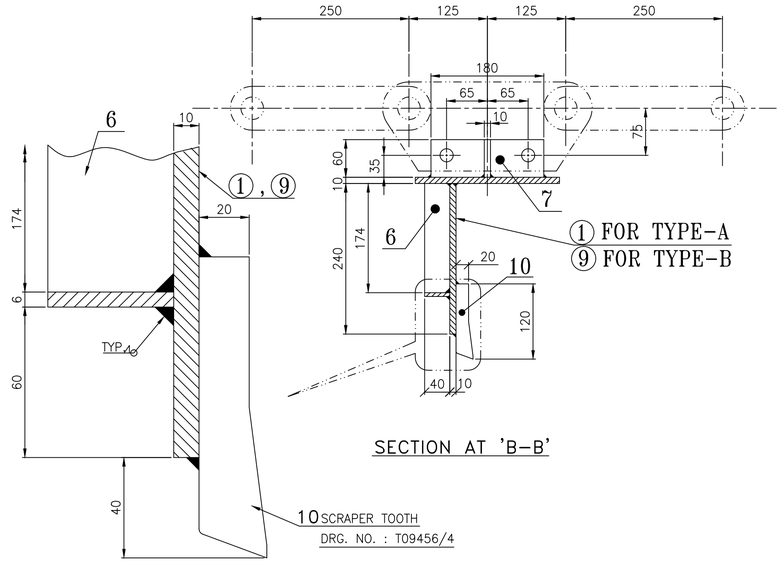

SECTION AT 'B-B'

TYPE OF BLADE	A	B
QTY. OF BLADE	44	44

QTY. OF SCRAPER BLADE = 88 NOS. PER MACHINE

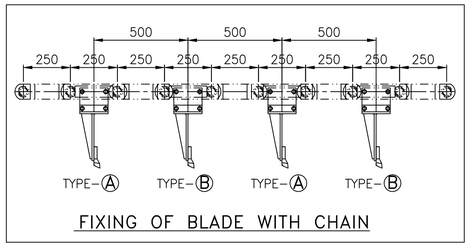

FIXING OF BLADE WITH CHAIN

ELE.	STRU	MECH	SEC	NAME	DATE	ISSUE	AMENDMENTS

DRAWN	R. K. Patel	03/12/12
CHECK		
APPROVED SEC.		
APPROVED MEC		
APPROVED STR.		
APPROVED ELE.		
SCALE :		

ASSY.OF BLADE 1400 X 250
(FOR MAIN BOOM)

THIS DRAWING IS THE PROPERTY OF ELECON ENGINEERING CO. LTD. VALLABH VIDYANAGAR GUJARAT. LOANED TO THE RECIPIENT WHO AGREES THAT IT SHALL NOT BE GIVEN OUT COPIED OR DUPLICATED FOR THE USE OF ANOTHER BUT USED ONLY BY THE RECIPIENT FOR THE PURPOSE OF MAINTAINING THE EQUIPMENT TO WHICH IT REFERS.

MAIN GR. NO. 18

SUB GR. NO. 004

ELECON

ORDER NO.

M/C NO.

DRG. NO. T10354/1M

ISSUE

DRG NO.

ISSUE

USER SIZE 820x570

ELECON EPC
ELECON EPC PROJECTS LIMITED

ASSEMBLY OF BLADE (MAIN BOOM)- 1400x250

Group No. : 18/004 Drg.No. : T10354/1

Sr.No.	Description	Qty.	Part No.
1	Scraper Blade Type-A	44	T10354/1
1 to 8	Structural Plate	-	T10354/1
10	Teeth	13	T09456/4
9	Scraper Blade Type-B	44	T10354/1
2 to 9	Structural Plate	-	T10354/1
10	Teeth	10	T09456/4
11	Hex. Bolt M20 x 65 Lg.	352	IS:1364 S10.9
12	Hex. Nut M20	352	IS:1364 S10.0
13	Spring Washer B20	352	IS:3063
14	Plain Washer A22	352	IS:2016

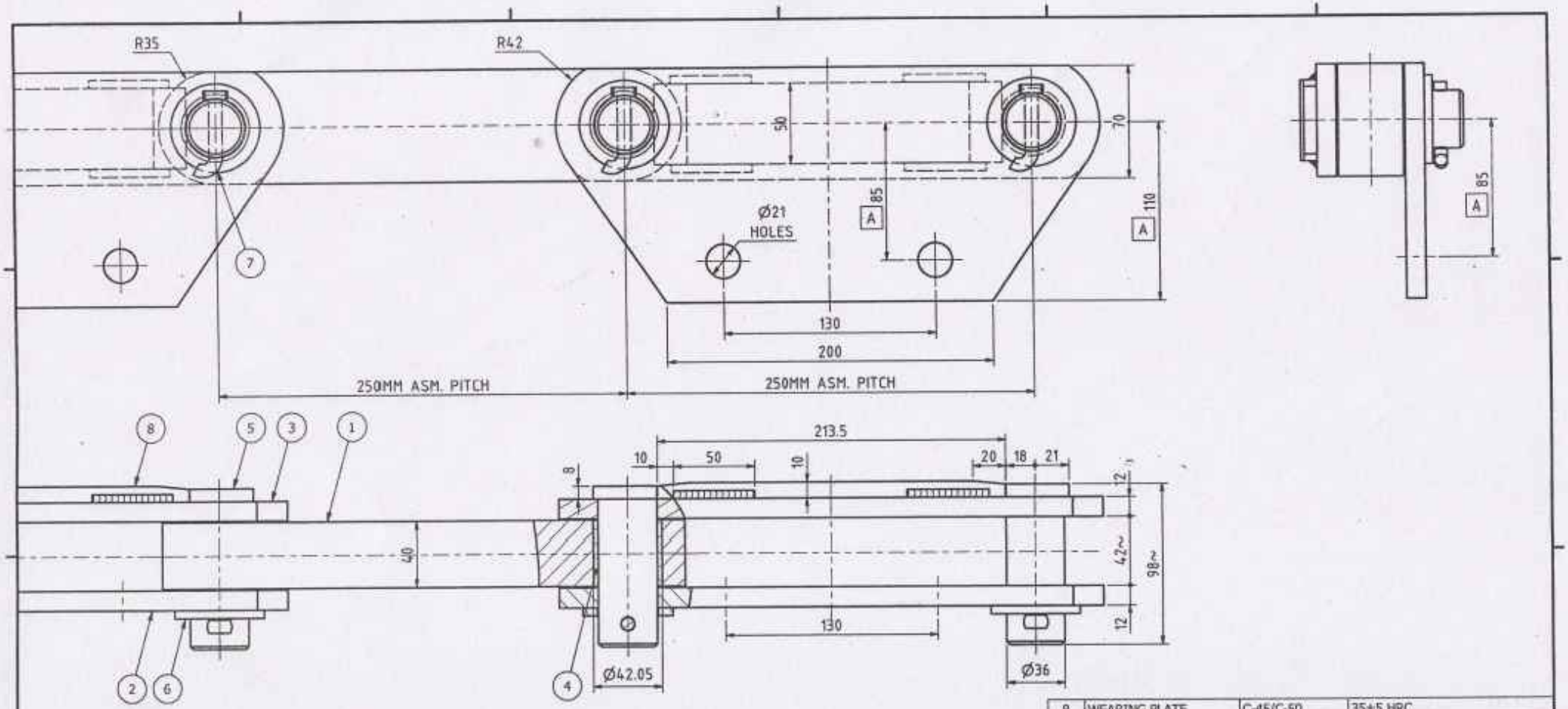

ITEM	DESCRIPTION	MATERIAL	TREATMENT
8	WEARING PLATE	C-45/C-50	35±5 HRC
7	COTTER PIN	M.S.	-----
6	WASHER	M.S.	-----
5	HEAD BOLT / PIN	16MnCr5/EN-19	CASE / INDUCTION HARD. TO 55±5 HRC, DEPTH 1.5 MM MAX.
4	BUSH / LINK BUSH	EN-45	42±5 HRC
3	OUTER LINK	C-45/C-50	35±5 HRC
2	ATT. OUTER LINK	C-45/C-50	35±5 HRC
1	INNER / CENTRAL LINK	C-45/C50 FORGED STEEL	35±5 HRC

NOTES :

1. TOLERANCE ON ALL THE DIMENSIONS WILL BE GIVEN TO SUIT THE PROPER CHAIN MANUFACTURING.
2. TOLERANCE ON PINS, BUSHES & ROLLERS SHOULD BE SUCH THAT THE MAX. CLEARANCE NOT TO EXCEED 0.4 M.M.
3. AVERAGE BREAKING LOAD OF THE CHAIN WILL BE- **50,000 KGS. (500 KN).**
4. ALL THE CHAIN WILL BE PRE LOADED AT 1/3rd OF THE BREAKING LOAD.
5. THE PERMISSIBLE LENGTH TOLERANCE IN ASSEMBLED CHAIN LENGTH 10'.0" WILL BE +0.25/-0.00 % AS PER ISO 1977/1.

(RC-12-2591)
ALL DIMENSIONS ARE IN M.M.

REF.: EECL, DRG# SCR. CHAIN/3.8.4

DRAWN	WORKS MANAGER	H.T. DEPARTMENT	Q.C. DEPARTMENT	Date
KIRAN PATEL				28/04/2012

ROLCON ENGINEERING CO. LTD.
POST BOX NO. 26,
ANAND SOJITRA ROAD
VALLABH VIDYANGAR - 388 120
GUJARAT, INDIA

250 MM PITCH BLOCK LINK TYPE SCRAPER CHAIN

DRG.# **RC-12-4418** | Revision **A** | Sheet 1 / 1

REV	DESCRIPTION	APPROVED	DATE
A	PARTY'S EMAIL ON DT. 19.09.2013 WITH DRG. COMMENT, MARK A DIMENSIONS CHANGED.		20/09/2013

ELECON EPC
ELECON EPC PROJECTS LIMITED

SCRAPER BLOCK LINK CHAIN (MAIN BOOM)

Group No. : 18/005 Drg.No. : RC-12-4418

Sr.No.	Description	Qty.	Part No.
1	Block Link Chain 250 mm Pitch R.H. Execution = 44.000 Mtrs. (176 Nos. of Link) L.H. Execution = 44.000 Mtrs. (176 Nos. of Link) Breaking Load of Chain = 5000 Kgs. (500 KN) Blade Attachment Pitch = 500 mm Ref. Drg. No. RC-12-4418 Make : Rolcon	1	RC-12-4418

DO NOT SCALE

IF IN DOUBT ASK

DRG.NO. T10504/1 ISSUE

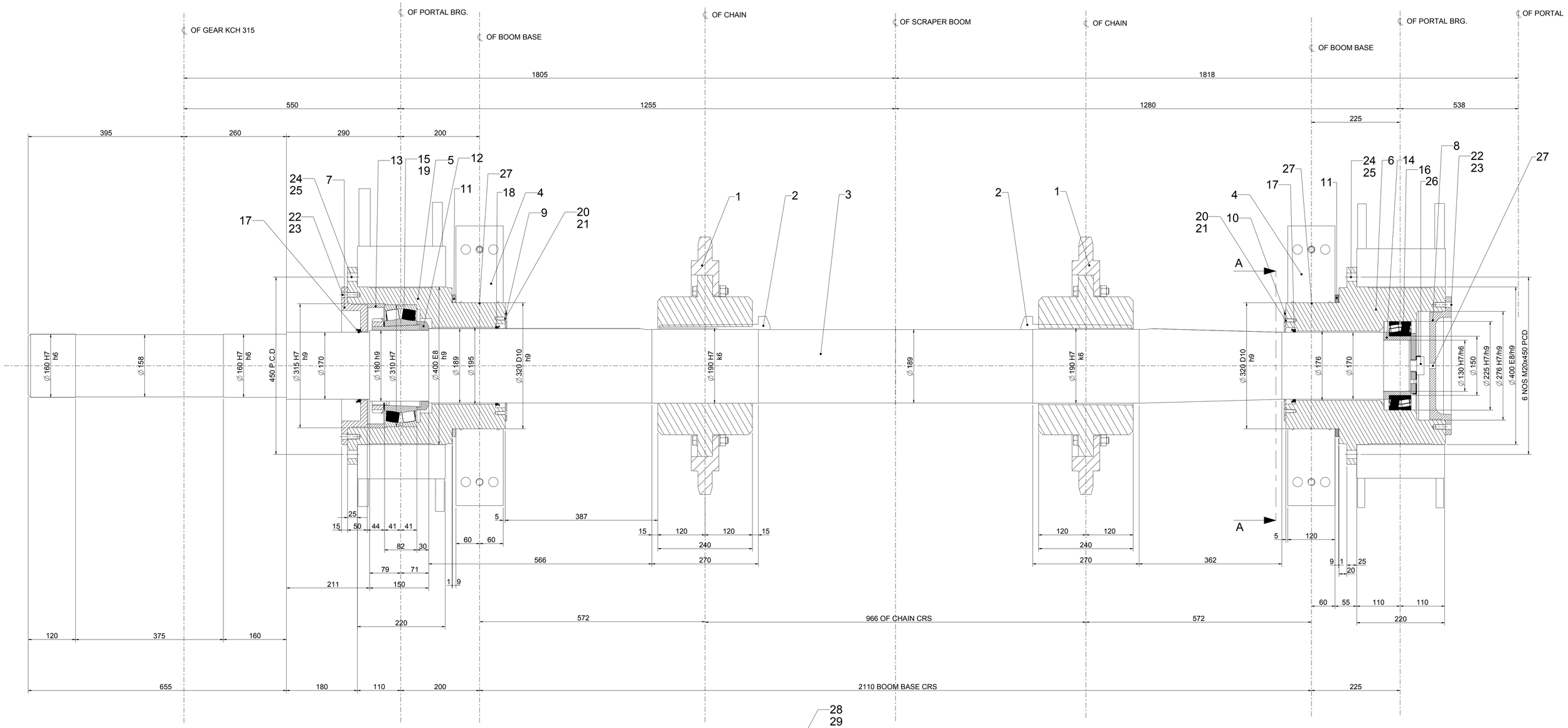

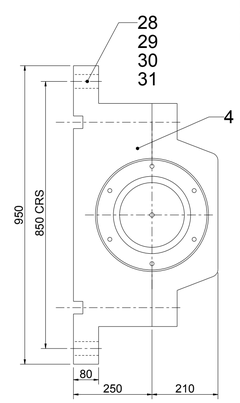

VIEW A-A

NO	DRG. NO	DESCRIPTION	NO	DWG. NO	DESCRIPTION
16	---	SRB 23030 CC/W33			
15	---	SRB 23040 K	31	---	PLAIN WASHER A45 IS:2016
14	C08664/4	BUSH	30	---	HEX. LOCK NUT M42 IS:1364 S 8.8
13	C08663/4	DISTANCE RING	29	---	HEX. NUT M42 IS:1364 S 8.8
12	C08662/4	DISTANCE RING	28	---	HEX. FITTED BOLT M42 x 190 LG. IS:3640 S 8.8
11	C08661/4	SPACER	27	---	GREASE NIPPLE 1/8" BSP
10	C08660/4	END COVER	26	C08740/4	SHAFT END PROTECTION
9	C08739/4	END COVER	25	---	SPRING WASHER B20
8	C08659/3	BEARING COVER	24	---	HEX. HD. SCREW M20 x 70 LG.
7	C08658/3	BEARING COVER	23	---	SPRING WASHER B12
6	C08657/2	BEARING HOUSING	22	---	HEX. HD. SCREW M12 x 40 LG.
5	C08656/2	BEARING HOUSING	21	---	SPRING WASHER B8
4	T00519/3	SUPPORT FOR BEARING HOUSING	20	---	HEX. HD. SCREW M8 x 20 LG.
3	C10525/2	DRIVE SHAFT	19	---	BEARING ADAPTOR SLEEVE H 3040
2	---	GIB HEAD KEY 45x25x280	18	---	RUBBER SEAL RING "V" TYPE S190
1	E07895/1	ASSLY OF SPROCKET	17	---	RUBBER SEAL RING "V" TYPE S170

ELE	STRU	MECH	SEC	DATE	NAME	ISSUE	AMENDMENTS

DRAWN	MEHUL DAVE	6/02/2013
CHECKED	R. K. PATEL	6/02/2013
APPROVED SEC.	R. R. PANCHAL	
APPROVED MECH.	R. P. JARIA	
APPROVED STRU.		
APPROVED ELE.		
SCALE :	A1	

ARRGT. OF DRIVE SHAFT FOR MAIN SCRAPER BOOM

MAIN GR. NO 18

SUB GR. NO. 006

ELECON

ORDER NO. CO/2281

MACHINE NO. HM/573-574

DRAWING NO. T10504/1

ISSUE

THIS DRAWING IS THE PROPERTY OF ELECON ENGINEERING CO. LTD. VALLABH VIDYANAGAR GUJARAT. LOANED TO THE RECIPIENT WHO AGREES THAT IT SHALL NOT BE GIVEN OUT COPIED OR DUPLICATED FOR THE USE OF ANOTHER BUT USE ONLY BY THE RECIPIENT FOR THE PURPOSE OF MAINTAINING THE EQUIPMENT TO WHICH IT REFERS.

T08784/1

USER SIZE 820x570

ELECON EPC
ELECON EPC PROJECTS LIMITED

SCRAPER DRIVE SHAFT ASSEMBLY (MAIN BOOM)

Group No. : 18/006 Drg.No. : T10504/1

Sr.No.	Description	Qty.	Part No.
1	Drive Sprocket Assembly	2	E07895/1
1.1	Sprocket Rim	1	E07891/1
1.2	Hub	1	E07896/2
1.3	Spring Dowel Sleeve 28Dia x 55mm	8	IS:5988
1.4	Hex. Screw M16 x 110 Lg.	8	IS:1364 S8.8
1.5	Plain Washer M16	16	IS:2016
1.6	Hex. Nut M16	8	IS:1364 S8.8
1.7	Hex. Lock Nut M16	8	IS:1364 S8.8
2	Gib Head Key 45 x 25 x 280 Lg.	2	IS:2293
3	Drive Shaft	1	C10525/2
4	Bearing Housing Support	2	T00519/3
4.1	Profile Plate	1	T00519/3
4.2	Profile Plate	1	T00519/3
4.3	Rec. Head Bolt with Nut	4	T00520/4
4.3.1	Rec. Head Bolt	1	T00520/4
4.3.2	Hex. Nut M22	1	IS:1364 S8.8
4.3.3	Hex. Lock Nut M22	1	IS:1364 S8.8
4.4	Spring Washer B22	4	IS:3063
4.5	Spring Dowel 12 Dia. x 60mm	2	IS:5988
5	Bearing Housing	1	C08656/2
6	Bearing Housing	1	C08657/2
7	Bearing Cover	1	C08658/3
8	Bearing Cover	1	C08659/3

ELECON EPC
ELECON EPC PROJECTS LIMITED

Group No. : 18/006 Drg.No. : T10504/1

Sr.No.	Description	Qty.	Part No.
9	End Cover	1	C08739/4
10	End Cover	1	C08660/4
11	Spacer	2	C08661/4
12	Distance Ring	1	C08662/4
13	Distance Ring	1	C08663/4
14	Bush	1	C08664/4
15	Sph. Roller Bearing	1	T10504/1
16	Sph. Roller Bearing	1	T10504/1
17	Rubber Seal Ring "V" type	2	T10504/1
18	Rubber Seal Ring "V" type	1	T10504/1
19	Bearing Adaptor Sleeve	1	T10504/1
20	Hex. Screw M8 x 20 Lg.	8	IS:1363 S4.6
21	Spring Washer B8	8	IS:3063
22	Hex. Screw M12 x 40 Lg.	12	IS:1364 S8.8
23	Spring Washer B12	12	IS:3063
24	Hex. Screw M20 x 70 Lg.	12	IS:1364 S 8.8
25	Spring Washer B20	12	IS:3063
26	Shaft End Protection	1	C08740/4
26.1	Cover	1	C08741/1
26.2	Cover Lock	1	C08742/4
26.3	Hex. Screw M30 x 70 Lg.	1	IS:1363 S4.6
26.4	Cylindrical Pin M6 x 35	1	IS:2393 10
27	Grease Nipple 1/8" BSP	3	T10504/1

ELECON EPC PROJECTS LIMITED

Group No. : 18/006 Drg.No. : T10504/1

Sr.No.	Description	Qty.	Part No.
28	Fitted Hex. Bolt & Nut M42 x 190Lg.	4	IS:3640 S8.8
29	Hex. Nut M42	4	IS:1364 S8.8
30	Hex. Lock Nut M42	4	IS:1364 S8.8
31	Punched Washer A45	4	IS:2016

DO NOT SCALE

IF IN DOUBT ASK

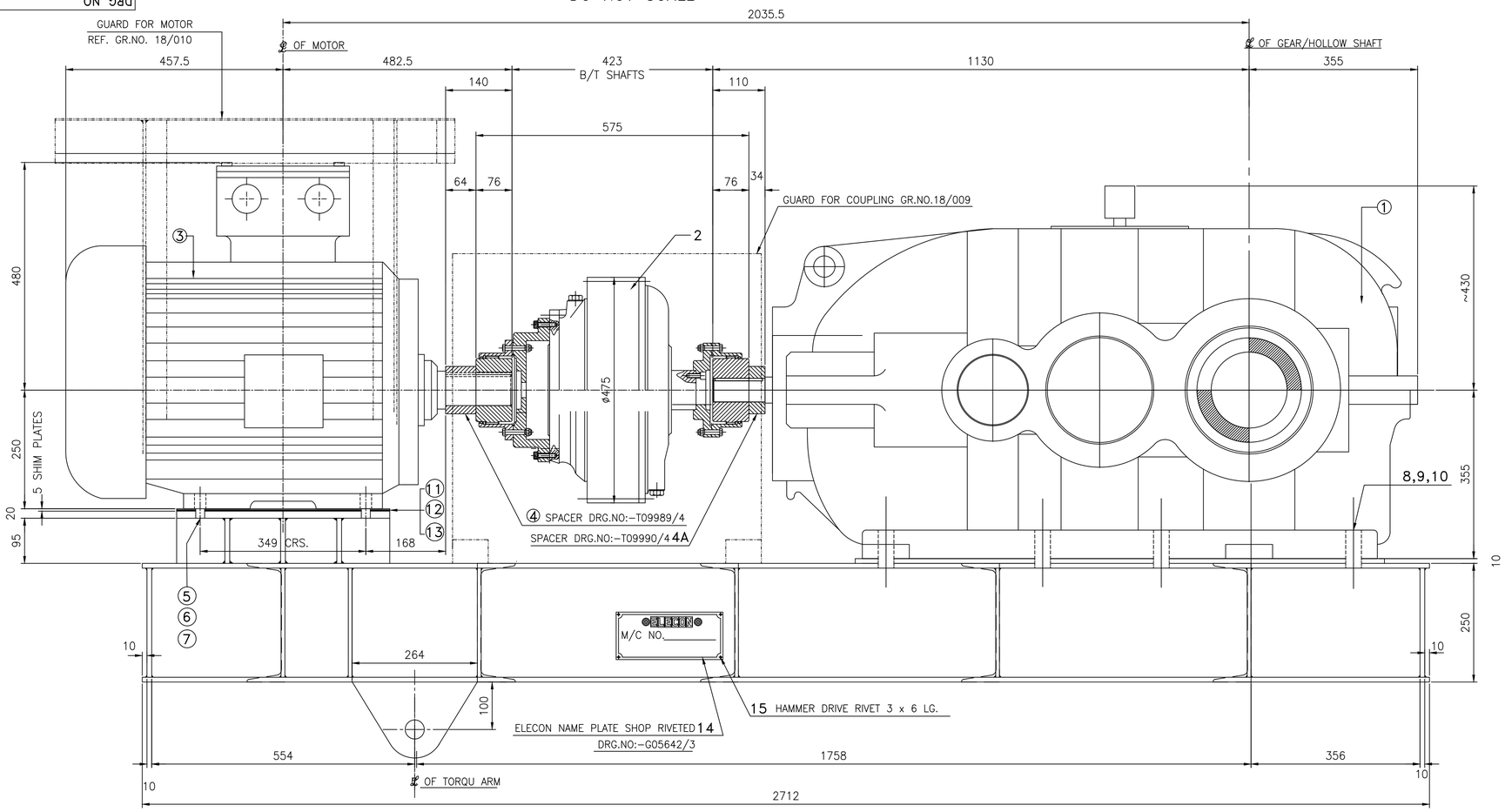

ELEVATION

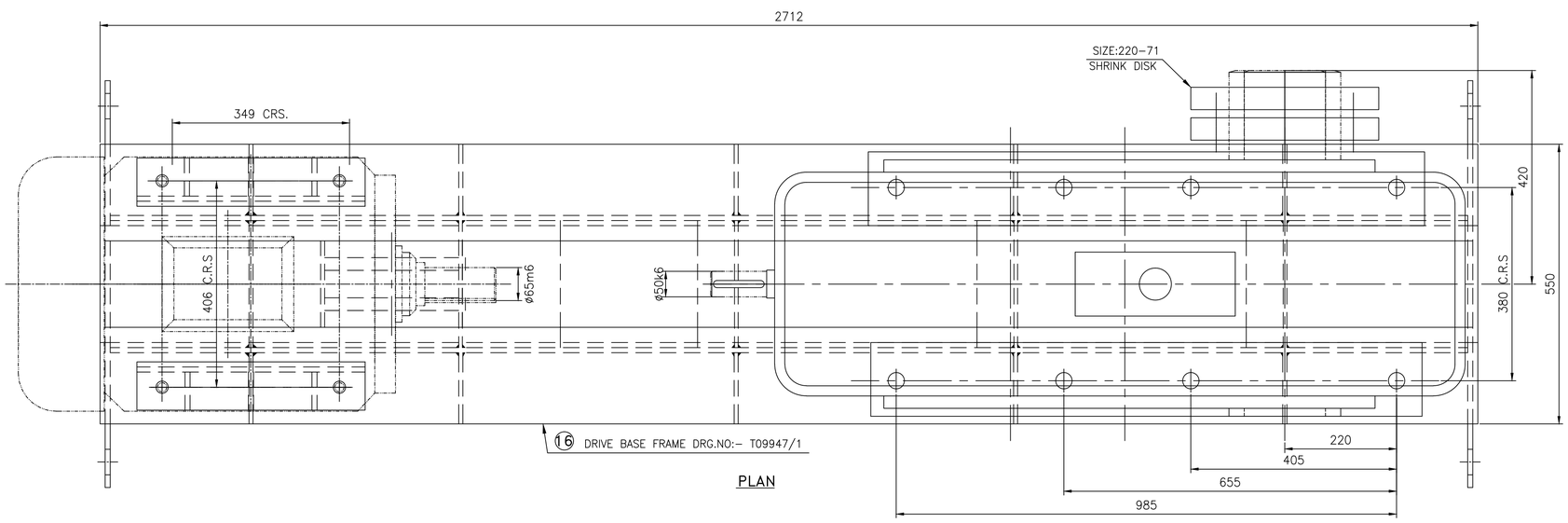

PLAN

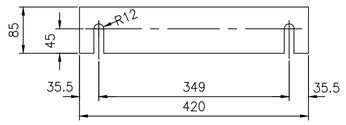

⑪ SHIM PLATE 1 THK x 85 X 420 LG.
⑫ SHIM PLATE 2 THK x 85 x 420 LG.
⑬ SHIM PLATE 0.5 THK x 85 x 420 LG.

⑤ HEX.BOLT M20 x 90 IS:1364 S 8.8
⑥ HEX. NUT M20 IS:1364 S8.0
⑦ SPRING WASHER B 20 IS:3063
8 HEX.BOLT M30x140 IS:1364 S 8.8
9 SPRING WASHER B30 IS:3063
10 HEX.NUT M30 IS:1364 S 8.0

DRIVE SPECIFICATION:-

① GEAR BOX :
BEVEL HELICAL HOLLW SHAFT GEAR UNIT
SIZE :- KCH-315
NOMINAL RATIO :- 71 : 1 HANDING :- R.H
DRG.NO.:- 8052003
MAKE:- ELECON
SHRINK DISC : 220-71

② COUPLING :
FLUID COUPLING WITH ELIGN GEAR COUPLING
TYPE & SIZE :- CDR-R-420 + ED 1000
OIL FILLING ANGLE : 73°
OIL CAPACITY :- 9.64 LTR.
MAKE:- ELECON

③ MOTOR :
55 KW x 1500 RPM AC.SQ.CAGE
FRAME SIZE : - ND250M
DRG.NO. ND250B3,V6TOP
MAKE:- CGL

NOTE :-
- ALL DIMENSIONS ARE IN M.M.

ELE.	STRU	MECH	SEC	NAME	DATE	ISSUE	AMENDMENTS

DRAWN	S.A.Patel	09/10/12
CHECK	R.K.Patel	
APPROVED SEC.	R.R.Panchal	
APPROVED MEC	RPJ / MVP	
APPROVED STR.		
APPROVED ELE.		
SCALE :		

SCRAPER DRIVE UNIT
FOR MAIN SCRAPER BOOM

THIS DRAWING IS THE PROPERTY OF ELECON ENGINEERING CO. LTD. VALLABH VIDYANAGAR GUJARAT. LOANED TO THE RECIPIENT WHO AGREES THAT IT SHALL NOT BE GIVEN OUT COPIED OR DUPLICATED FOR THE USE OF ANOTHER BUT USED ONLY BY THE RECIPIENT FOR THE PURPOSE OF MAINTAINING THE EQUIPMENT TO WHICH IT REFERS.

MAIN GR. NO. 18

SUB GR. NO. 007

ELECON

ORDER NO. CO/2281

M/C NO. HM/573 HM/574

DRG. NO. T10300/1

ISSUE

T09946/1 T09036/1 T07946/1 T02982/0 T07582/1

USER SIZE 820x570

ELECON EPC
ELECON EPC PROJECTS LIMITED

SCRAPER DRIVE ASSEMBLY (MAIN BOOM)

Group No. : 18/007 Drg.No. : T10300/1

Sr.No.	Description	Qty.	Part No.
1	Bevel Helical Reduction Gear Unit with Solid Shaft Type : KCH – 315, Ratio 71 : 1 Handing : R.H. Drg.No. : 8052003 Shrink Disc : 220-71 Make : Elecon	1	T10300/1
2	Fluid Coupling with Geared Coupling Type & Size : CDR-R 420 with ED-1000 Oil Filling angle = 73 Degree Oil Capacity = 9.64 Ltrs. Bore : 65mm Motor Side 50mm Gear Side Make : Elecon	1	T10300/1
3	Motor 55 KW x 1500 RPM AC SQ. Cage Frame Size : ND 250 M Drg. No. : ND250B3,V6TOP Make : CGL.	1	T10300/1
4	Spacer 100 O/D x 65 I/D x 64 Thk.	1	T09989/4
4A	Spacer 100 O/D x 50 I/D x 34 Thk.	1	T09990/4
5	Hex. Bolt M20 x 90 Lg.	4	IS:1364 S8.8
6	Hex. Nut M20	4	IS:1364 S8.0
7	Spring Washer B20	4	IS:3063
8	Hex. Bolt M30 x 140 Lg.	8	IS:1364 S8.8
9	Spring Washer B30	8	IS:3063
10	Hex. Nut M30	8	IS:1364 S8.0
11	Shim Plate	8	T10300/1
12	Shim Plate	2	T10300/1
13	Shim Plate	4	T10300/1

ELECON EPC PROJECTS LIMITED

Group No. : 18/007 Drg.No. : T10300/1

Sr.No.	Description	Qty.	Part No.
14	Name Plate	1	G05642/3
15	Alu. Hammer Drive Rivet 3Dai x 6 Lg.	4	T10300/1
16	Base Frame	1	T09947/1

DO NOT SCALE

IF IN DOUBT ASK

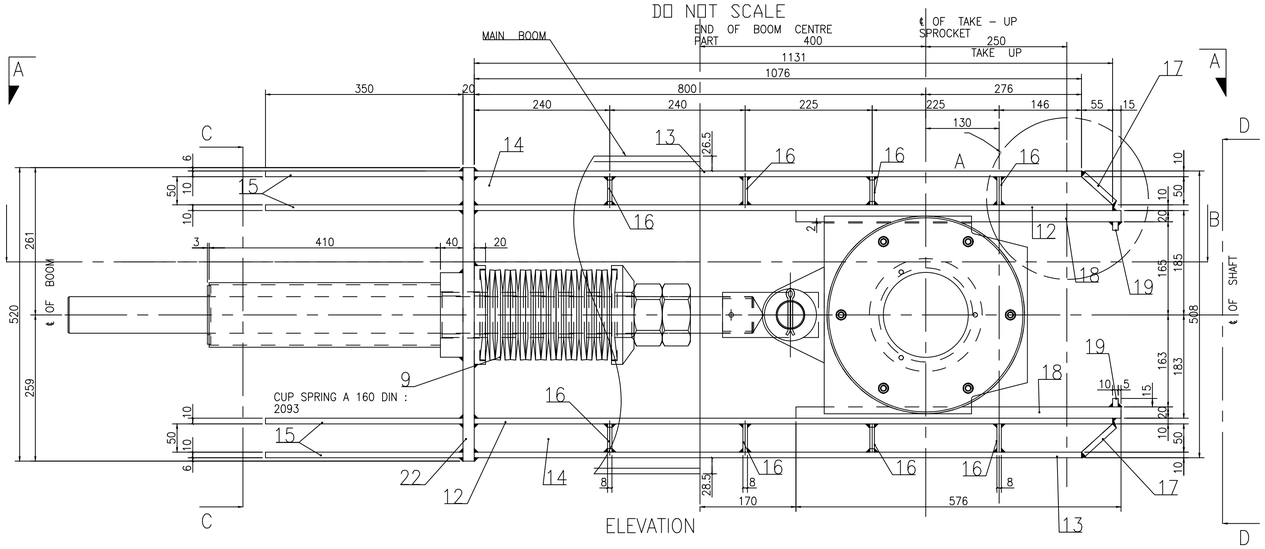

ELEVATION

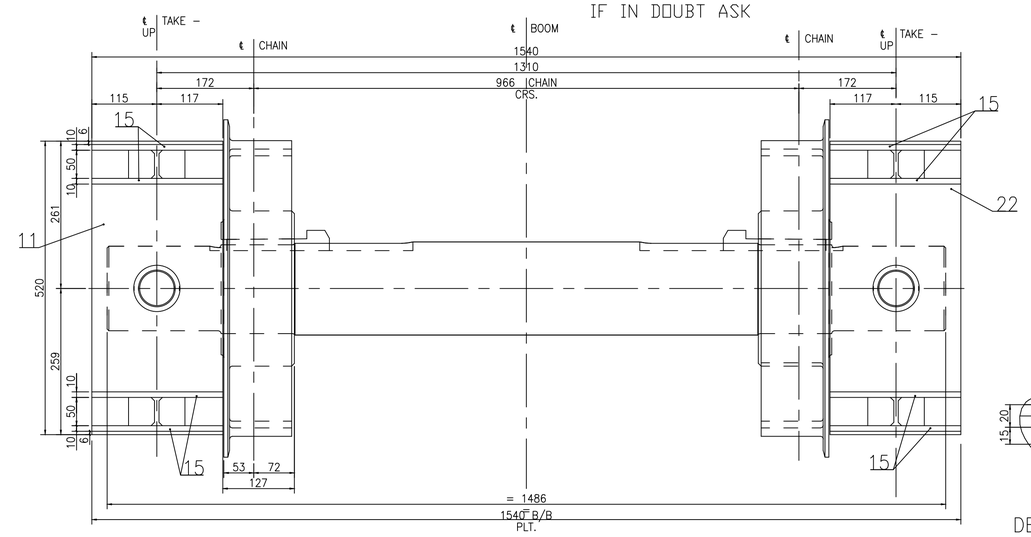

SECTION : C – C

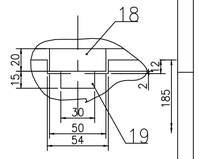

DETAIL : B

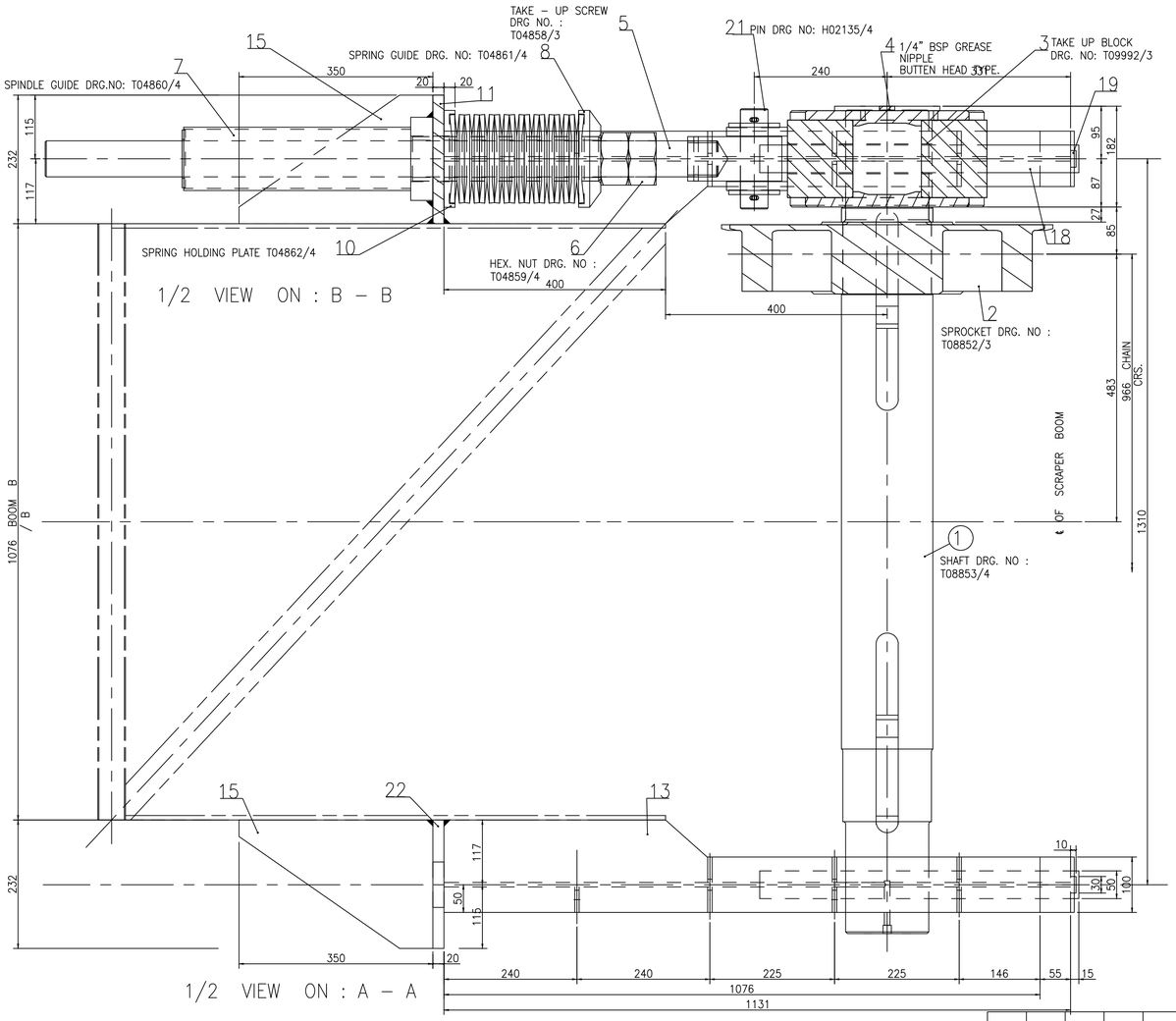

1/2 VIEW ON : B – B

1/2 VIEW ON : A – A

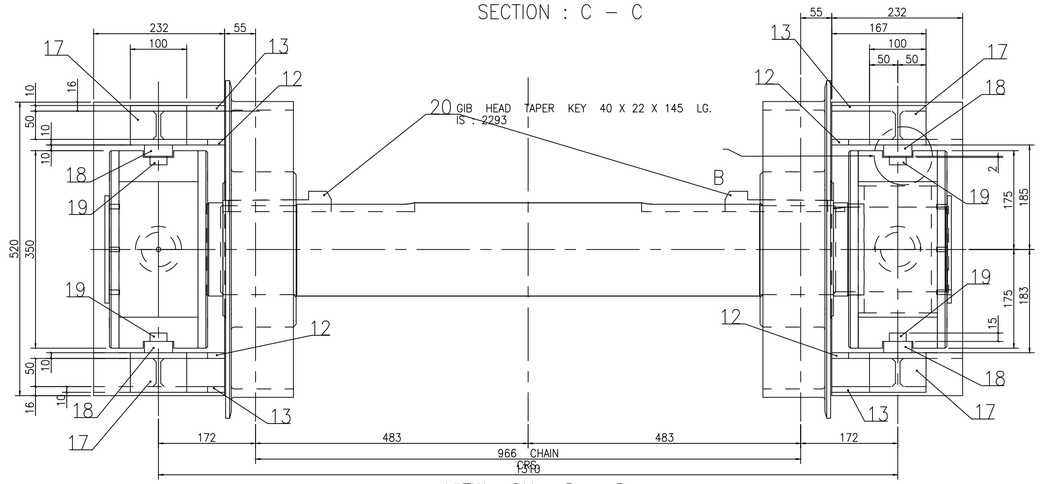

VIEW ON : D – D

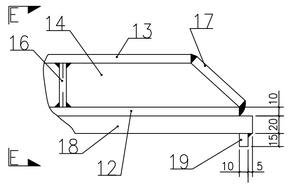

DETAIL : A

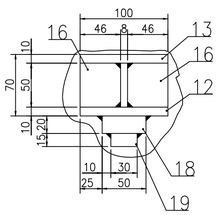

VIEW ON : E – E

ELE	STRU	MECH	SEC	DATE	NAME	ISSUE	AMENDMENTS

DRAWN		MEHUL DAVE	13/8/2012
CHECKED		R. K. PATEL	13/8/2012
APPROVED	SEC.	R. R. PANCHAL	
	MECH.	R. P. JARIA	
	STRU.		
	ELE.		
SCALE :			A1

TAKE – UP UNIT FOR MAIN BOOM

THIS DRAWING IS THE PROPERTY OF ELECON ENGINEERING CO. LTD. VALLABH VIDYANAGAR GUJARAT. LOANED TO THE RECIPIENT WHO AGREES THAT IT SHALL NOT BE GIVEN OUT COPIED OR DUPLICATED FOR THE USE OF ANOTHER BUT USE ONLY BY THE RECIPIENT FOR THE PURPOSE OF MAINTAINING THE EQUIPMENT TO WHICH IT REFERS.

MAIN GR. NO	18
SUB GR. NO	011
ORDER NO.	
MACHINE NO.	HM/545
DRAWING NO.	T09943/1M
ISSUE	

ELECON

USER SIZE 820x570

ELECON EPC
ELECON EPC PROJECTS LIMITED

TAKE-UP UNIT ASSEMBLY (MAIN BOOM)

Group No. : 18/011 Drg.No. : T09943/1

Sr.No.	Description	Qty.	Part No.
1	Shaft	1	T08853/4
2	Sprocket	2	T08852/3
3	Take-up Block	2	T09992/3
3.1	MS Profile Plate	1	T09992/3
3.2	Deep Groove Single Row Ball Bearing	2	T09992/3
3.3	Distance Ring	1	T02363/4
3.4	Distance Ring	1	T02364/4
3.5	Distance Ring	1	T08854/4
3.6	Bearing Cover	1	H01232/3
3.7	Bearing Cover	1	T02383/3
3.8	MS Plate	2	T09992/3
3.9	Hex. Socket Head Screw M10 x 30 Lg.	12	IS:2269
3.10	Spring Washer B10	12	IS:3063
3.11	End Cover	1	T05398/4
3.12	Hex. Screw M8 x 20 Lg.	3	IS:1363 S4.6
3.13	Spring Washer B8	3	IS:3063
4	Grease Nipple Button Head 1/4" BSP	2	BS:1486
5	Take-up Screw	2	T04858/3
6	Hex. Nut	4	T04859/4
7	Guide for Spindle	2	T04860/4
8	Spring Guide	2	T04861/4
9	Disc Spring	36	DIN:2093
10	Spring Guide	2	T04862/4

ELECON EPC PROJECTS LIMITED

Group No. : 18/011 Drg.No. : T09943/1

Sr.No.	Description	Qty.	Part No.
11 to 19	Structural Plate	-	T09943/1
20	Gib Head Key	2	IS:2293
21	Pin Assembly for Take-up Screw	2	H02135/4
21.1	Pin 50 Dia. x 181 Lg.	1	H02135/4
21.2	Punched Washer A52	2	IS:2016
21.3	Split Pin 10 Dia. x 70 Lg.	2	IS:549
22	MS Plate	1	T09943/1

DO NOT SCALE

IF IN DOUBT ASK

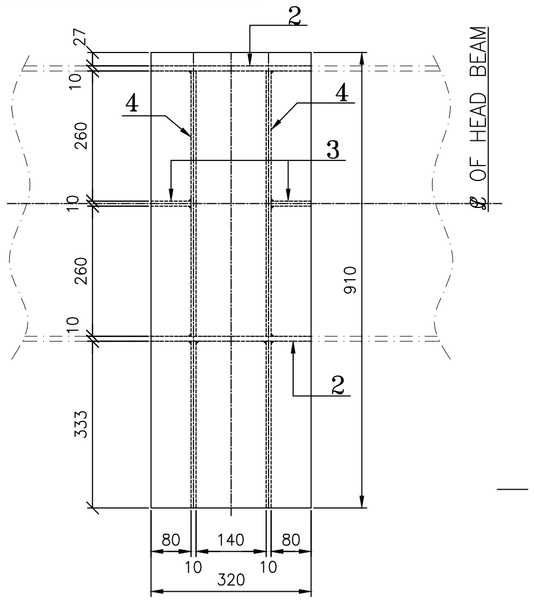

VIEW ON B-B

2 PLT. 10 THKx82x320 LG.
4 PLT. 10 THKx82x530 LG.

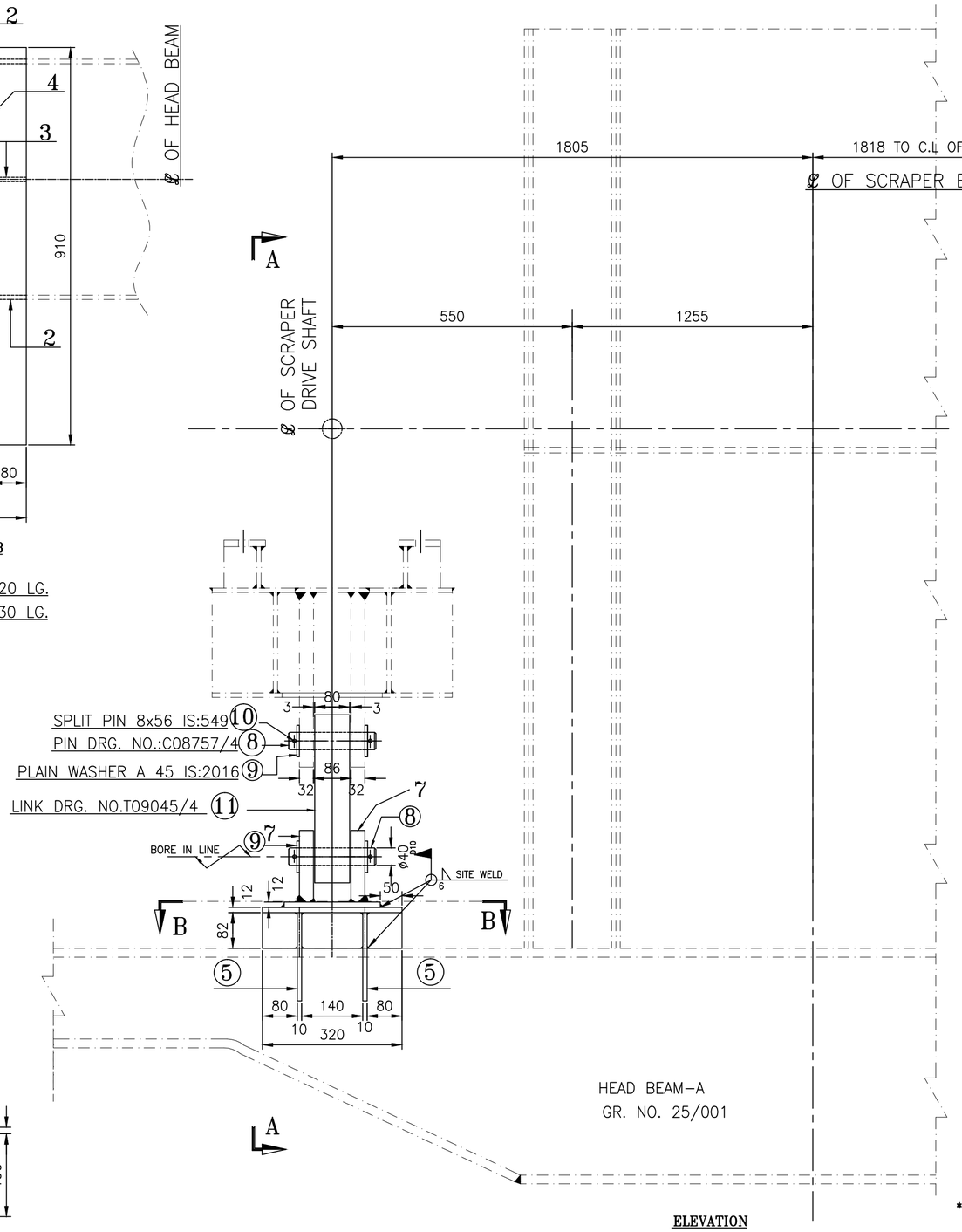

ELEVATION

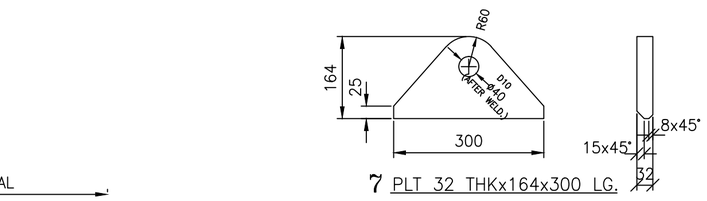

7 PLT 32 THKx164x300 LG.

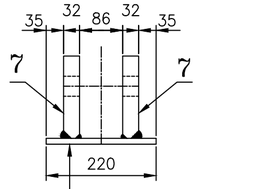

6 PLT. 12THKx220x300 LG.

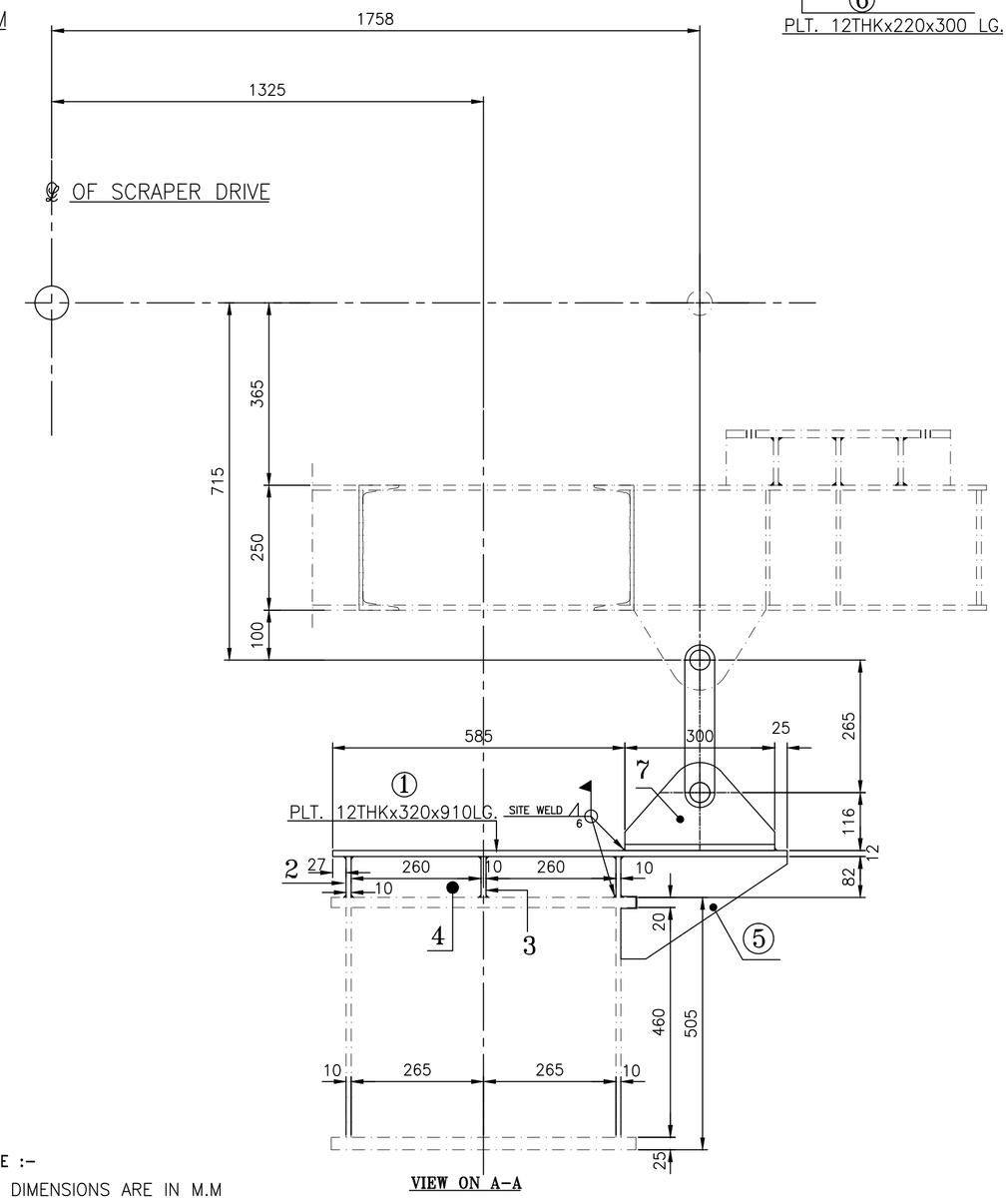

VIEW ON A-A

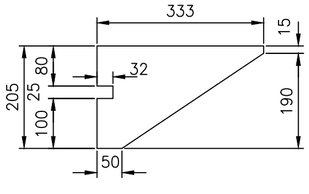

5 PLT. 10 THKx205x333 LG.

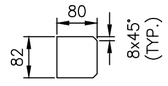

3 PLT. 10 THKx80x82 LG.

NOTE :-

* ALL DIMENSIONS ARE IN M.M
* SITE WELD IS SHOWN AS THUS

TOLERANCE	
	D10
ø40	+0.180 +0.080

ELE.	STRU	MECH	SEC	NAME	DATE	ISSUE	AMENDMENTS

DRAWN		S.A.Patel	09.10.12
CHECK		R.K.Patel	
APPROVED	SEC.	R.R.Panchal	
	MEC	R.P.Jaria	
	STR.		
	ELE.		

SCALE :

TORQUE ARM FOR MAIN BOOM SCRAPER DRIVE UNIT

THIS DRAWING IS THE PROPERTY OF ELECON ENGINEERING CO. LTD. VALLABH VIDYANAGAR GUJARAT. LOANED TO THE RECIPIENT WHO AGREES THAT IT SHALL NOT BE GIVEN OUT COPIED OR DUPLICATED FOR THE USE OF ANOTHER BUT USED ONLY BY THE RECIPIENT FOR THE PURPOSE OF MAINTAINING THE EQUIPMENT TO WHICH IT REFERS.

MAIN GR. NO. 18

SUB GR. NO. 015

ELECON

ORDER NO. CO/2281

M/C NO. HM/573 HM/574

DRG. NO. T10301/2

ISSUE

T10013/2 T09044/2A

USER SIZE 570x395

ELECON EPC PROJECTS LIMITED

TORQUE ARM FOR SCRAPER DRIVE (MAIN BOOM)

Group No. : 18/015 Drg.No. : T10301/2

Sr.No.	Description	Qty.	Part No.
1 to 7	Structural Plate	-	T10301/2
8	Pin 40 Dia x 200 Lg.	2	C08757/4
9	Punched Washer A45	4	IS:2016
10	Split Pin 8 Dia x 56 Lg.	4	T10301/2
11	Link Plate	1	T09045/4

DO NOT SCALE

IF IN DOUBT ASK

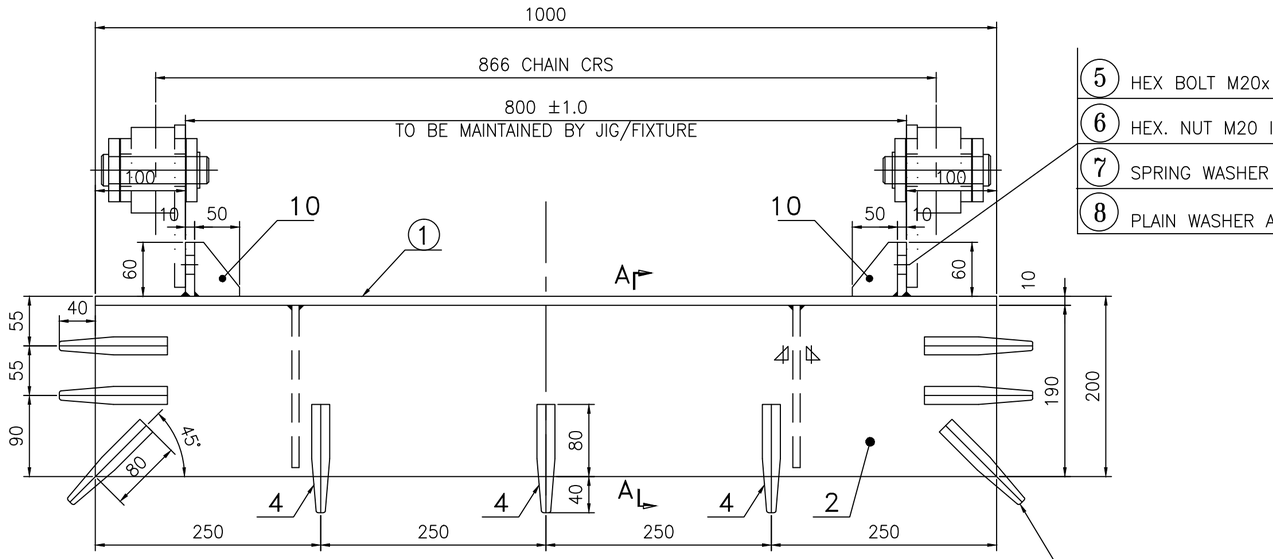

ELEVATION

5	HEX BOLT M20x 65 IS:1364 10.9
6	HEX. NUT M20 IS:1364 -10
7	SPRING WASHER B20 IS:3063
8	PLAIN WASHER A22 IS:2016

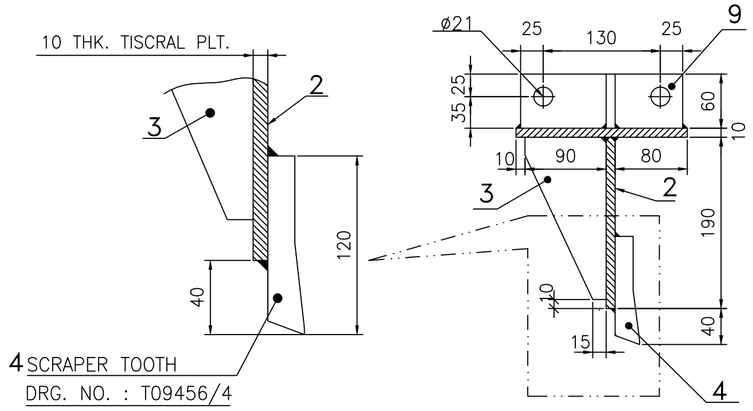

SECTION AT 'A-A'

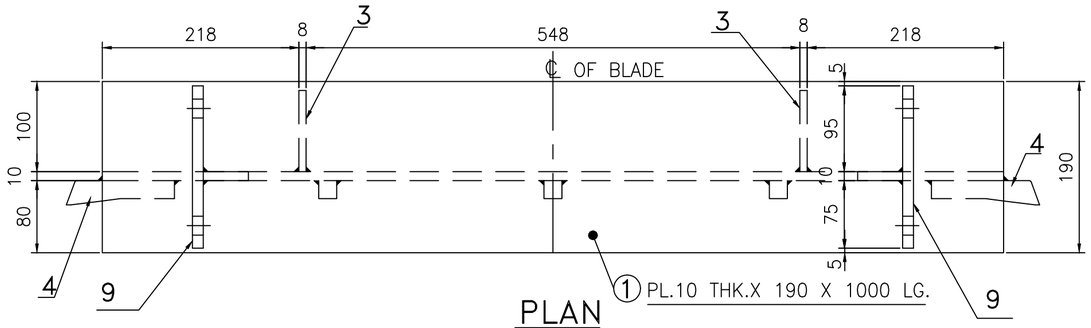

PLAN

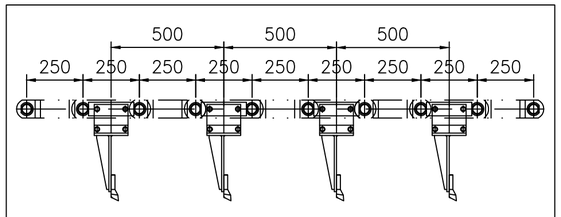

FIXING OF BLADE WITH CHAIN

QTY. OF SCRAPER BLADE = 60 NOS./MACHINE

ELE.	STRU	MECH	SEC	NAME	DATE	ISSUE	AMENDMENTS

DRAWN		R. K. Patel	03/12/12
CHECK			
APPROVED	SEC.		
	MEC		
	STR.		
	ELE.		

SCALE :

ASSY.OF BLADE 1000 X 200 (FOR AUX. BOOM)

THIS DRAWING IS THE PROPERTY OF ELECON ENGINEERING CO. LTD. VALLABH VIDYANAGAR GUJARAT. LOANED TO THE RECIPIENT WHO AGREES THAT IT SHALL NOT BE GIVEN OUT COPIED OR DUPLICATED FOR THE USE OF ANOTHER BUT USED ONLY BY THE RECIPIENT FOR THE PURPOSE OF MAINTAINING THE EQUIPMENT TO WHICH IT REFERS.

MAIN GR. NO. 19

SUB GR. NO. 004

ORDER NO.

M/C NO.

DRG. NO. T09455/2M

ISSUE

ELECON

USER SIZE 570x395

ELECON EPC PROJECTS LIMITED

ASSEMBLY OF BLADE (AUXILIARY BOOM)- 1000x200

Group No. : 19/004 Drg.No. : T09455/2

Sr.No.	Description	Qty.	Part No.
1 to 3	Structural Plate	-	T09455/2
4	Teeth	9	T09456/4
5	Hex. Bolt M20 x 65 Lg	4	IS:1364 S10.9
6	Hex. Nut M20	4	IS:1364 S10.0
7	Spring Washer B20	4	IS:3063
8	Plain Washer A22	4	IS:2016
9 & 10	Structural Plate	-	T09455/2

NOTE : MACHINE CONTAINING SIXTY TIMES THE ABOVE LISTED QTY.

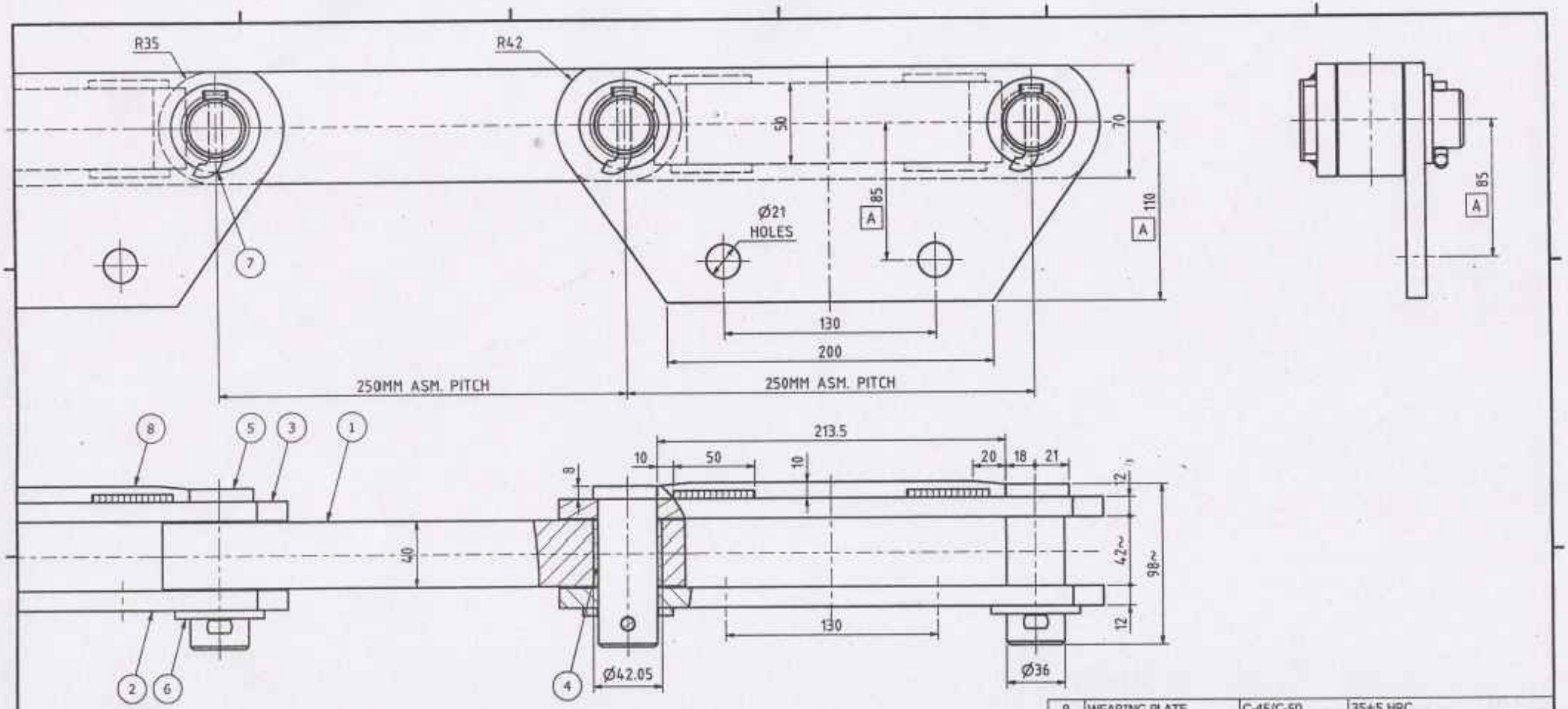

ITEM	DESCRIPTION	MATERIAL	TREATMENT
8	WEARING PLATE	C-45/C-50	35±5 HRC
7	COTTER PIN	M.S.	-----
6	WASHER	M.S.	-----
5	HEAD BOLT / PIN	16MnCr5/EN-19	CASE / INDUCTION HARD. TO 55±5 HRC, DEPTH 1.5 MM MAX.
4	BUSH / LINK BUSH	EN-45	42±5 HRC
3	OUTER LINK	C-45/C-50	35±5 HRC
2	ATT. OUTER LINK	C-45/C-50	35±5 HRC
1	INNER / CENTRAL LINK	C-45/C50 FORGED STEEL	35±5 HRC

NOTES :

1. TOLERANCE ON ALL THE DIMENSIONS WILL BE GIVEN TO SUIT THE PROPER CHAIN MANUFACTURING.
2. TOLERANCE ON PINS, BUSHES & ROLLERS SHOULD BE SUCH THAT THE MAX. CLEARANCE NOT TO EXCEED 0.4 M.M.
3. AVERAGE BREAKING LOAD OF THE CHAIN WILL BE- **50,000 KGS. (500 KN).**
4. ALL THE CHAIN WILL BE PRE LOADED AT 1/3rd OF THE BREAKING LOAD.
5. THE PERMISSIBLE LENGTH TOLERANCE IN ASSEMBLED CHAIN LENGTH 10'.0" WILL BE +0.25/-0.00 % AS PER ISO 1977/1.

(RC-12-2591)
ALL DIMENSIONS ARE IN M.M.

REF.: EECL, DRG# SCR. CHAIN/3.8.4

DRAWN	WORKS MANAGER	H.T. DEPARTMENT	Q.C. DEPARTMENT	Date
KIRAN PATEL				28/04/2012

ROLCON ENGINEERING CO. LTD.
POST BOX NO. 26,
ANAND SOJITRA ROAD
VALLABH VIDYANGAR - 388 120
GUJARAT, INDIA

250 MM PITCH BLOCK LINK TYPE SCRAPER CHAIN

DRG.# **RC-12-4418** | Revision **A** | Sheet 1 / 1

REV	DESCRIPTION	APPROVED	DATE
A	PARTY'S EMAIL ON DT. 19.09.2013 WITH DRG. COMMENT, MARK A DIMENSIONS CHANGED.		20/09/2013

ELECON EPC
ELECON EPC PROJECTS LIMITED

SCRAPER BLOCK LINK CHAIN (AUXILIARY BOOM)

Group No. : 19/005 Drg.No. : RC-12-4418

Sr.No.	Description	Qty.	Part No.
1	Block Link Chain 250 mm Pitch R.H. Execution = 30.000 Mtrs. (120 Nos. of Link) L.H. Execution = 30.000 Mtrs. (120 Nos. of Link) Breaking Load of Chain = 5000 Kgs. (500 KN) Blade Attachment Pitch = 500 mm Ref. Drg. No. RC-12-4418 Make : Rolcon	1	RC-12-4418

DO NOT SCALE

IF IN DOUBT ASK

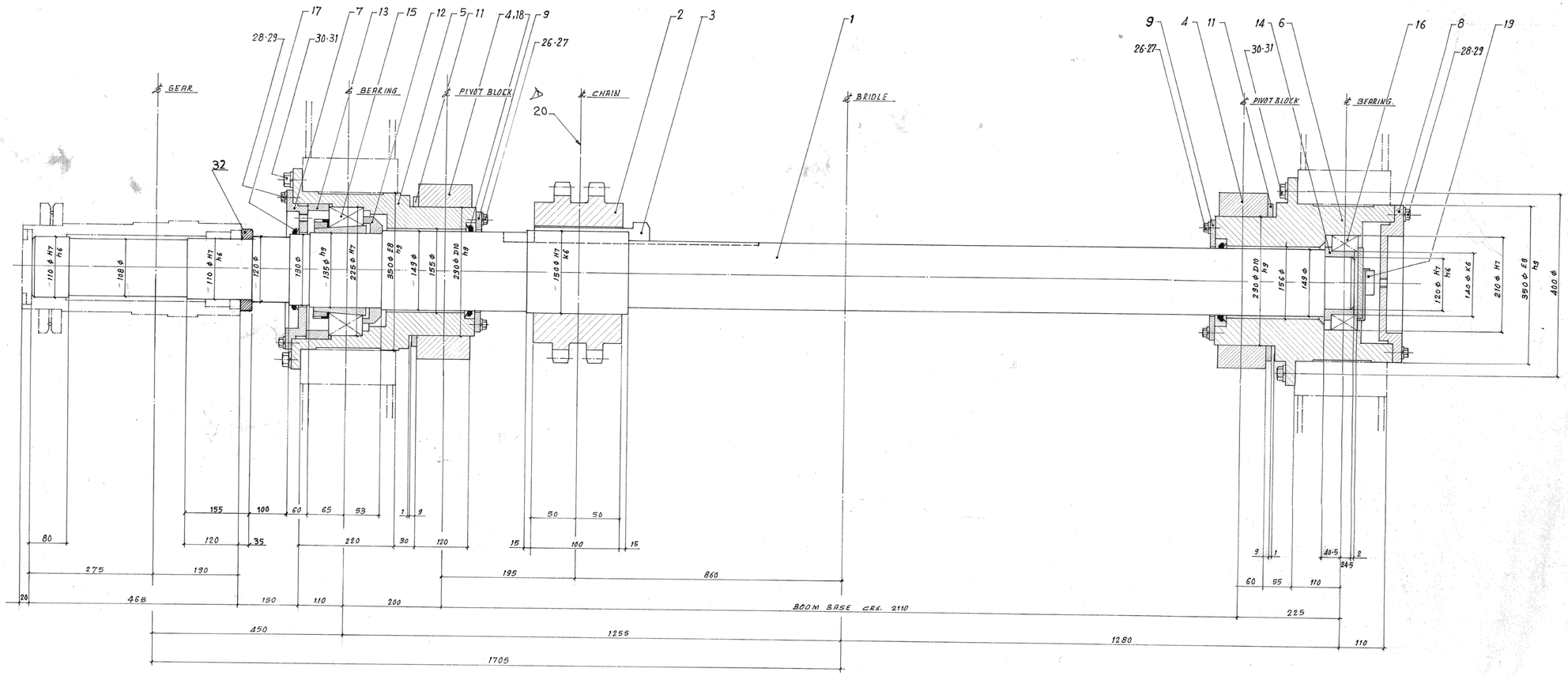

SR. NO.	DRG. NO.	DESCRIPTION	SR. NO.	DRG. NO.	DESCRIPTION
1	T09783/2	DRIVE SHAFT	19	R.4C.19014	SHAFT END PROTECTION COVER
2	C08773/3	SPROCKET	19-001	R.4C.19016	COVER
3	--	GIB HEAD KEY	19-002	R.4C.19015	LOCK PLATE
4	T00512/3	BEARING HOUSING SUPPORT	19-003	--	HEX. SCREW M24X70 LG. IS:1363
5	C08603/2	BEARING HOUSING	19-004	--	CYLINDRICAL PIN 10XM6X50 IS:2393
6	T00601/2	BEARING HOUSING	20	--	DUPLEX CHAIN 1.5" PITCH
7	C08604/3	HOUSING COVER	26	--	HEX. SCREW M8X20 LG. IS:1363
8	R.3C.19017	HOUSING COVER	27	--	SPRING WASHER B8 IS:3063
9	C08605/4	COVER	28	--	HEX. SCREW M12X40 LG. S8.8 IS:1363
11	C07507/4	SPACER	29	--	SPRING WASHER B12 IS:3063
12	C08606/4	DISTANCE RING	30	--	HEX. SCREW M20X70 LG. S8.8 IS:1363
13	C08607/4	DISTANCE RING	31	--	SPRING WASHER B20 IS:3063
14	R.4C.19013	COLLER BUSH	33	--	GREASE NIPPLE 1/8" BSP
15-001	SPH. ROLLER BRG.	23030 K			
15-002	ADAPTER SLEEVE	H 3030			
16	SPH. ROLLER BRG.	N023028 C			
17	V-RING	V-130S			
18	V-RING	V-150S			

ISSUE	DATE	SIGN.	AMENDMENTS

DRAWN	R. K. Patel	03/12/12
CHECKED		
APPROVED SEC.		
APPROVED MECH.		
APPROVED STRU.		
APPROVED ELE.		

SCALE:-

DRIVE SHAFT ASSEMBLY FOR AUXILIARY BOOM.

THIS DRAWING IS THE PROPERTY OF ELECON ENGINEERING CO. LTD. VALLABH VIDYANAGAR GUJARAT. LOANED TO THE RECIPIENT WHO AGREES THAT IT SHALL NOT BE GIVEN OUT COPIED OR DUPLICATED FOR THE USE OF ANOTHER BUT USED ONLY BY THE RECIPIENT FOR THE PURPOSE OF MAINTAINING THE EQUIPMENT TO WHICH IT REFERS.

MAIN GR. NO. 19

SUB GR. NO. 006

ORDER NO.

M/C NO.

ELECON

DRG. NO. T09782/1M

ISSUE

J J A I-5000-4-80

ELECON EPC PROJECTS LIMITED

SCRAPER DRIVE SHAFT ASSEMBLY (AUXILIARY BOOM)

Group No. : 19/006 Drg.No. : T09782/1

Sr.No.	Description	Qty.	Part No.
1	Drive Shaft	1	T09783/2
2	Sprocket	1	C08773/3
3	Gib Head Key	1	IS:2293
4	Bearing Housing Support	2	T00512/3
4.1	Profile Plate	1	T00512/3
4.2	Profile Plate	1	T00512/3
4.3	Rec. Head Bolt with Nut	4	T00520/4
4.3.1	Rec. Head Bolt	1	T00520/4
4.3.2	Hex. Nut M22	1	IS:1364 S8.8
4.3.3	Hex. Lock Nut M22	1	IS:1364 S8.8
4.4	Spring Washer B22	4	IS:3063
4.5	Spring Dowel 12 Dia. x 60mm	2	IS:5988
5	Bearing Housing	1	C08603/2
6	Bearing Housing	1	T00601/2
7	Housing Cover	1	C08604/3
8	Housing Cover	1	R.3C.19017
9	Bearing Cover	2	C08605/4
10	Omitted	-	-
11	Spacer	2	C07507/4
12	Distance Ring	1	C08606/4
13	Distance Ring	1	C08607/4
14	Collar Bush	1	R.4C.19013
15.1	Sph. Roller Bearing	1	T09782/1

ELECON EPC
ELECON EPC PROJECTS LIMITED

Group No. : 19/006 Drg.No. : T09782/1

Sr.No.	Description	Qty.	Part No.
15.2	Bearing Adaptor Sleeve	1	T09782/1
16	Sph. Roller Bearing	1	T09782/1
17	Rubber Seal Ring "V" type	1	T09485/4
18	Rubber Seal Ring "V" type	2	T09485/4
19	Shaft End Protection	1	R.4C.19014
19.1	Cover	1	R.4C.19016
19.2	Lock Plate	1	R.4C.19015
19.3	Hex. Screw M24 x 70 Lg.	1	R.4C.19014
19.4	Cylindrical Pin M6 x 50	1	R.4C.19014
20	Chain Duplex 1.5" (38.1) Pitch Rolkobo No. : 0270.0 Length : 6.667 M Make : Rolcon 175 Link including 1 no. Conn. Link	1	T09782/1
21 to 25	Omitted	-	-
26	Hex. Screw M8 x 20 Lg.	8	IS:1363 S4.6
27	Spring Washer B8	8	IS:3063
28	Hex. Screw M12 x 40 Lg.	12	IS:1364 S8.8
29	Spring Washer B12	12	IS:3063
30	Hex. Screw M20 x 70 Lg.	12	IS:1364 S 8.8
31	Spring Washer B20	12	IS:3063
32	Spacer	1	C14807/4
33	Grease Nipple 1/8" BSP	1	T09782/1

DO NOT SCALE

IF IN DOUBT ASK

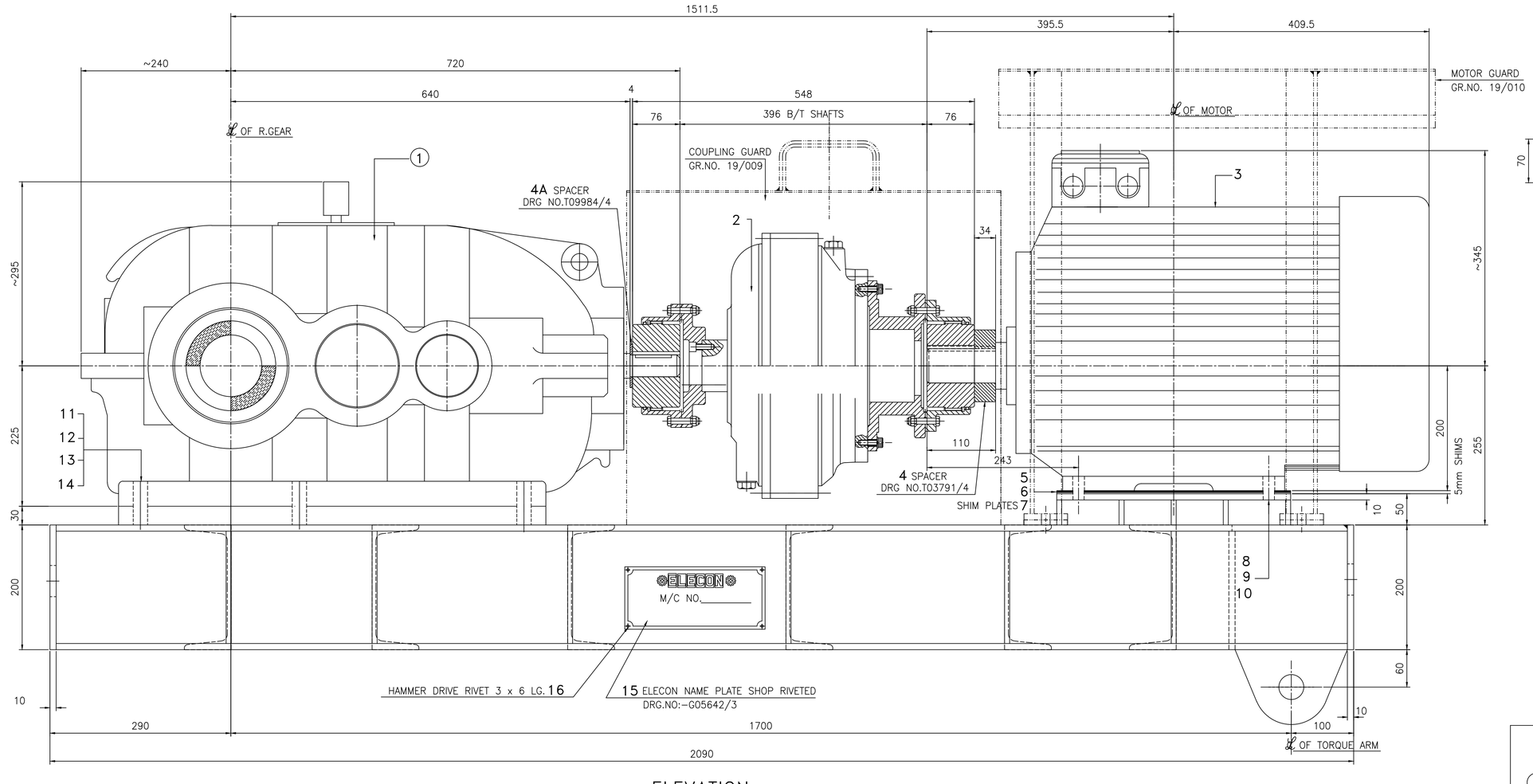

ELEVATION

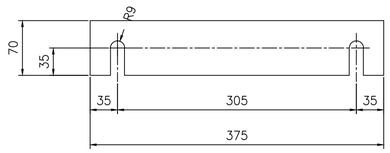

5 SHIM PLATE 1 THK x 70 x 375 LG.
6 SHIM PLATE 2 THK x 70 x 375 LG.
7 SHIM PLATE 0.5 THK x 70 x 375 LG.

8 HEX.BOLT M16x65 IS:1364 S 8.8
9 HEX.NUT M16 IS:1364 S 8.0
10 SPRING WASHER B16 IS:3063

11 HEX.BOLT M20x120 IS:1364 S 8.8
12 HEX.NUT M20 IS:1364 S 8.0
13 TAPER WASHER M22 IS:5372
14 SPRING WASHER B20 IS:3063

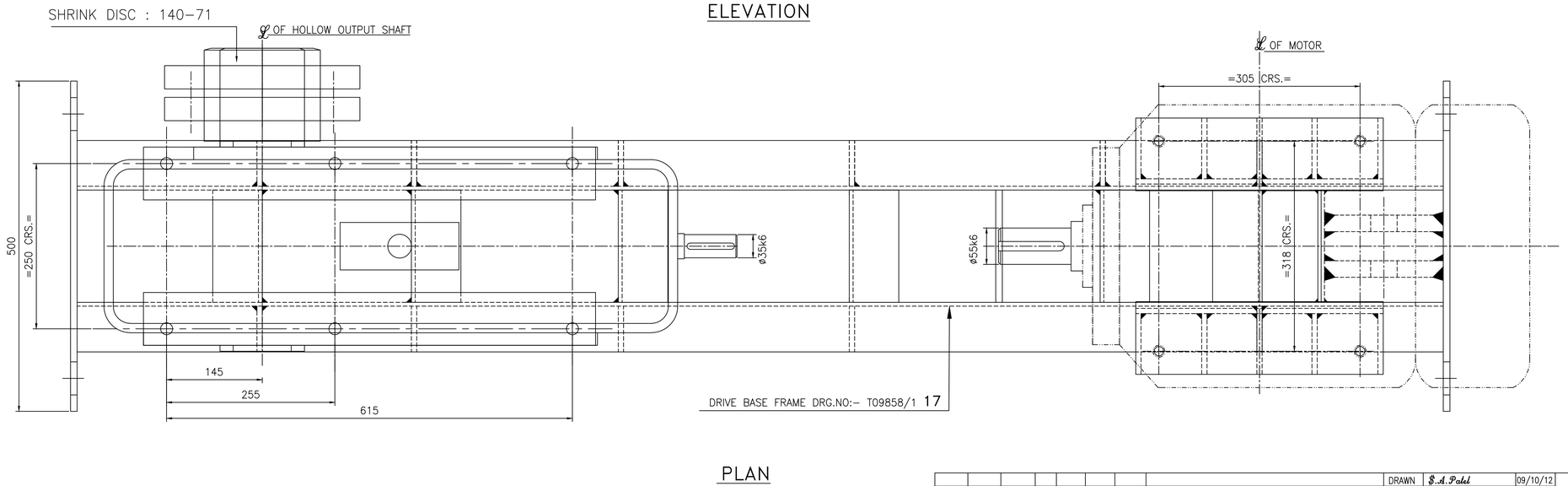

PLAN

DRIVE SPECIFICATION:-

1 GEAR BOX : BEVEL HELICAL HOLLW SHAFT GEAR UNIT
SIZE :- KCH-200
NOMINAL RATIO :- 28:1, HANDING:- L.H
DRG.NO.:- 8052004
MAKE:- ELECON
SHRINK DISC : 140-71

2 COUPLING : HYDROKINETIC FLUID COUPLING WITH ELIGN GEAR COUPLING.
TYPE & SIZE :- CDR-R 370 + ED 1000
OIL FILLING ANGLE : 72°
OIL CAPACITY : 6.8 ltr.
MAKE:- ELECON

3 MOTOR : 30 KW x 1500 RPM AC.SQ.CAGE
FRAME SIZE : - ND200L
DRG.NO. :- ND200B3,V6TOP
MAKE:- CGL

NOTE :-

* ALL DIMENSIONS ARE IN M.M.
* ALL ERECTION ITEMS ARE SHOWN THUS. ◯

ELE.	STRU	MECH	SEC	NAME	DATE	ISSUE	AMENDMENTS

DRAWN	S.A.Patel	09/10/12
CHECK	R.K.Patel	
APPROVED SEC.	R.P.Faria	
APPROVED MEC	R.R.Panchal	
APPROVED STR.		
APPROVED ELE.		

SCALE :

SCRAPER DRIVE UNIT
FOR AUX. SCRAPER BOOM

THIS DRAWING IS THE PROPERTY OF ELECON ENGINEERING CO. LTD. VALLABH VIDYANAGAR GUJARAT. LOANED TO THE RECIPIENT WHO AGREES THAT IT SHALL NOT BE GIVEN OUT COPIED OR DUPLICATED FOR THE USE OF ANOTHER BUT USED ONLY BY THE RECIPIENT FOR THE PURPOSE OF MAINTAINING THE EQUIPMENT TO WHICH IT REFERS.

MAIN GR. NO. 19

ELECON

SUB GR. NO. 007

ORDER NO. CO/2281

M/C NO. HM/573 HM/574

DRG. NO. T10299/1

ISSUE

T02563/1 T07987/1 T09857/1 T09015/1

USER SIZE 820x570

ELECON EPC
ELECON EPC PROJECTS LIMITED

SCRAPER DRIVE ASSEMBLY (AUXILIARY BOOM)

Group No. : 19/007 Drg.No. : T10299/1

Sr.No.	Description	Qty.	Part No.
1	Bevel Helical Reduction Gear Unit with Solid Shaft Type : KCH – 200, Ratio 28 : 1 Handing : L.H. Drg.No. : 8052004 Shrink Disc : 140-71 Make : Elecon	1	T10299/1
2	Fluid Coupling with Geared Coupling Type & Size : CDR-R 370 with ED-1000 Oil Filling angle = 72 Degree Oil Capacity = 6.8 Ltrs. Bore : 55mm Motor Side 35mm Gear Side Make : Elecon	1	T10299/1
3	Motor 30 KW x 1500 RPM AC SQ. Cage Frame Size : ND 200 L Drg. No. : ND200B3,V6TOP Make : CGL.	1	T10299/1
4	Spacer 115 O/D x 55 I/D x 34 Thk.	1	T03791/4
4A	Spacer 75 O/D x 35 I/D x 4 Thk.	1	T09984/4
5	Shim Plate	8	T10299/1
6	Shim Plate	2	T10299/1
7	Shim Plate	4	T10299/1
8	Hex. Bolt M16 x 65 Lg.	4	IS:1364 S8.8
9	Hex. Nut M16	4	IS:1364 S8.0
10	Spring Washer B16	4	IS:3063
11	Hex. Bolt M20 x 120 Lg.	6	IS:1364 S8.8
12	Hex. Nut M20	6	IS:1364 S8.0
13	Taper Washer M22	6	IS:5372

ELECON EPC PROJECTS LIMITED

Group No. : 19/007 Drg.No. : T10299/1

Sr.No.	Description	Qty.	Part No.
14	Spring Washer B20	6	IS:3063
15	Name Plate	1	G05642/3
16	Alu. Hammer Drive Rivet 3Dai x 6 Lg.	4	T10299/1
17	Base Frame	1	T09858/1

DO NOT SCALE

IF IN DOUBT ASK

DRG.NO.	ISSUE

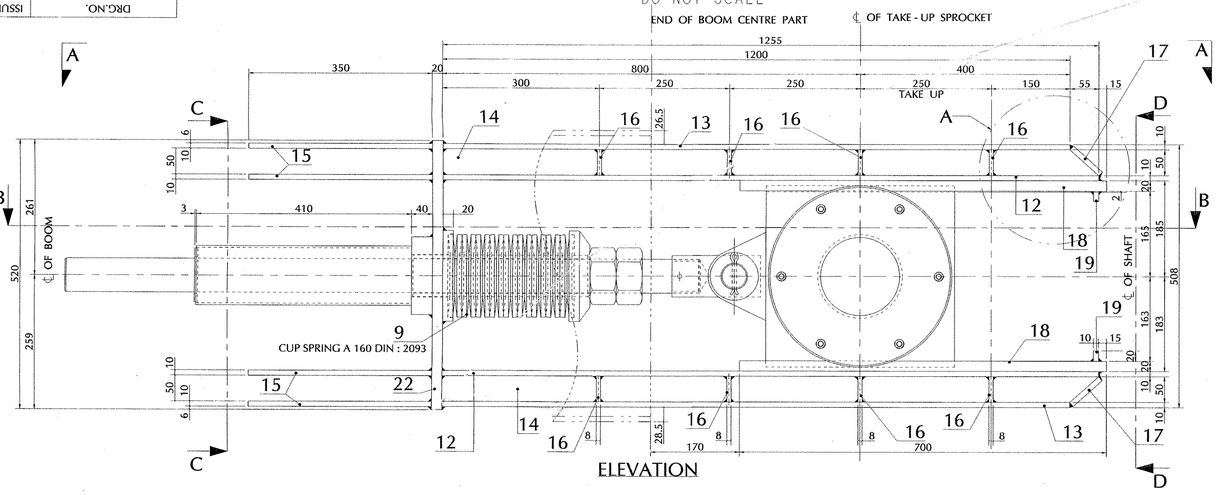

ELEVATION

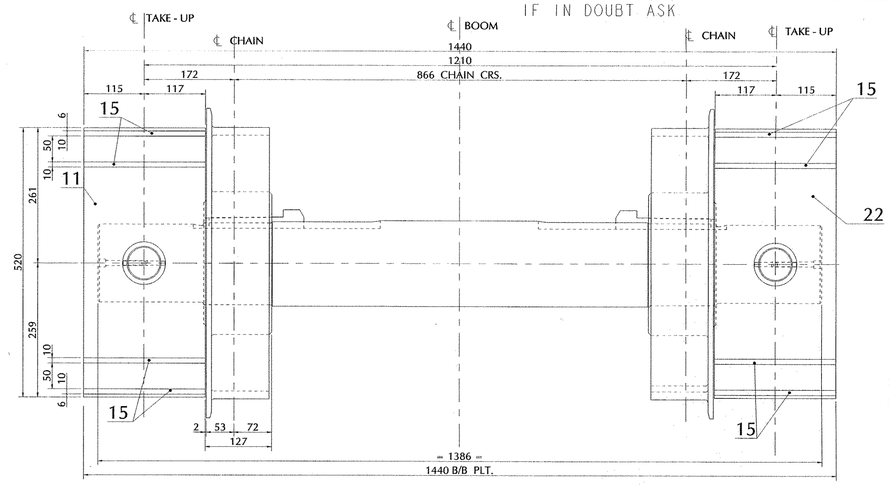

SECTION : C - C

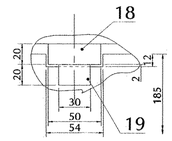

DETAIL : B

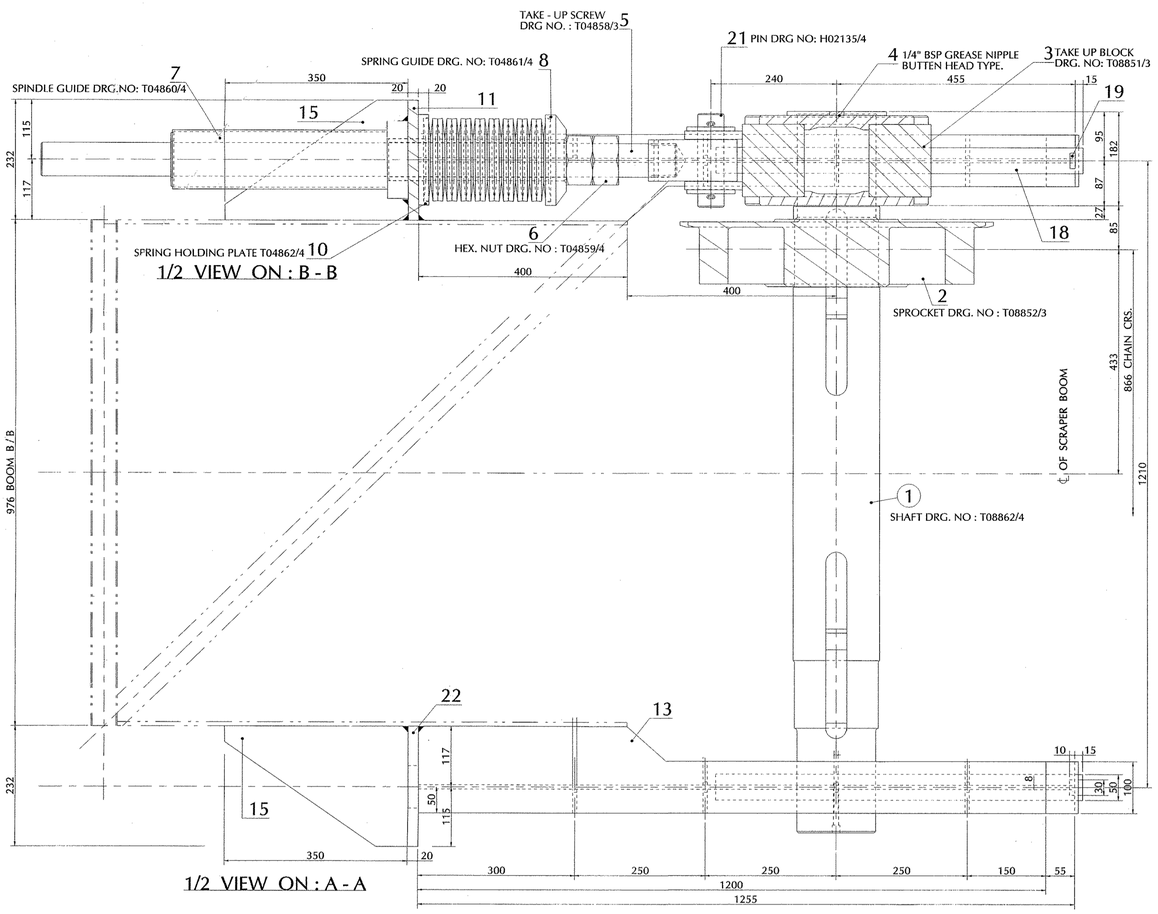

1/2 VIEW ON : B - B

1/2 VIEW ON : A - A

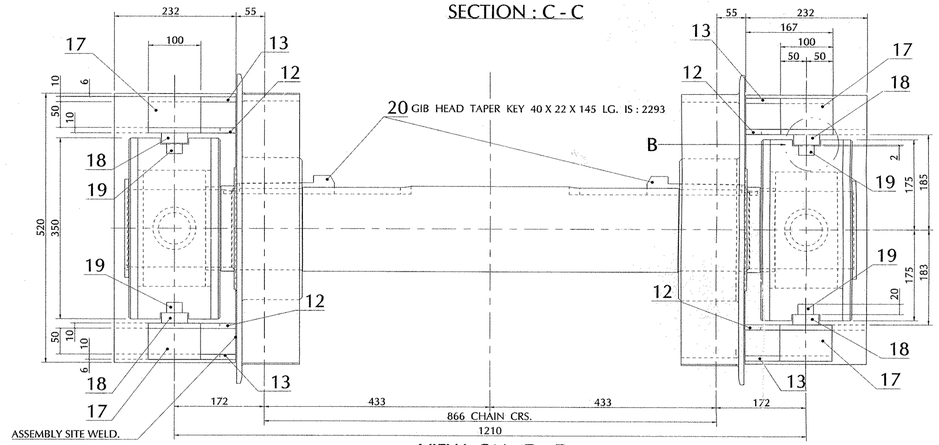

VIEW ON : D - D

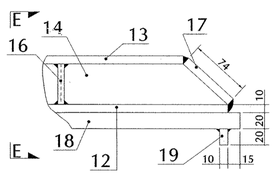

DETAIL : A

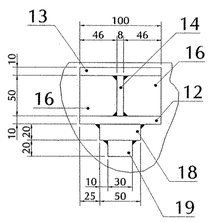

VIEW ON : E - E

								DRAWN	MEHUL DAVE	13/8/2012	TAKE - UP UNIT FOR AUXILLIARY BOOM	MAIN GR. NO 19
								CHECKED				ELECON
								APPROVED SEC.				
								MECH.				
								STRU.				
								ELE.				
ELE	STRU	MECH	SEC	DATE	NAME	ISSUE	AMENDMENTS	SCALE :		A1		SUB GR. NO 011

THIS DRAWING IS THE PROPERTY OF ELECON ENGINEERING CO. LTD. VALLABH VIDYANAGAR GUJARAT. LOANED TO THE RECIPIENT WHO AGREES THAT IT SHALL NOT BE GIVEN OUT COPIED OR DUPLICATED FOR THE USE OF ANOTHER BUT USE ONLY BY THE RECIPIENT FOR THE PURPOSE OF MAINTAINING THE EQUIPMENT TO WHICH IT REFERS.

ORDER NO. | MACHINE NO. | DRAWING NO. T09944/1M | ISSUE

USER SIZE 820x570

ELECON EPC
ELECON EPC PROJECTS LIMITED

TAKE-UP UNIT ASSEMBLY (AUXILIARY BOOM)

Group No. : 19/011 Drg.No. : T09944/1

Sr.No.	Description	Qty.	Part No.
1	Shaft	1	T08862/4
2	Sprocket	2	T08852/3
3	Take-up Block	2	T08851/3
3.1	MS Profile Plate	1	T08851/3
3.2	Deep Groove Single Row Ball Bearing	2	T08851/3
3.3	Distance Ring	1	T02363/4
3.4	Distance Ring	1	T02364/4
3.5	Distance Ring	1	T08854/4
3.6	Bearing Cover	1	H01232/3
3.7	Bearing Cover	1	T02383/3
3.8	MS Plate	2	T08851/3
3.9	Hex. Socket Head Screw M10 x 30 Lg.	12	IS:2269
3.10	Spring Washer B10	12	IS:3063
3.11	End Cover	1	T05398/4
3.12	Hex. Screw M8 x 20 Lg.	3	IS:1363 S4.6
3.13	Spring Washer B8	3	IS:3063
4	Grease Nipple Button Head 1/4" BSP	2	BS:1486
5	Take-up Screw	2	T04858/3
6	Hex. Nut	4	T04859/4
7	Guide for Spindle	2	T04860/4
8	Spring Guide	2	T04861/4
9	Disc Spring	36	DIN:2093
10	Spring Guide	2	T04862/4

ELECON EPC PROJECTS LIMITED

Group No. : 19/011 Drg.No. : T09944/1

Sr.No.	Description	Qty.	Part No.
11 to 19	Structural Plate	-	T09944/1
20	Gib Head Key	2	IS:2293
21	Pin Assembly for Take-up Screw	2	H02135/4
21.1	Pin 50 Dia. x 181 Lg.	1	H02135/4
21.2	Punched Washer A52	2	IS:2016
21.3	Split Pin 10 Dia. x 70 Lg.	2	IS:549
22	MS Plate	1	T09943/1

DRG NO. T10290/1 ISSUE

DO NOT SCALE

IF IN DOUBT ASK

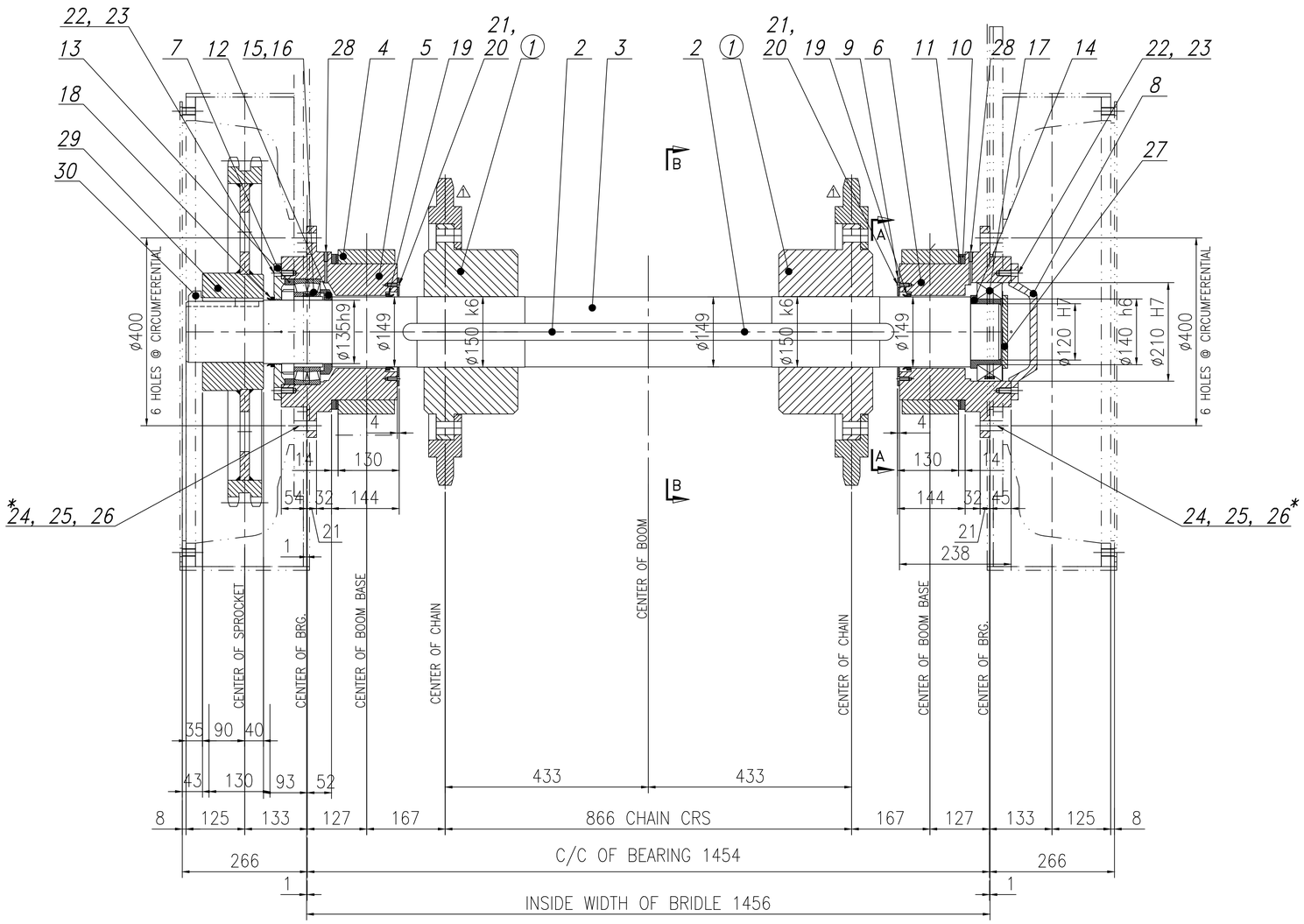

ELEVATION

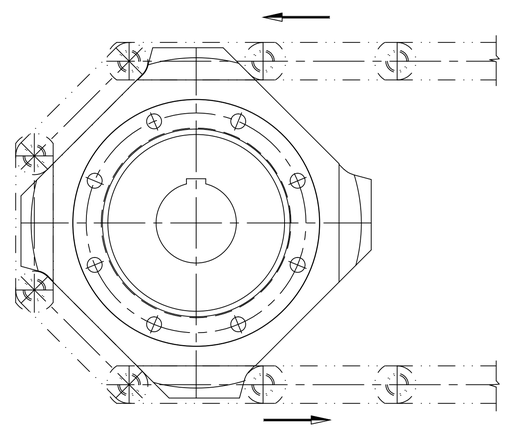

VIEW AT 'B-B'

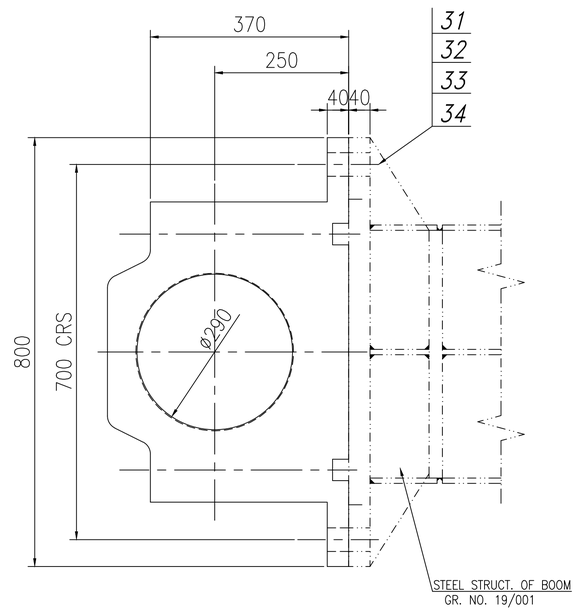

VIEW AT 'A-A'

NO.	DRG. NO.	DESCRIPTION	NO.	DRG. NO.	DESCRIPTION
18	--	RUBBER SEAL RING "V" TYPE : 130 S			
17	--	SRB 23028 C			
16	--	ADAPTOR SLEEVE H 3030	34	--	PLAIN WASHER A45, IS:2016
15	--	SRB 23030 CCK	33	--	HEX LOCK NUT M42, IS:1364.
14	R-4C-19013	BUSH	32	--	HEX NUT M42, IS:9364
13	C08640/4	DISTANCE RING	31	--	HEX FITTED BOLT M42 x 145, IS:3640
12	C08606/4	DISTANCE RING	30	--	GIB HEAD KEY IS:2293, 32 x 18 x 100 lg.
11	C08639/4	DISTANCE RING	29	C08775/3	SPROCKET (TEETH:60, PITCH : 38.1, PCD:727.99)
10	R-4C-11588	DISTANCE RING	28	--	GREASE NIPPLE 1/8" BSP
09	C08605/4	END COVER	27	R-4C-19014	SHAFT END PROTECTION
08	C08638/3	BEARING COVER	26	--	HSFG PLAIN WASHER IS:6649 M20-A*
07	C08637/3	BEARING COVER	25	--	HSFG NUT IS:3757 M20*
06	C08636/2	BEARING HOUSING	24	--	HSFG BOLT IS:3757 M20 x 80 lg*
05	C08635/2	BEARING HOUSING	23	--	SPRING WASHER IS:3063 B12
04	T00512/3	SUPPORT FOR BEARING HOUSING	22	--	HEX SCREW IS:1363 M12 x 40 lg.
03	R.2C.32362	DRIVE SHAFT	21	--	SPRING WASHER IS:3063 B8
02	--	GIB HEAD KEY 36 x 20 x 220 lg.	20	--	HEX SCREW IS:1363 M8 x 20 lg.
01	E07888/1	ASSLY. OF SPROCKET	19	--	RUBBER SEAL RING "V" TYPE : 150 S

*** NOTE FOR HSFG CONNECTION**

THE FRICTION SURFACES OF THE HSFG CONNECTIONS MUST BE CLEANED AND ROUGHENED BEFORE ASSEMBLY BY MEANS OF BLASTING WITH STEEL SHOT, QUARTZ SAND, RUST FILMS MUST BE REMOVED WITH A SOFT BRUSH. THE PREPARED SURFACES MUST BE FREE FROM RUST, DUST, OIL AND PAINT AT THE TIME OF ASSEMBLY.

ASSEMBLY: WASHERS MUST BE USED UNDER EACH BOLT HEAD AND NUT.

FRICTION GRIP BOLTED JOINT SHALL BE SEALED WITH SILICON COMPOUND TO PREVENT RUSTING.

TIGHTENING TORQUE WITH TORQUE SPANNER

BOLT SIZE	TORQUE - KG.M
1) M20	45

ELE.	STRU	MECH	SEC	NAME	DATE	ISSUE	AMENDMENTS
		RPJ	RPJ	RKP	5/2/13	1	IN ELEVATION SPROCKET RIM POSITION CORRECTED.

DRAWN	R. K. Patel	05/10/12
CHECK	R. R. Panchal	05/10/12
APPROVED SEC.	R. P. Joria	05/10/12
MEC		
STR.		
ELE.		

SCALE :

NOTE :- DRIVE SHAFT WITH ALL COMPONENT SHOULD BE ASSEMBLED IN SHOP PRIOR TO DESPATCH.

DRIVE SHAFT ASSLY. TO BRIDLE

THIS DRAWING IS THE PROPERTY OF ELECON ENGINEERING CO. LTD. VALLABH VIDYANAGAR GUJARAT. LOANED TO THE RECIPIENT WHO AGREES THAT IT SHALL NOT BE GIVEN OUT COPIED OR DUPLICATED FOR THE USE OF ANOTHER BUT USED ONLY BY THE RECIPIENT FOR THE PURPOSE OF MAINTAINING THE EQUIPMENT TO WHICH IT REFERS.

MAIN GR. NO. 19

ELECON

SUB GR. NO. 013

ORDER NO. CO/2281

M/C NO. HM/573 HM/574

DRG. NO. T10290/1 ISSUE 1

T07492/1

T08806/1

USER SIZE 820x570

ELECON EPC
ELECON EPC PROJECTS LIMITED

DRIVE SHAFT ASSEMBLY TO BRIDLE

Group No. : 19/013 Drg.No. : T10290/1

Sr.No.	Description	Qty.	Part No.
1	Drive Sprocket Assembly	2	E07888/1
1.1	Sprocket Rim	1	E07891/1
1.2	Hub	1	E07889/2
1.3	Spring Dowel Sleeve 28Dia x 55mm	8	E07888/1
1.4	Hex. Screw M16 x 110 Lg.	8	IS:1364 S8.8
1.5	Plain Washer M16	16	IS:2016
1.6	Hex. Nut M16	8	IS:1364 S8.0
1.7	Hex. Lock Nut M16	8	IS:1364 S8.0
2	Gib Head Key	2	IS:2293
3	Shaft	1	R.2C.32362
4	Bearing Housing Support	2	T00512/3
4.1	Profile Plate	1	T00512/3
4.2	Profile Plate	1	T00512/3
4.3	Rec. Head Bolt with Nut	4	T00520/4
4.3.1	Rec. Head Bolt	1	T00520/4
4.3.2	Hex. Nut M22	1	IS:1364 S8.8
4.3.3	Hex. Lock Nut M22	1	IS:1364 S8.8
4.4	Spring Washer B22	4	IS:3063
4.5	Spring Dowel 12 Dia. x 60mm	2	IS:5988
5	Bearing Housing	1	C08635/2
6	Bearing Housing	1	C08636/2
7	Housing Cover	1	C08637/3
8	Housing Cover	1	C08638/3

ELECON EPC
ELECON EPC PROJECTS LIMITED

Group No. : 19/013 Drg.No. : T10290/1

Sr.No.	Description	Qty.	Part No.
9	Bearing Cover	2	C08605/4
10	Distance Ring	2	R.4C.11588
11	Distance Ring	2	C08639/4
12	Distance Ring	1	C08606/4
13	Distance Ring	1	C08640/4
14	Collar Bush	1	R.4C.19013
15	Sph. Roller Bearing	1	T10290/1
16	Bearing Adaptor Sleeve	1	T10290/1
17	Sph. Roller Bearing	1	T10290/1
18	Rubber Seal Ring "V" type	1	T09485/4
19	Rubber Seal Ring "V" type	2	T09485/4
20	Hex. Screw M8 x 20 Lg.	8	IS:1363 S4.6
21	Spring Washer B8	8	IS:3063
22	Hex. Screw M12 x 40 Lg.	12	IS:1363 S4.6
23	Spring Washer B12	12	IS:3063
24	HSFG Bolt M20 x 80 Lg.	12	IS:3757 S10.9
25	HSFG Hex. Nut M20	12	IS:6623 S10.0
26	HSFG Plain Washer A M20	24	IS:6649
27	Shaft End Protection	1	R.4C.19014
27.1	Cover	1	R.4C.19016
27.2	Lock Plate	1	R.4C.19015
27.3	Hex. Screw M24 x 70 Lg.	1	R.4C.19014
27.4	Cylindrical Pin M6 x 50	1	R.4C.19014

ELECON EPC
ELECON EPC PROJECTS LIMITED

Group No. : 19/013 Drg.No. : T10290/1

Sr.No.	Description	Qty.	Part No.
28	Grease Nipple 1/8" BSP	2	T10290/1
29	Chain Sprocket Assembly Teeth : 60, Pitch : 38.1mm Sprocket P.C.D. : 727.9	1	C08775/3
30	Gib Head Key	1	IS:2293
31	Fitted Hex. Bolt & Nut M42 x 145 Lg.	4	IS:3640 S8.8
32	Hex. Nut M42	4	IS:1364 S8.0
33	Hex. Lock Nut M42	4	IS:1364 S8.0
34	Punched Washer A45	4	IS:2016

DRG.NO. C 8684/2 MN ISSUE

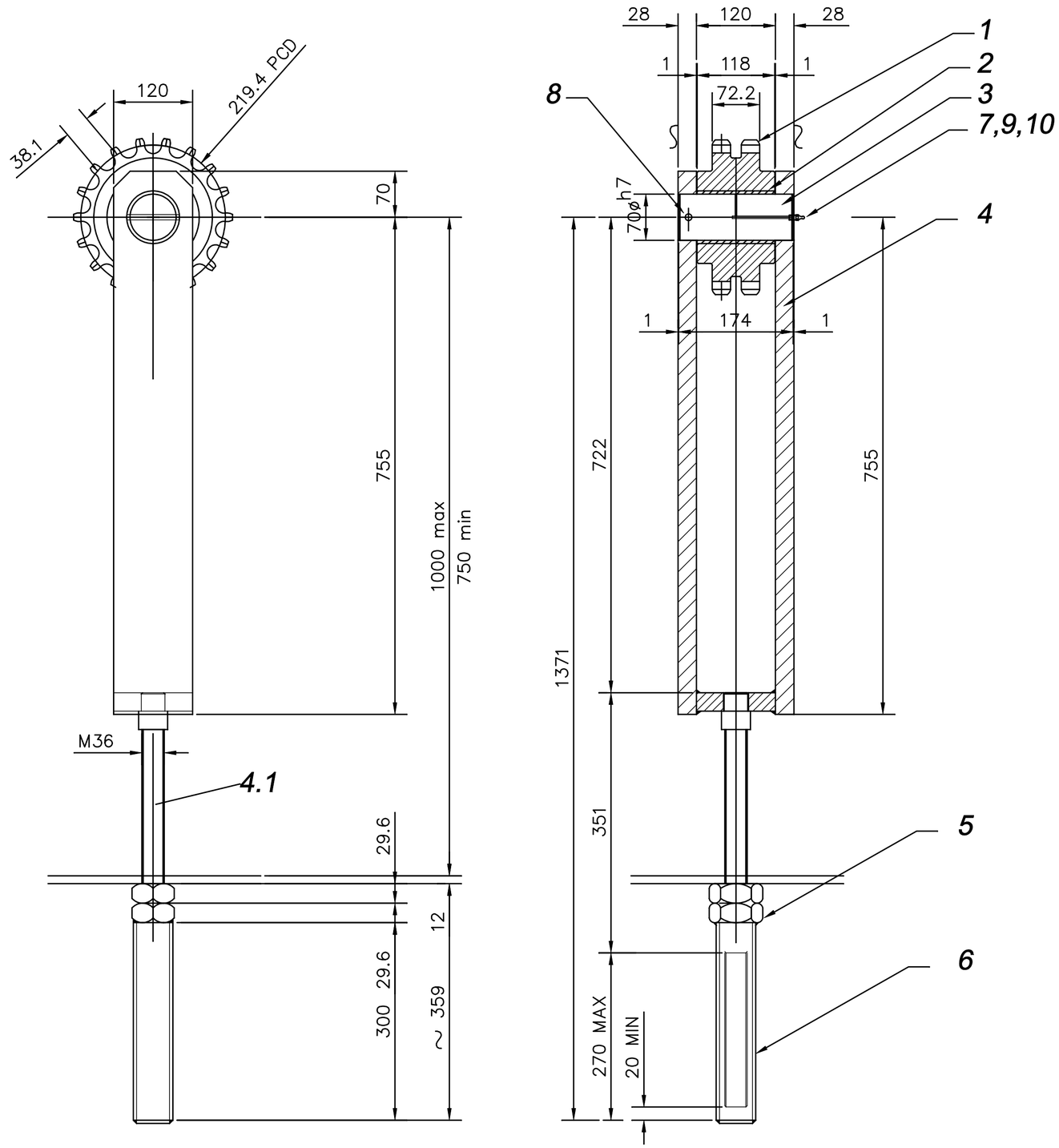

1	SPROCKET:–	PART NO. C08774/3 TEETH 18, PITCH : 38.1 PCD: 219.41 MM
2	BUSH :–	PART NO. C08685/4
3	PIN :–	DRG NO. C08686/4 70 DIA X 174 LG
4	BRACKET :–	PART NO. C08696/4
5	HEX NUT M36 IS:1363	
6	SPINDLE :–	PART NO. C08687/4
7	M.S.PIPE :–	CLASS –B
8	SPRING DOWEL PIN M10X120 IS:5988	
9	GREASE NIPPLE 1/8" BSP IS :1486	
10	SOCKET 1/8" BSP PART NO.15–5–1018	

ELE.	STRU.	MECH.	SEC.	DATE.	ZONE.	ISSUE.	AMENDMENTS

DRAWN	H.N.Masawala	9/10/01
CHECKED	R.P.Jaria	
APPROVED SEC.		
APPROVED MECH.		
APPROVED STRU.		
APPROVED ELE.		
SCALE :–		

TAKE- UP DEVICE FOR CHAIN DRIVE OF BRIDLE.

THIS DRAWING IS THE PROPERTY OF ELECON ENGINEERING CO. LTD. VALLABH VIDYANAGAR GUJARAT. LOANED TO THE RECIPIENT WHO AGREES THAT IT SHALL NOT BE GIVEN OUT COPIED OR DUPLICATED FOR THE USE OF ANOTHER BUT USE ONLY BY THE RECIPIENT FOR THE PURPOSE OF MAINTAINING THE EQUIPMENT TO WHICH IT REFERS.

MAIN GR. NO. 19

SUB GR. NO. 014

ELECON

ORDER NO. | M/C NO

DRG NO. C 8684/2 MN | ISSUE.

USER SIZE 570x396

ELECON EPC PROJECTS LIMITED

CHAIN TENSIONING UNIT AT BRIDLE

Group No. : 19/014 Drg.No. : C08684/2

Sr.No.	Description	Qty.	Part No.
1	Sprocket 38.1mm, 18 Teeth	1	C08774/3
2	Bush 80 O/D x 70 I/D x 118 Lg.	1	C08685/4
3	Pin 70 Dia. x 174 Lg.	1	C08686/4
4	Bracket (Spindle)	1	C08696/4
5	Hex. Nut M36	1	IS:1363 S4.6
6	Cover	1	C08687/4
7	MS Pipe ERW 10 Dia. x 1.5 Thk.	1	IS:9295
8	Spring Dowel 10 Dia. x 120mm	1	IS:5988
9	Grease Nipple Button Head 1/8" BSP	1	BS:1486
10	Socket 1/8"	1	C08684/2

DO NOT SCALE

IF IN DOUBT ASK

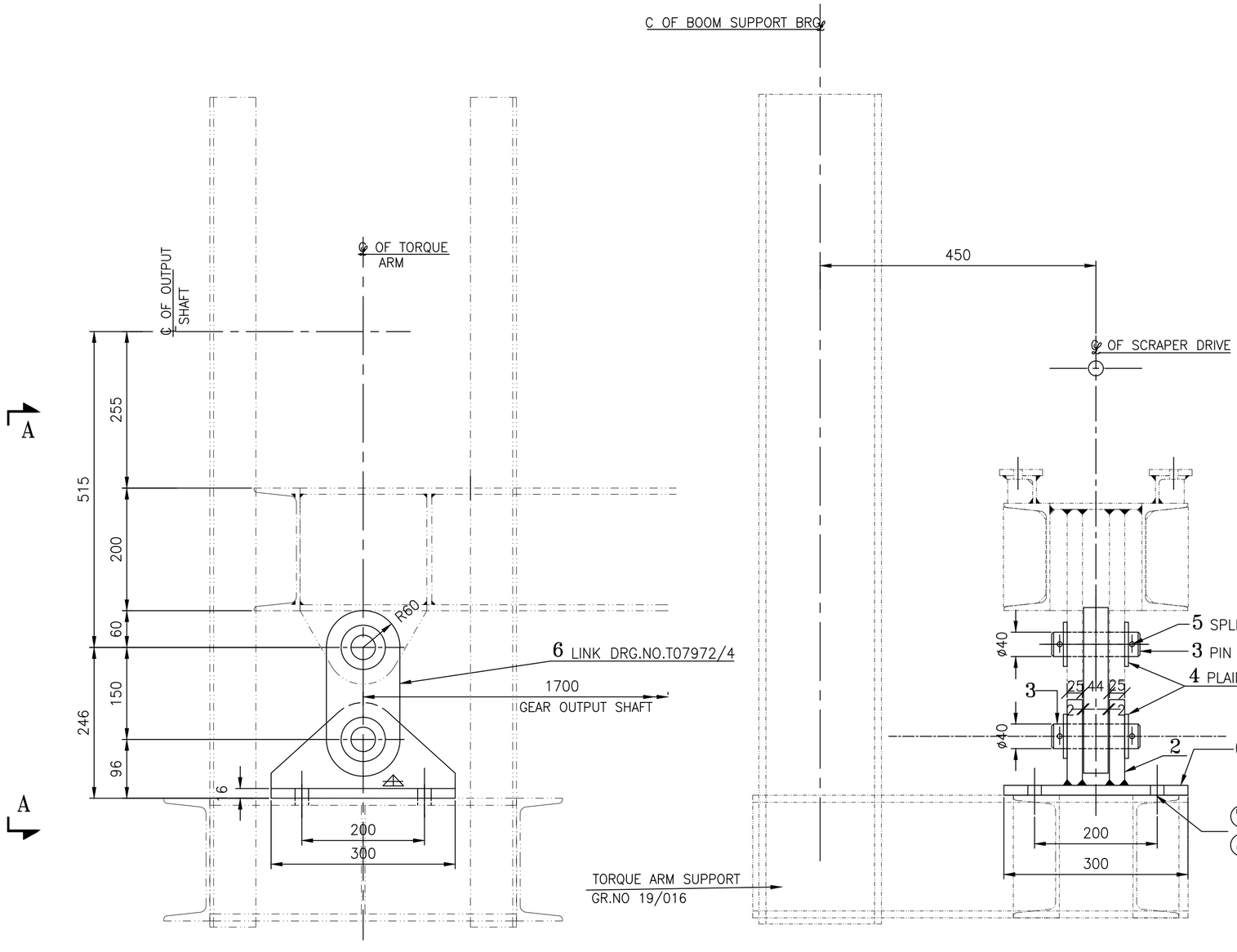

ELEVATION

VIEW ON A-A

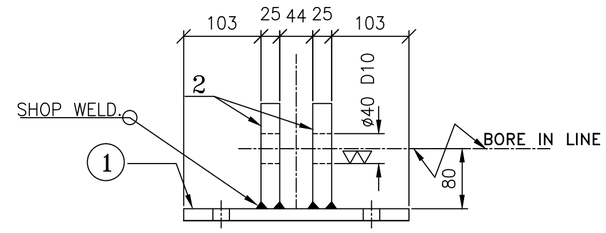

WELD. & BORE DETAIL

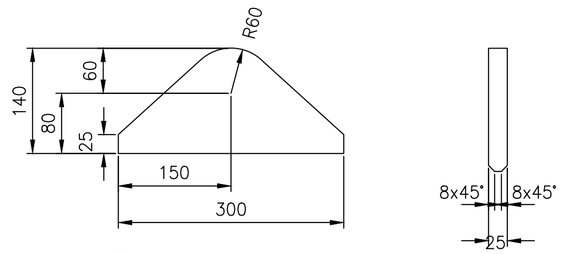

2 PLT 25 THKx164x300 LG.

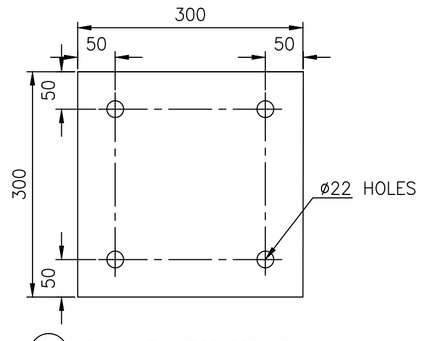

1 PLT 16THKx300x300 LG.

NOTE :-

* ALL DIMENSIONS ARE IN M.M
* SITE WELD IS SHOWN AS THUS

TOLERANCE	
	D10
ø40	+0.180 +0.080

ELE.	STRU	MECH	SEC	NAME	DATE	ISSUE	AMENDMENTS

DRAWN		S.A.Patel	09/10/12
CHECK		R.K.Patel	
APPROVED	SEC.	R.R.Panchal	
	MEC	R.P.Jaria	
	STR.		
	ELE.		

SCALE :

TORQUE ARM FOR AUX.SCRAPER DRIVE UNIT

THIS DRAWING IS THE PROPERTY OF ELECON ENGINEERING CO. LTD. VALLABH VIDYANAGAR GUJARAT. LOANED TO THE RECIPIENT WHO AGREES THAT IT SHALL NOT BE GIVEN OUT COPIED OR DUPLICATED FOR THE USE OF ANOTHER BUT USED ONLY BY THE RECIPIENT FOR THE PURPOSE OF MAINTAINING THE EQUIPMENT TO WHICH IT REFERS.

MAIN GR. NO. 19

SUB GR. NO. 015

ELECON

ORDER NO. CO/2281

M/C NO. HM/573 HM/574

DRG. NO. T10297/2

ISSUE

T07950/2 T07971/2 T10297/2 T09023/2

USER SIZE 570x395

ELECON EPC PROJECTS LIMITED

TORQUE ARM FOR SCRAPER DRIVE (AUXILIARY BOOM)

Group No. : 19/015 Drg.No. : T10297/2

Sr.No.	Description	Qty.	Part No.
1	MS Plate	1	T10297/2
2	MS Plate	2	T10297/2
3	Pin 40 Dia x 144 Lg.	2	T07973/4
4	Punched Washer A45	4	IS:2016
5	Split Pin 8 Dia x 56 Lg.	4	IS:549
6	Link Plate	1	T07972/4
7	Hex. Bolt & Nut M20 x 60 Lg.	4	IS:1363 S4.6
8	Spring Washer B20	4	IS:3063

DO NOT SCALE

IF IN DOUBT ASK

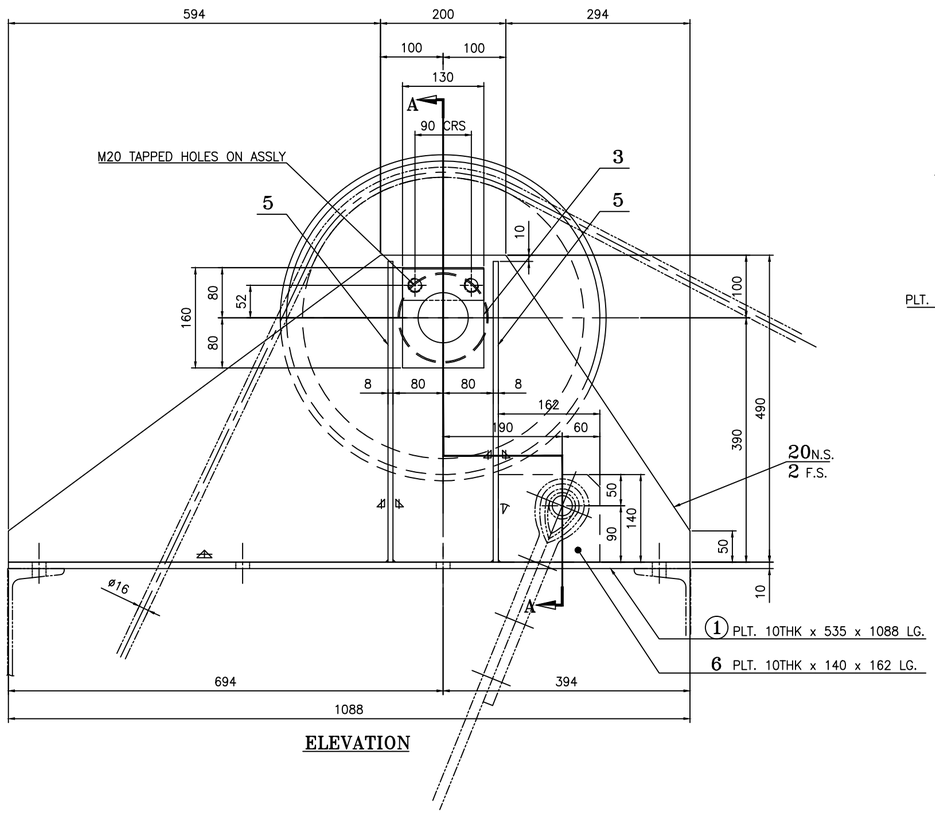

ELEVATION

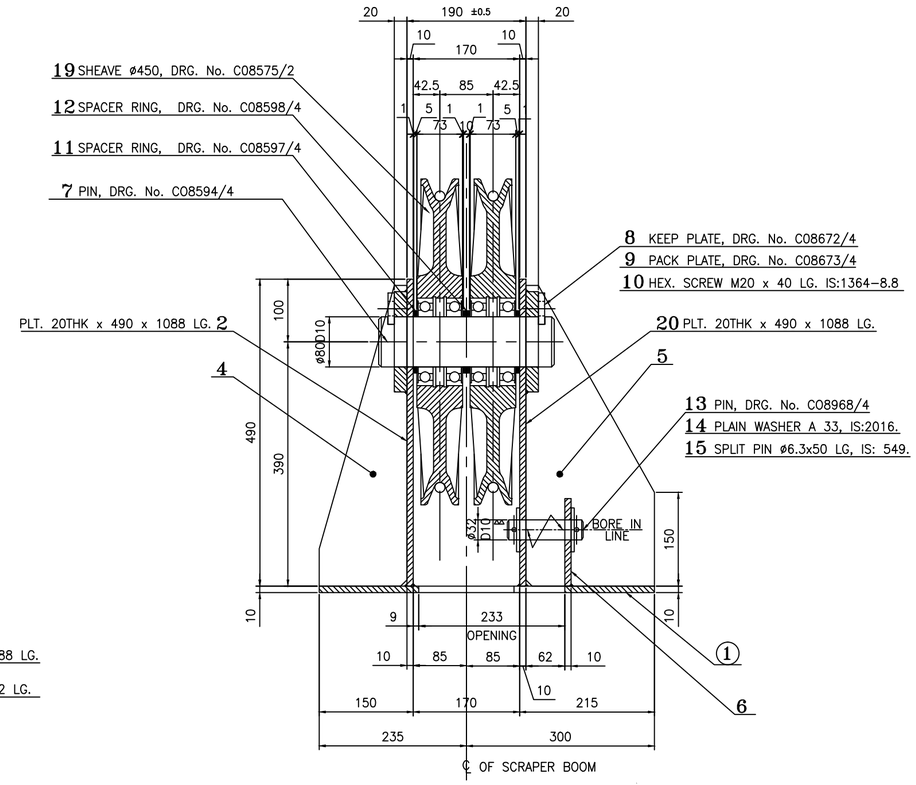

SECTION 'A-A'

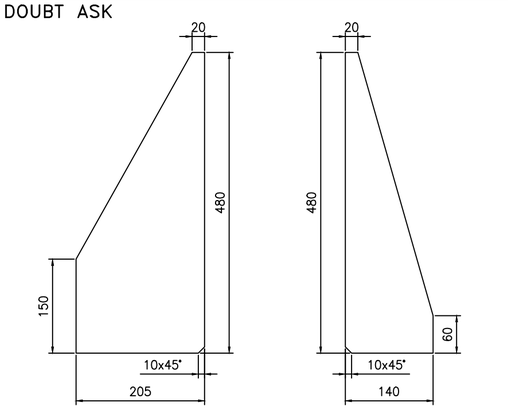

5 PLT. 8THK x 205 x 480 LG.

4 PLT. 8THK x 140 x 480 LG.

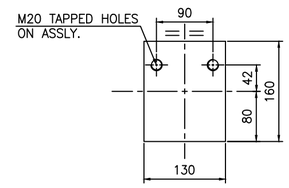

3 PLT. 20THK x 130 x 160 LG.
THIS PLATE FIRST WELDED TO ITEM No. 2 & 20
THEN M20 TAPPING HOLES AND BORE TO BE DONE.

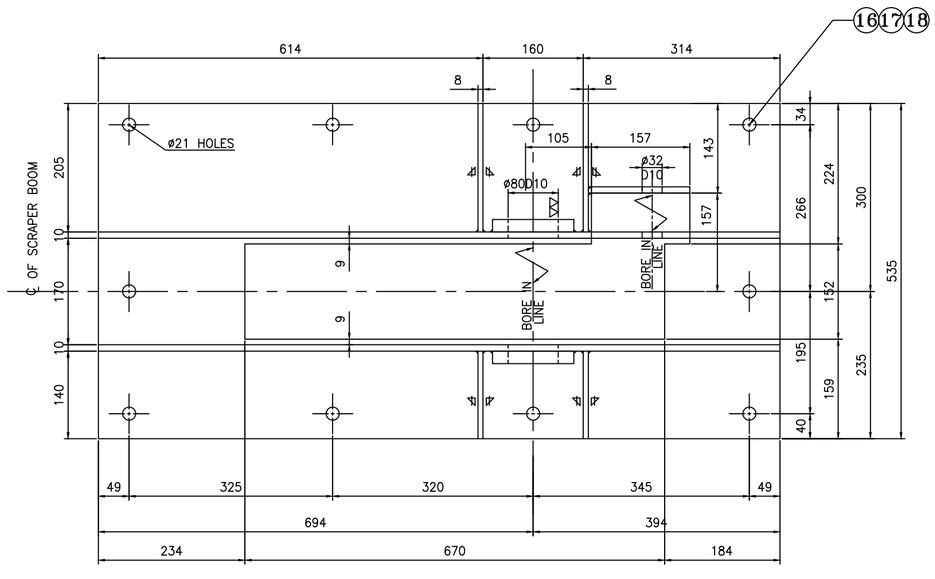

PLAN

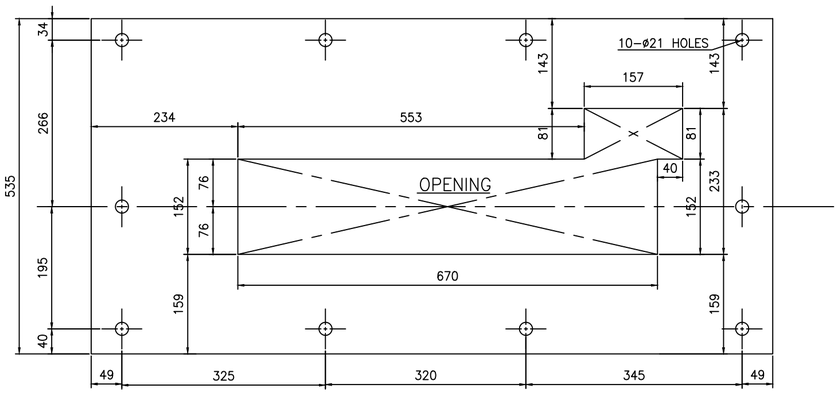

1 PLT. 10THK x 535 x 1088 LG.

16 HEX BOLT M20x60 LG, IS:1364 S8.8

17 HEX NUT M20, IS:1364 S8

18 TAPER WASHER 22, IS:5372

– ALL WELDS ARE 4 mm THK FILLET U.O.NOTED.

TOLERANCE	
ø80 D10	+0.220 +0.100
ø32 D10	+0.180 +0.080

ELE.	STRU	MECH	SEC	NAME	DATE	ISSUE	AMENDMENTS

DRAWN	H.T.Shimpi	30.10.12
CHECK	R.K.Patel	
APPROVED SEC.	R.R.Panchal	
APPROVED MEC	R.P.Jaria	
APPROVED STR.		
APPROVED ELE.		
SCALE :		

SHEAVE SUPPORTING BRACKET FOR MAIN BOOM.

THIS DRAWING IS THE PROPERTY OF ELECON ENGINEERING CO. LTD. VALLABH VIDYANAGAR GUJARAT. LOANED TO THE RECIPIENT WHO AGREES THAT IT SHALL NOT BE GIVEN OUT COPIED OR DUPLICATED FOR THE USE OF ANOTHER BUT USED ONLY BY THE RECIPIENT FOR THE PURPOSE OF MAINTAINING THE EQUIPMENT TO WHICH IT REFERS.

MAIN GR. NO.	22
SUB GR. NO.	002
ORDER NO.	CO/2281
M/C NO.	HM/573 HM/574
DRG. NO.	T10334/1
ISSUE	

ELECON

USER SIZE 820x570

T0940/1

ELECON EPC
ELECON EPC PROJECTS LIMITED

SHEAVE SUPPORT BRACKET FOR MAIN BOOM

Group No. : 22/002 Drg.No. : T10334/1

Sr.No.	Description	Qty.	Part No.
1 to 6	Structural Plate	-	T10334/1
7	Pin 80 Dia. x 280 Lg.	1	C08594/4
8	Keep Plate	2	C08672/4
9	Pack Plate	2	C08673/4
10	Hex. Screw M20 x 40 Lg.	4	IS:1363 S4.6
11	Spacer Ring	2	C08597/4
12	Spacer Ring	1	C08598/4
13	Pin 32 Dia. x 121 Lg.	1	C08968/4
14	Punched Washer A33	2	IS:2016
15	Split Pin 6.3 Dia. x 50 Lg.	2	IS:549
16	Hex. Screw M20 x 60 Lg.	10	IS:1364 S8.8
17	Hex. Nut M20	10	IS:1364 S8.0
18	Taper Washer M22	10	IS:5372
19	450 Dia. Sheave Pulley Assembly	2	C08575/2
19.1	450 Dia. Sheave Pulley	1	C08576/2
19.2	Internal Circlip	2	IS:3075
19.3	Deep Groove Ball Bearing	2	C08575/2
20	MS Plate	1	T10334/1

DO NOT SCALE

IF IN DOUBT ASK

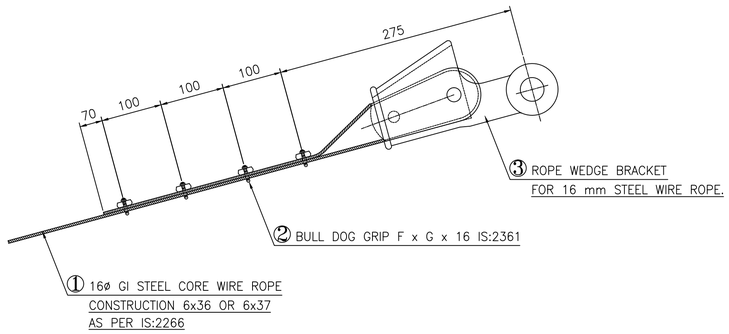

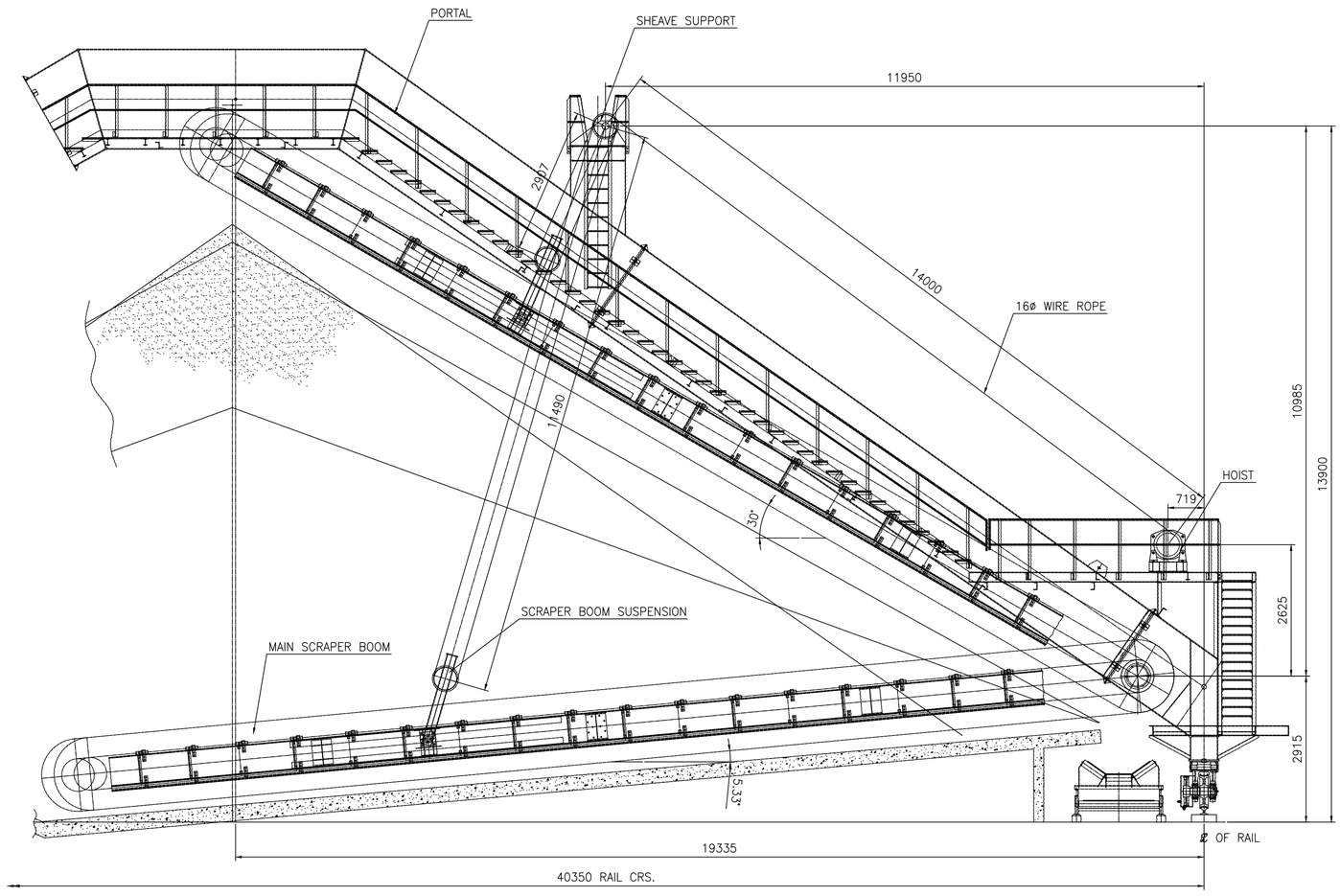

ELEVATION

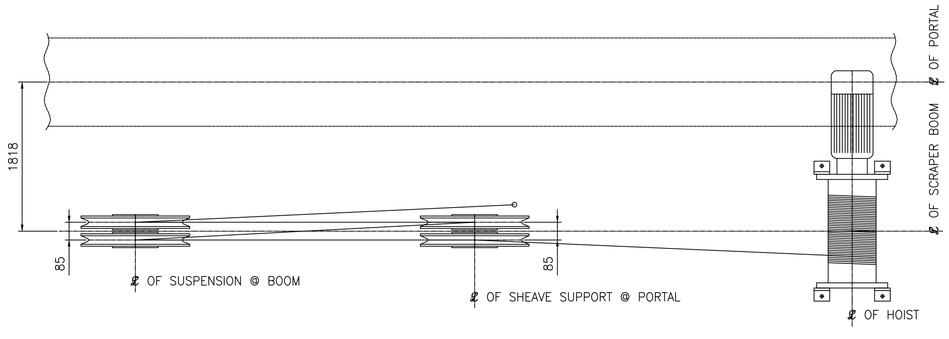

KEY PLAN
SHEAVE ARRANGEMENT

ROPE LENGTH FOR BOOM SUSPENSION

TOTAL LIFT = 4x(11490−2907) = 34332mm

TOTAL ROPE ON SHEAVE = 2700mm

TOTAL ROPE = (11490x4)+14000+4340 (3 NOS. DEAD TURN)+2700+1500 EXTRA

TOTAL ROPE = 68500mm

ELE.	STRU	MECH	SEC	NAME	DATE	ISSUE	AMENDMENTS

DRAWN	R. K. Patel	20/09/12
CHECK	R. R. Panchal	20/09/12
APPROVED SEC.		
APPROVED MEC	R. P. Jaria	20/09/12
APPROVED STR.		
APPROVED ELE.		

SCALE : 1:60

ARRANGEMENT OF ROPE FOR MAIN SCRAPER BOOM

THIS DRAWING IS THE PROPERTY OF ELECON ENGINEERING CO. LTD. VALLABH VIDYANAGAR GUJARAT. LOANED TO THE RECIPIENT WHO AGREES THAT IT SHALL NOT BE GIVEN OUT COPIED OR DUPLICATED FOR THE USE OF ANOTHER BUT USED ONLY BY THE RECIPIENT FOR THE PURPOSE OF MAINTAINING THE EQUIPMENT TO WHICH IT REFERS.

MAIN GR. NO. 22

SUB GR. NO. 003

ELECON

ORDER NO. CO/2281

M/C NO. HM/573

DRG. NO T10171/1

ISSUE

USER SIZE 820x570

ELECON EPC PROJECTS LIMITED

ARRANGEMENT OF WIRE ROPE (MAIN BOOM)

Group No. : 22/003 Drg.No. : T10171/1

Sr.No.	Description	Qty.	Part No.
1	16Ø GI Wire Rope Steel Core 6x36 Construction As Per IS:2266 Length : 68.5 Mtr.	-	T10171/1
2	Bull Dog Grip F x G x 16	4	IS:2361
3	Rope Wedge Socket 16Ø Rope	1	T10171/1

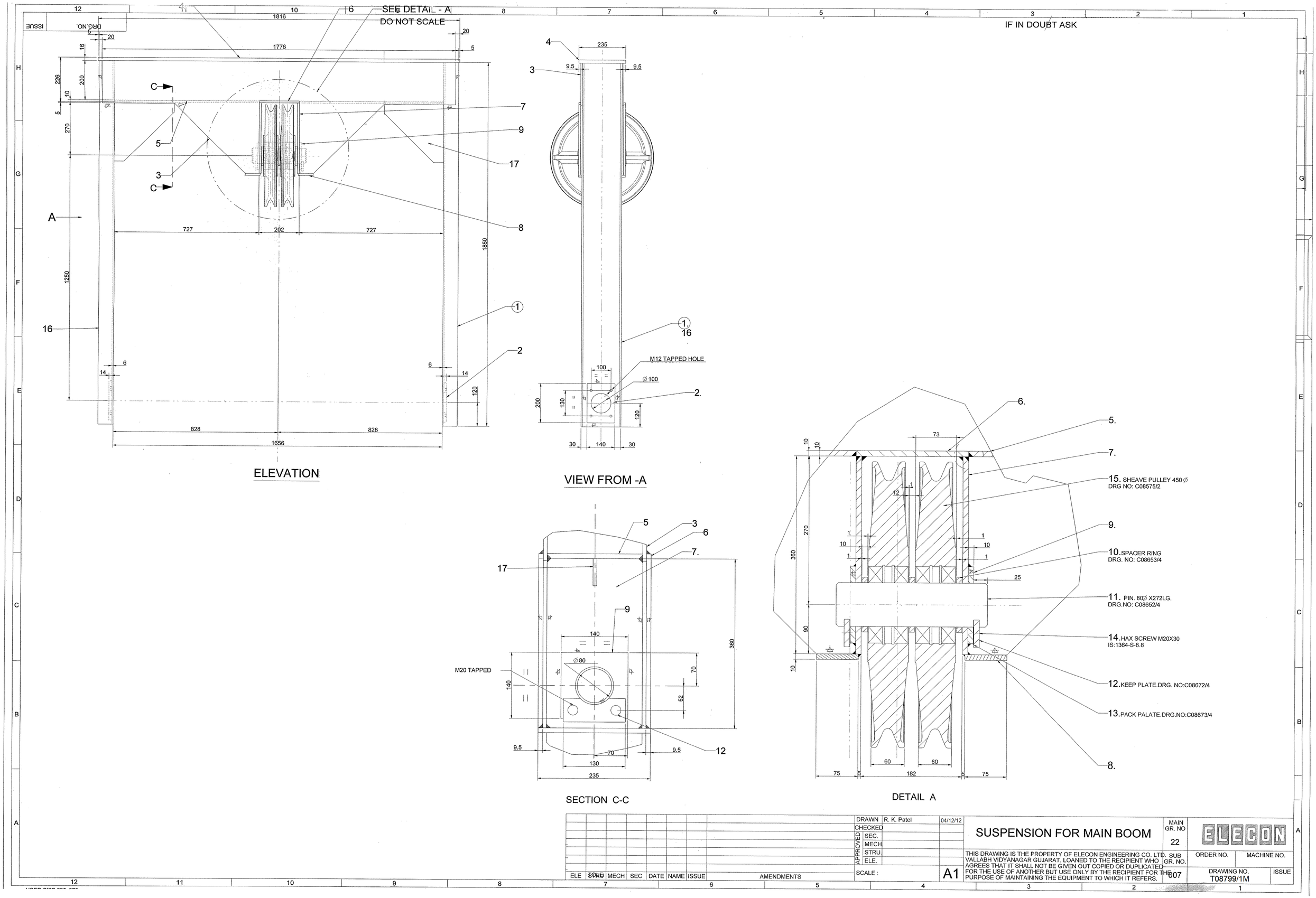

								DRAWN	R. K. Patel	04/12/12	SUSPENSION FOR MAIN BOOM	MAIN GR. NO 22	ELECON		
								CHECKED							
								APPROVED SEC.							
								MECH.							
								STRU.							
								ELE.							
ELE	STRU	MECH	SEC	DATE	NAME	ISSUE	AMENDMENTS	SCALE :		A1	THIS DRAWING IS THE PROPERTY OF ELECON ENGINEERING CO. LTD. VALLABH VIDYANAGAR GUJARAT. LOANED TO THE RECIPIENT WHO AGREES THAT IT SHALL NOT BE GIVEN OUT COPIED OR DUPLICATED FOR THE USE OF ANOTHER BUT USE ONLY BY THE RECIPIENT FOR THE PURPOSE OF MAINTAINING THE EQUIPMENT TO WHICH IT REFERS.	SUB GR. NO. 007	ORDER NO.	MACHINE NO.	
													DRAWING NO. T08799/1M	ISSUE	

ELECON EPC
ELECON EPC PROJECTS LIMITED

SUSPENSION FOR SCRAPER MAIN BOOM

Group No. : 22/007 Drg.No. : T08799/1

Sr.No.	Description	Qty.	Part No.
1 to 9	Structural Plate	-	T08799/1
10	Spacer Ring	3	C08653/4
11	Pin 80 Dia. x 272 Lg.	1	C08652/4
12	Keep Plate	2	C08672/4
13	Pack Plate	2	C08673/4
14	Hex. Screw M20 x 30 Lg.	4	IS:1364 S8.8
15	450 Dia. Sheave Pulley Assembly	2	C08575/2
15.1	450 Dia. Sheave Pulley	1	C08576/2
15.2	Internal Circlip	2	IS:3075
15.3	Deep Groove Ball Bearing	2	C08575/2
16	MS Channel 200 x 75	1	T08799/1
17	MS Plate	2	T08799/1

DO NOT SCALE

IF IN DOUBT ASK

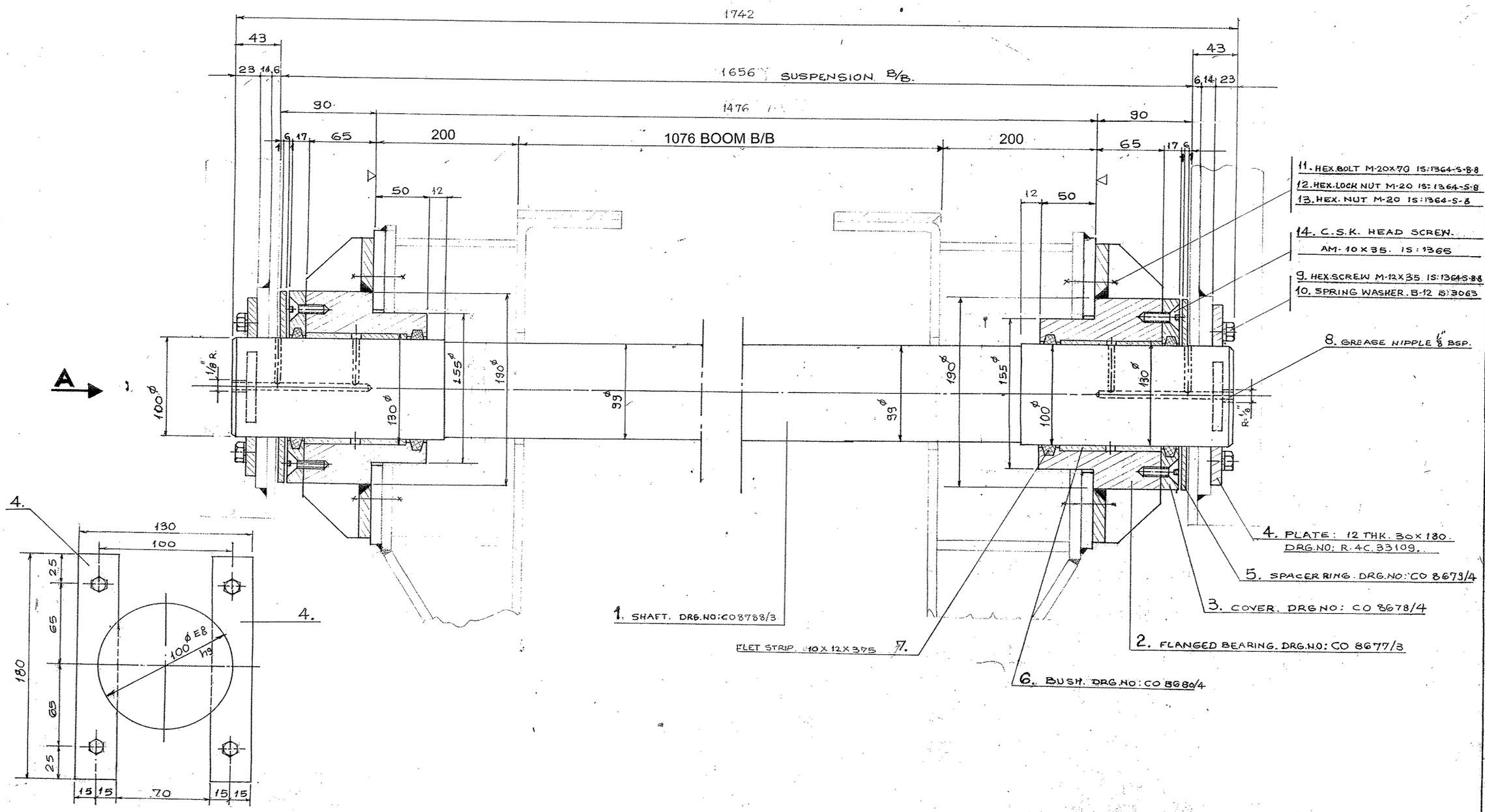

ELE.	STRU.	MECH.	SEC.	DATE	ZONE	ISSUE	AMENDMENTS

DRAWN	R. K. Patel	04/12/12
CHECKED		
APPROVED SEC.		
APPROVED MECH.		
APPROVED STRU.		
APPROVED ELE.		

SCALE:-

SUSPENSION SHAFT TO MAIN BOOM WITH FLANGE BEARING.

THIS DRAWING IS THE PROPERTY OF ELECON ENGINEERING CO. LTD. VALLABH VIDYANAGAR GUJARAT. LOANED TO THE RECIPIENT WHO AGREES THAT IT SHALL NOT BE GIVEN OUT COPIED OR DUPLICATED FOR THE USE OF ANOTHER BUT USED ONLY BY THE RECIPIENT FOR THE PURPOSE OF MAINTAINING THE EQUIPMENT TO WHICH IT REFERS.

MAIN GR. NO. 22

SUB GR. NO. 008

ELECON

ORDER NO.

M/C NO.

DRG. NO. T09720/2M

ISSUE

J J A2-2000-11-83

ELECON EPC
ELECON EPC PROJECTS LIMITED

SUSPENSION SHAFT WITH BEARING (MAIN BOOM)

Group No. : 22/008 Drg.No. : T09720/2

Sr.No.	Description	Qty.	Part No.
1	Shaft 100 Dia. x 1742 Lg.	1	C08788/3
2	Bearing Flanged	2	C08677/3
3	Cover	2	C08678/4
4	Keep Plate	4	R.4C.33109
5	Spacer Ring	2	C08679/4
6	Bush 130 O/D x 100 I/D x 97 Lg.	2	C08680/4
7	Felt Strip 10 x 12	4	T09720/2
8	Grease Nipple 1/8" BSP	2	T09720/2
9	Hex. Screw M12 x 35 Lg.	8	IS:1364 S8.8
10	Spring Washer B12	8	IS:3063
11	Hex. Bolt M20 x 70 Lg.	12	IS:1364 S8.8
12	Hex. Nut M20	12	IS:1364 S8.0
13	Hex. Lock Nut M20	12	IS:1364 S8.0
14	Countersunk Screw AM10 x 35 Lg.	8	IS:1365 S4.8

DO NOT SCALE

IF IN DOUBT ASK

DRG.NO. T10393/0 ISSUE

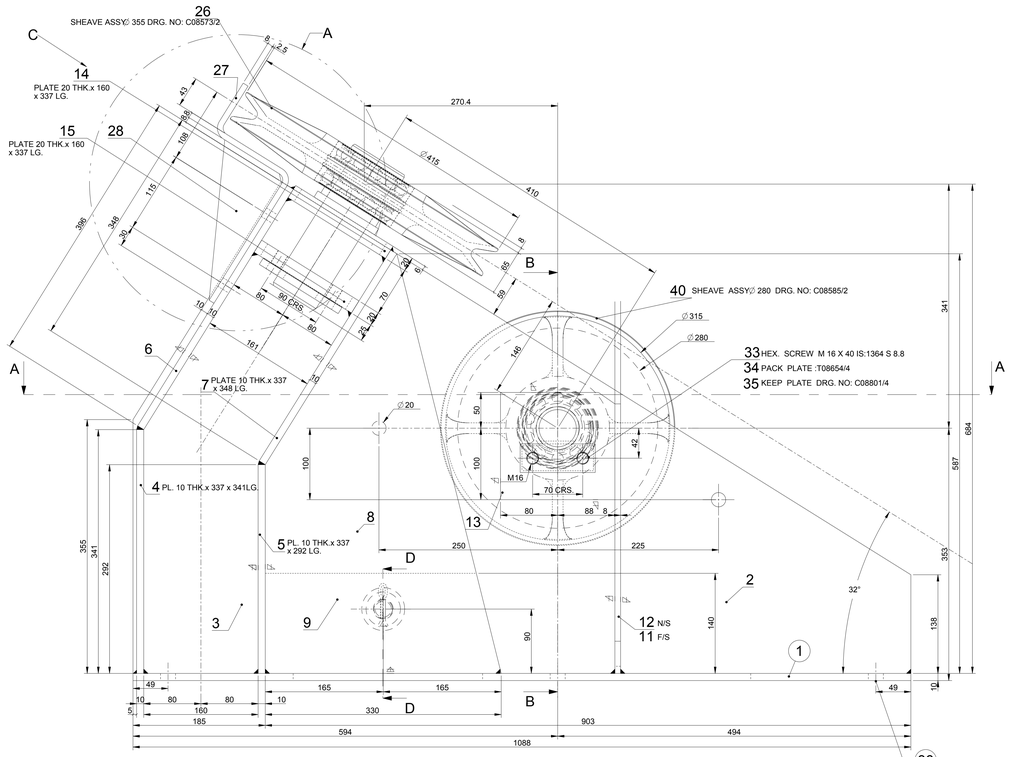

ELEVATION

36 HEX. BOLT M 20 X 60 IS:1364 S 8.8
37 HEX. NUT M 20 IS: 1364 S 8.8
38 TAPPER WASHER 22 IS : 5372
39 LOCK NUT B 20 IS:1364 S 8.8

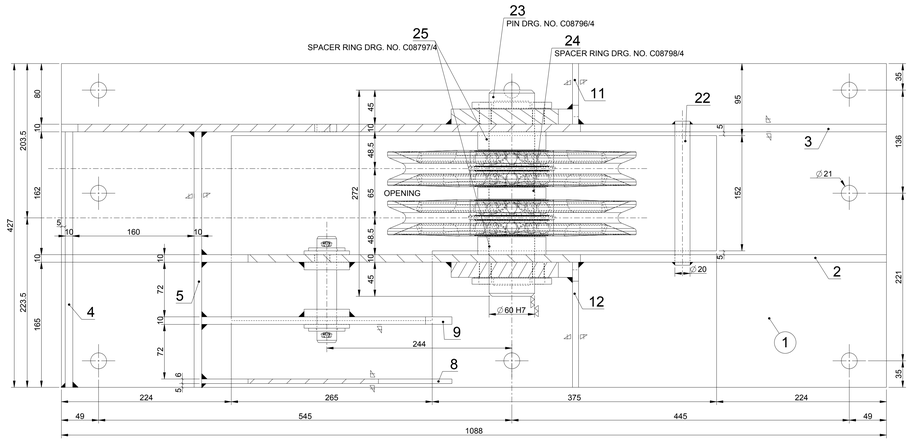

SECTION :- A A

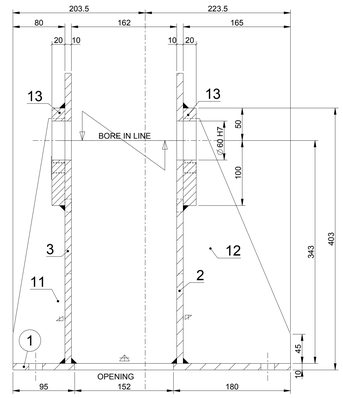

SECTION :- B B

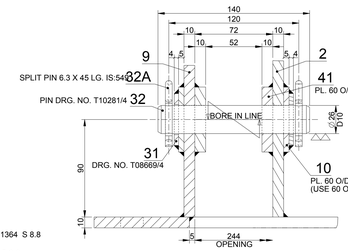

SECTION :- D D

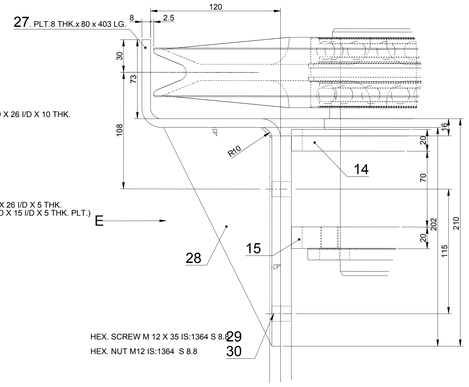

DETAIL :- A

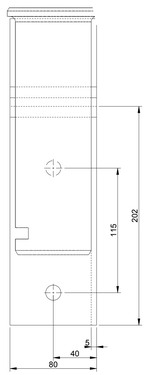

VIEW ON : E

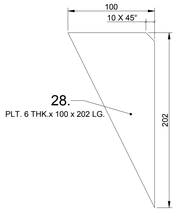

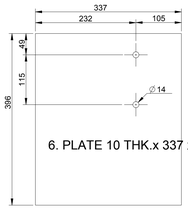

6. PLATE 10 THK.x 337 x 396 LG.

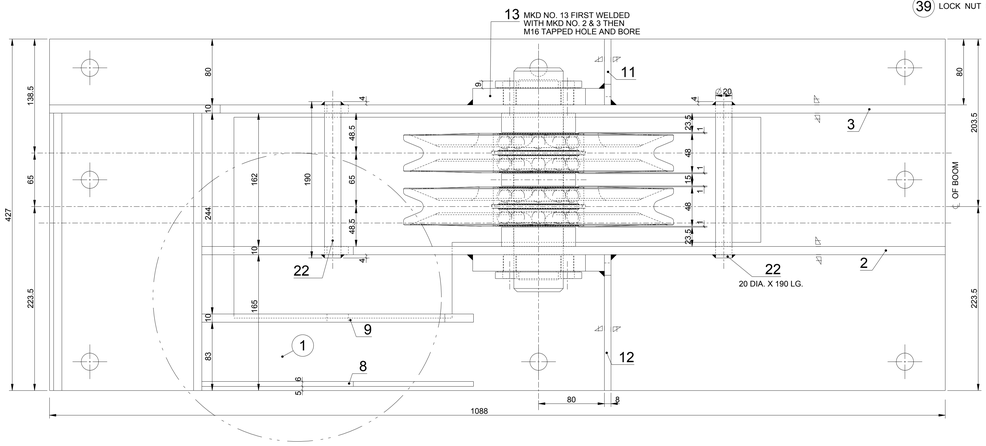

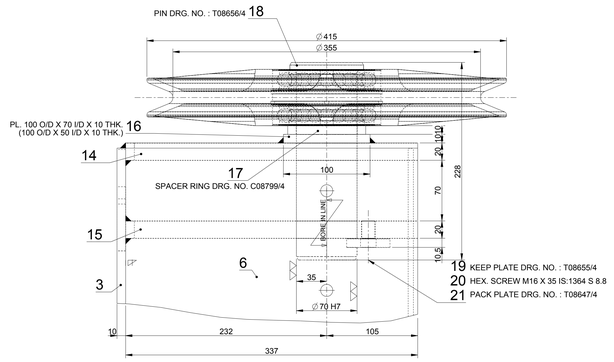

VIEW ON : C

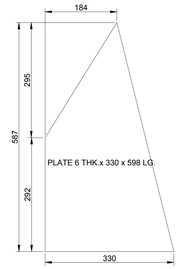

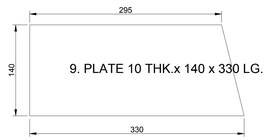

9. PLATE 10 THK.x 140 x 330 LG.

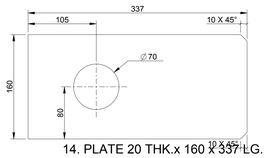

14. PLATE 20 THK.x 160 x 337 LG.

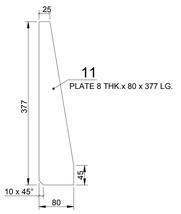

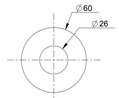

41. PL. 60 O/D X 26 I/D X 10 THK.
USE 60 O/D X 15 I/D X 10 THK.. PLT.

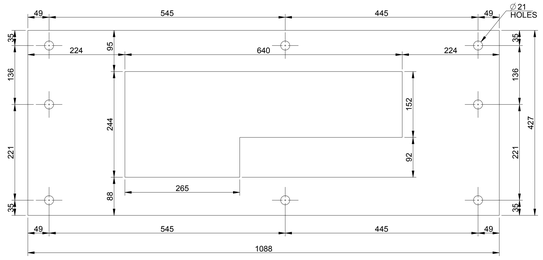

1 PLATE 10 THK.x 427 x 1088 LG.

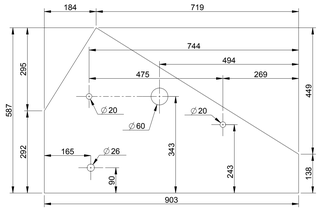

2. PLATE 10 THK.x 587 x 903 LG.

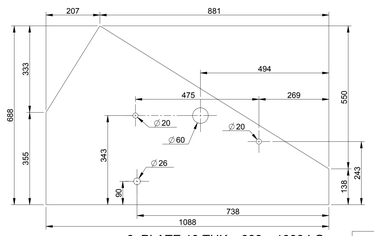

3. PLATE 10 THK.x 688 x 1088 LG.

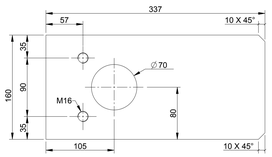

15. PLATE 20 THK.x 160 x 337 LG.

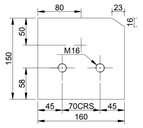

13. PLATE 20 THK.x 150 x 160 LG.

ALL WELD 4 mm. 4 mm. U.O.S.

∅70 H7	+0.030 +0.000						
∅60 H7	+0.030 +0.000						
∅26 D10	+0.149 +0.065						
FIT	TOLE.	ELE.	STRU	MECH	SEC	DATE	NAME	ISSUE	AMENDMENTS

DRAWN RONAK PA 25/11/2013
CHECKED VIKRANT / R.K.P.
APPROVED SEC. R. R. PANCHAL
MECH R. P. JARIA
STRU.
ELE.
SCALE :

UPPER ROPE SHEAVE SUPPORTING BRACKET FOR AUXILIARY BOOM

THIS DRAWING IS THE PROPERTY OF ELECON ENGINEERING CO. LTD. VALLABH VIDYANAGAR GUJARAT. LOANED TO THE RECIPIENT WHO AGREES THAT IT SHALL NOT BE GIVEN OUT COPIED OR DUPLICATED FOR THE USE OF ANOTHER BUT USE ONLY BY THE RECIPIENT FOR THE PURPOSE OF MAINTAINING THE EQUIPMENT TO WHICH IT REFERS.

MAIN GR. NO. 23
SUB GR. NO. 002
ELECON
ORDER NO. CO/2281
MACHINE NO. HM/573-574
DRAWING NO. T10393/0
ISSUE

T08560/0

ELECON EPC PROJECTS LIMITED

UPPER SHEAVE SUPPORT BRACKET (AUXILIARY BOOM)

Group No. : 23/002 Drg.No. : T10393/0

Sr.No.	Description	Qty.	Part No.
1 to 16	Structural Plate	-	T10393/0
17	Spacer	1	C08799/4
18	Pin 85/70 Dia. x 228 Lg.	1	T08656/4
19	Keep Plate	1	T08655/4
20	Hex. Screw M16 x 35 Lg.	2	IS:1364 S8.8
21	Pack Plate	1	T08647/4
22	MS Round Bar	2	T10393/0
23	Pin 60 Dia. x 272 Lg.	1	C08796/4
24	Spacer	1	C08798/4
25	Spacer	2	C08797/4
26	355 Dia. Sheave Pulley Assembly	1	C08573/2
26.1	355 Dia. Sheave Pulley	1	C08574/2
26.2	Internal Circlip	2	IS:3075
26.3	Deep Groove Ball Bearing	2	C08573/2
27	MS Flat	1	T10393/0
28	MS Flat	1	T10393/0
29	Hex. Screw M12 x 35 Lg.	2	IS:1364 S8.8
30	Hex. Nut M12	2	IS:1364 S8.0
31	Washer 48 O/D x 28 I/D x 4 Thk	2	T08669/4
32	Pin 26 Dia. x 140 Lg.	1	T10281/4
32A	Split Pin 6.3 Dia. x 45 Lg.	2	IS:549
33	Hex. Screw M16 x 40 Lg.	4	IS:1364 S8.8
34	Pack Plate	2	T08654/4

ELECON EPC PROJECTS LIMITED

Group No. : 23/002 Drg.No. : T10393/0

Sr.No.	Description	Qty.	Part No.
35	Keep Plate	2	C08801/4
36	Hex. Bolt M20 x 60 Lg.	8	IS:1364 S8.8
37	Hex. Nut M20	8	IS:1364 S8.0
38	Taper Washer M20	8	IS:5372
39	Hex. Lock Nut M20	8	IS:1364 S8.0
40	280 Dia. Sheave Pulley Assembly	2	C08585/2
40.1	280 Dia. Sheave Pulley	1	C08559/3
40.2	Internal Circlip	1	IS:3075
40.3	Deep Groove Ball Bearing	2	C08585/2
41	MS Plate	2	T10393/0

DO NOT SCALE

IF IN DOUBT ASK

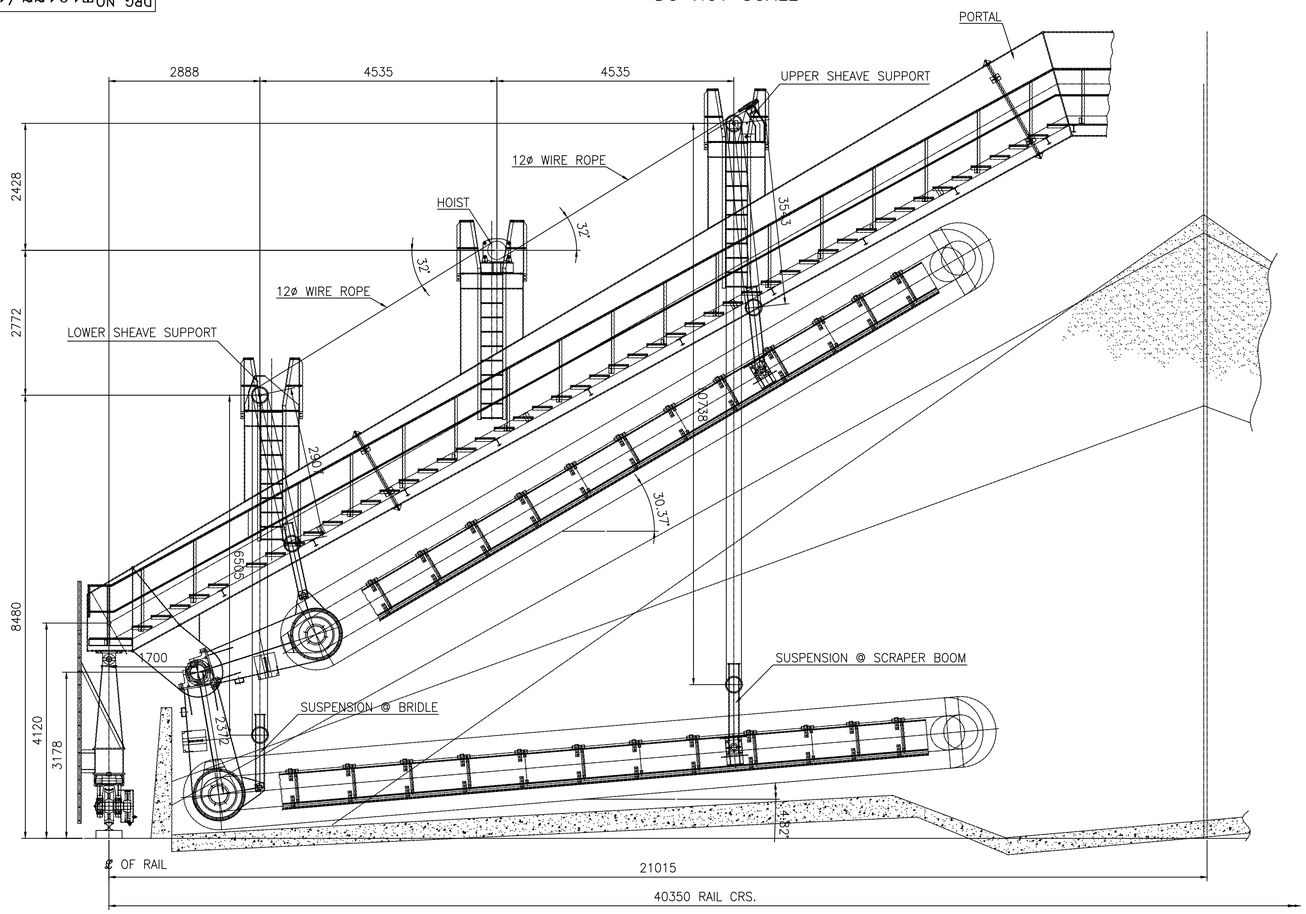

ELEVATION

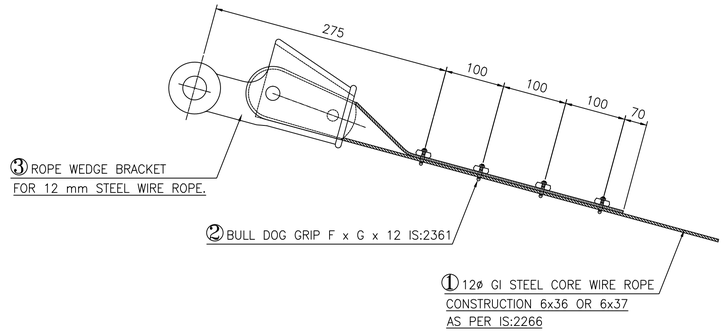

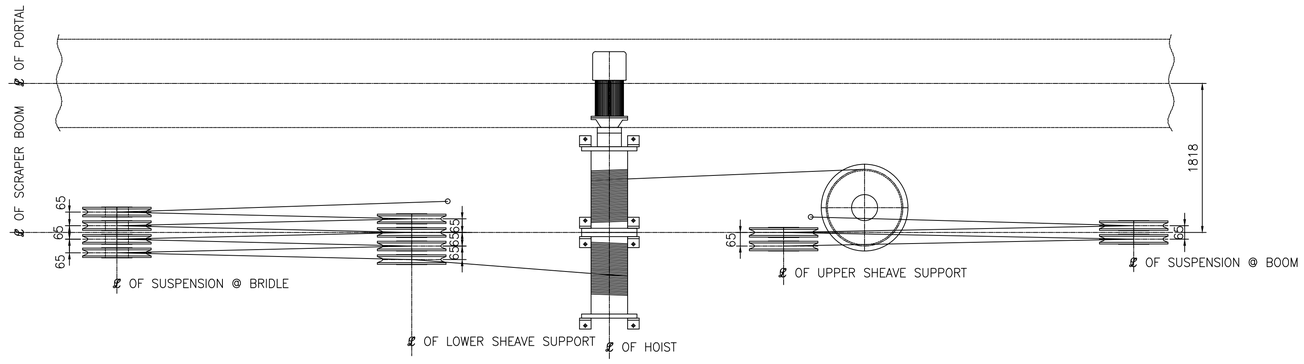

KEY PLAN
SHEAVE ARRANGEMENT

ROPE LENGTH FOR BRIDLE SUSPENSION

TOTAL LIFT = 8x(6505−2907) = 28784mm

TOTAL ROPE ON SHEAVE = 3485mm

TOTAL ROPE = (6505x8)+5315+3300 (3 NOS. DEAD TURN)+3485+2300 EXTRA

TOTAL ROPE = 66440mm APPROX.

ROPE LENGTH FOR BOOM SUSPENSION

TOTAL LIFT = 4x(10738−3543) = 28780mm

TOTAL ROPE ON SHEAVE = 1678mm

TOTAL ROPE = (10738x4)+6530+3300 (3 NOS. DEAD TURN)+1678+2300 EXTRA

TOTAL ROPE = 56760mm APPROX.

ELE.	STRU	MECH	SEC	NAME	DATE	ISSUE	AMENDMENTS

DRAWN	R. K. Patel	20/09/12
CHECK	R. R. Panchal	20/09/12
APPROVED SEC.		
APPROVED MEC	R. P. Jaria	20/09/12
APPROVED STR.		
APPROVED ELE.		

SCALE : 1:60

ARRANGEMENT OF ROPE
FOR AUXILIARY SCRAPER BOOM

THIS DRAWING IS THE PROPERTY OF ELECON ENGINEERING CO. LTD. VALLABH VIDYANAGAR GUJARAT. LOANED TO THE RECIPIENT WHO AGREES THAT IT SHALL NOT BE GIVEN OUT COPIED OR DUPLICATED FOR THE USE OF ANOTHER BUT USED ONLY BY THE RECIPIENT FOR THE PURPOSE OF MAINTAINING THE EQUIPMENT TO WHICH IT REFERS.

MAIN GR. NO. 22

ELECON

SUB GR. NO. 003

ORDER NO. CO/2281

M/C NO. HM/573

DRG. NO T10177/1

ISSUE

USER SIZE 820x570

ELECON EPC PROJECTS LIMITED

ARRANGEMENT OF WIRE ROPE (AUXILIARY BOOM)

Group No. : 23/003 Drg.No. : T10177/1

Sr.No.	Description	Qty.	Part No.
1	12Ø GI Wire Rope Steel Core 6x36 Construction As Per IS:2266 Length : 123.2 Mtr.	-	T10177/1
2	Bull Dog Grip F x G x 12	8	IS:2361
3	Rope Wedge Socket 12Ø Rope	2	T10177/1

DO NOT SCALE

IF IN DOUBT ASK

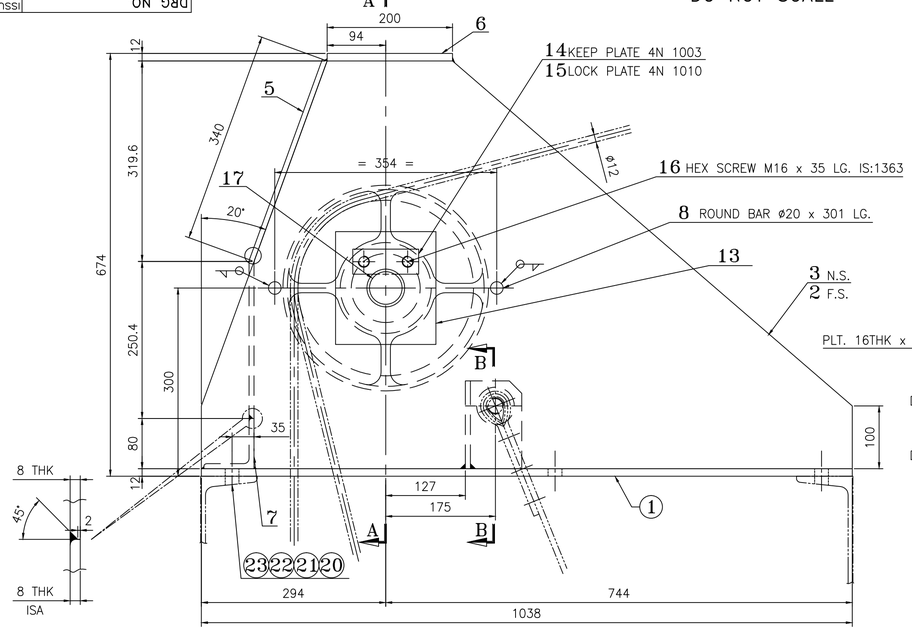

ELEVATION

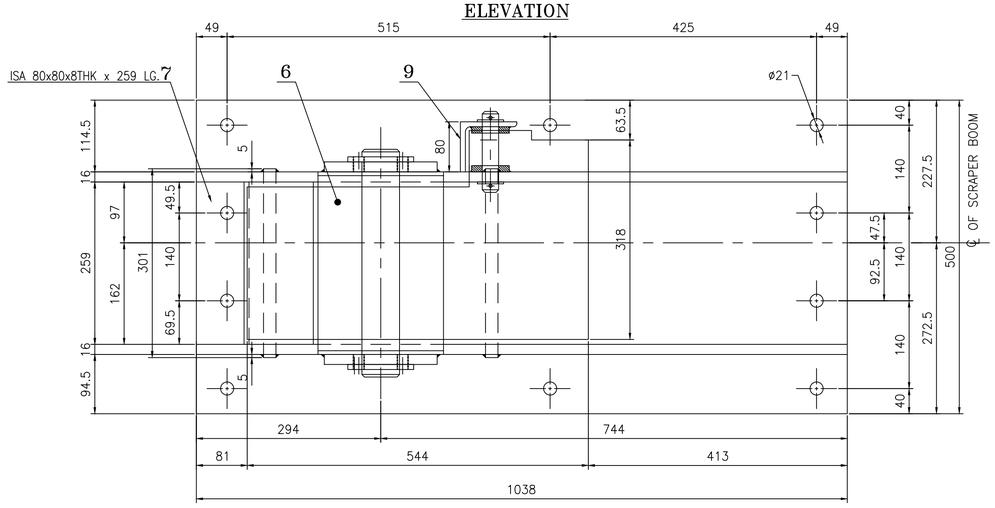

TOP PLAN

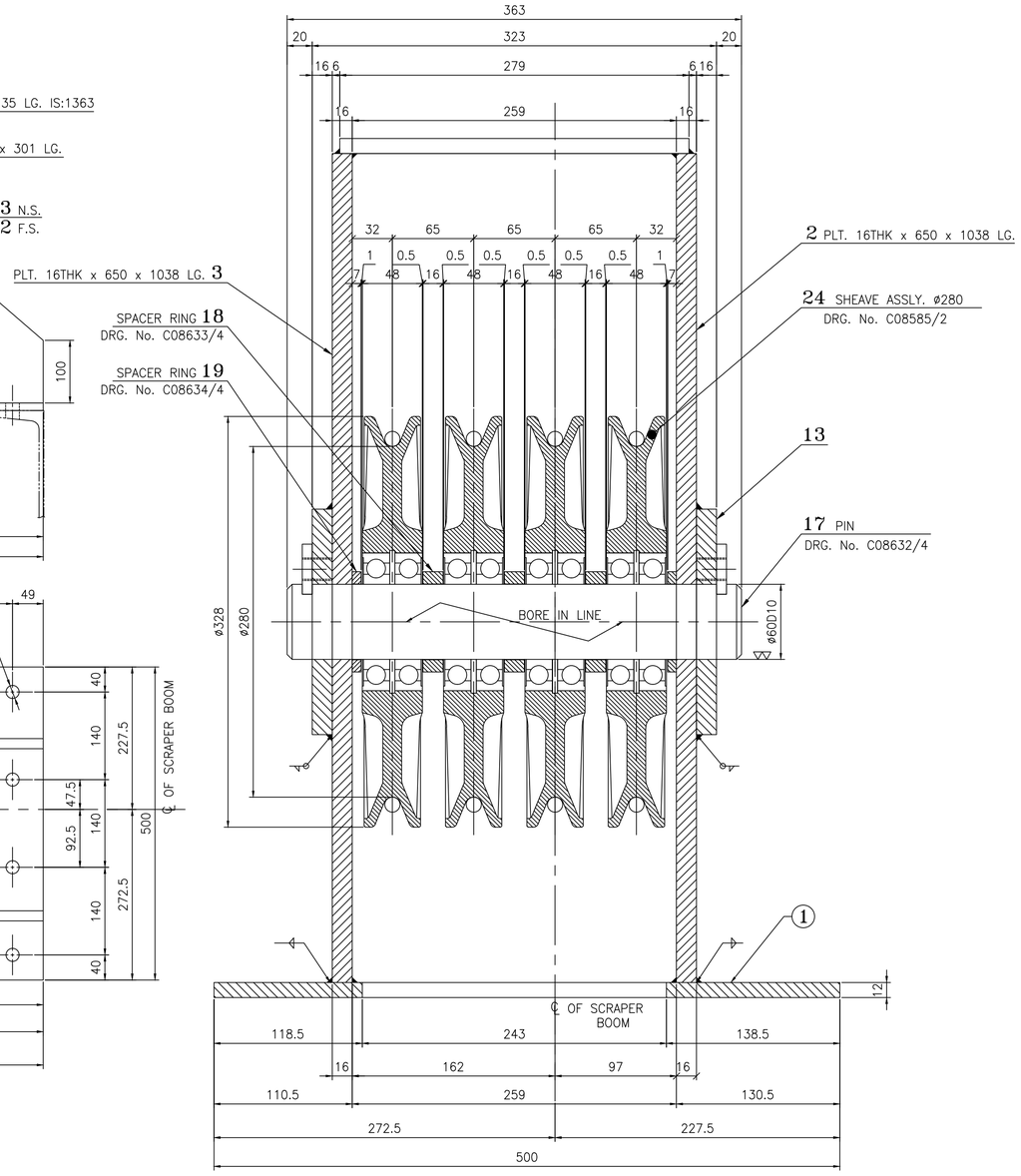

SECTION AT 'A–A'

10 PIN, DRG. No. : C08631/4
11 PLAIN WASHER A 30, IS:2016
12 SPLIT PIN 6.3x45, IS:549 STEEL

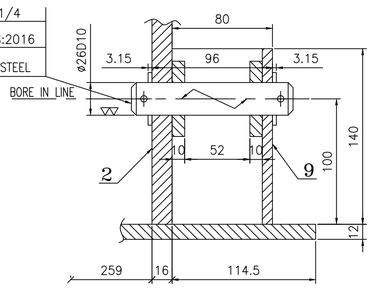

SECTION AT 'B–B'

20 HEX BOLT M20x70 LG, IS:1364 S8.8
21 HEX NUT M20, IS:1364 S8
22 TAPER WASHER 22, IS:5372
23 HEX. LOCK NUT M20, IS:1364 S8

– ALL WELDS ARE 3 mm THK FILLET U.O.NOTED.

ELE.	STRU	MECH	SEC	NAME	DATE	ISSUE	AMENDMENTS

DRAWN	H.T.Shimpi	30.10.12
CHECK	R.K.Patel	
APPROVED SEC.	R.R.Panchal	
APPROVED MEC	R.P.Jaria	
APPROVED STR.		
APPROVED ELE.		

SCALE :

LOWER ROPE SHEAVE SUPPORTING BRACKET FOR AUXILIARY BOOM.

THIS DRAWING IS THE PROPERTY OF ELECON ENGINEERING CO. LTD. VALLABH VIDYANAGAR GUJARAT. LOANED TO THE RECIPIENT WHO AGREES THAT IT SHALL NOT BE GIVEN OUT COPIED OR DUPLICATED FOR THE USE OF ANOTHER BUT USED ONLY BY THE RECIPIENT FOR THE PURPOSE OF MAINTAINING THE EQUIPMENT TO WHICH IT REFERS.

MAIN GR. NO. 23

ELECON

SUB GR. NO. 005

ORDER NO. CO/2281

M/C NO. HM/573 HM/574

DRG. NO. T10323/1

ISSUE

USER SIZE 820x570

708948/1

ELECON EPC
ELECON EPC PROJECTS LIMITED

LOWER SHEAVE SUPPORT BRACKET (AUXILIARY BOOM)

Group No. : 23/005 Drg.No. : T10323/1

Sr.No.	Description	Qty.	Part No.
1 to 9	Structural Plate	-	T10323/1
10	Pin 26 Dia. x 129 Lg.	1	C08632/4
11	Plain Washer A30	2	IS:2016
12	Split Pin 6.3 Dia. x 45 Lg.	2	IS:549
13	MS Plate	2	T10323/1
14	Keep Plate	2	4N 1003
15	Lock Plate	2	4N 1010
16	Hex. Screw M16 x 35 Lg.	4	IS:1363 S4.6
17	Pin 60 Dia. x 363 Lg.	1	C08632/4
18	Spacer Ring	3	C08633/4
19	Spacer Ring	2	C08634/4
20	Hex. Bolt M20 x 70 Lg.	10	IS:1364 S8.8
21	Hex. Nut M20	10	IS:1364 S8.0
22	Taper Washer M20	10	IS:5372
23	Hex. Lock Nut M20	10	IS:1364 S8.8
24	280 Dia. Sheave Pulley Assembly	4	C08585/2
24.1	280 Dia. Sheave Pulley	1	C08559/3
24.2	Internal Circlip	1	IS:3075
24.3	Deep Groove Ball Bearing	2	C08585/2

DO NOT SCALE

IF IN DOUBT ASK

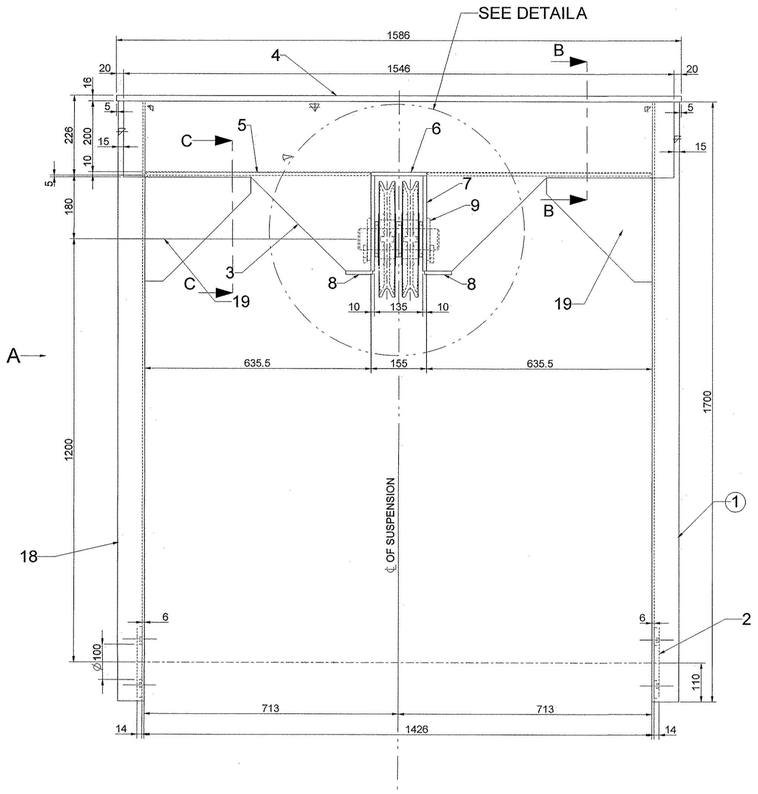

ELEVATION

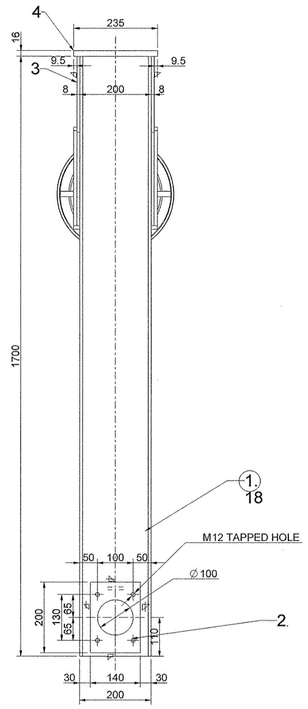

VIEW FROM -A

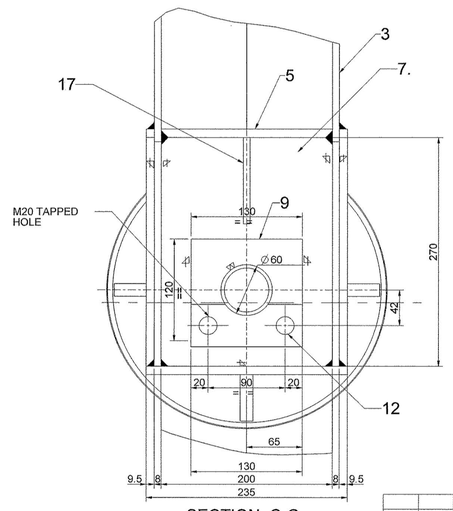

SECTION C-C

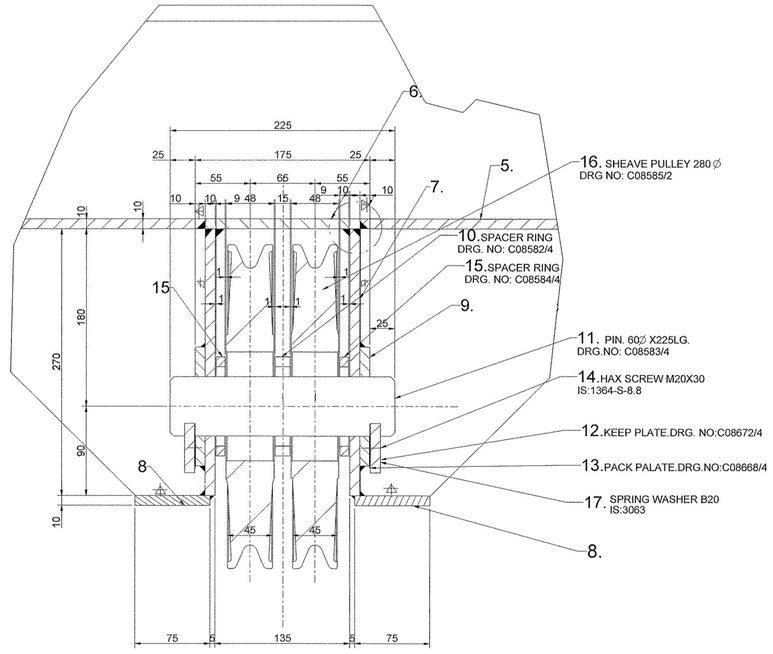

DETAIL A

ELE.	STRU	MECH	SEC	DATE	NAME	ISSUE.	AMENDMENTS

DRAWN	R.K.PATEL	05/12/12
CHECKED		
APPROVED SEC.		
MECH.		
STRU.		
ELE.		
SCALE :		

SUSPENSION FOR AUX BOOM

THIS DRAWING IS THE PROPERTY OF ELECON ENGINEERING CO. LTD. VALLABH VIDYANAGAR GUJARAT. LOANED TO THE RECIPIENT WHO AGREES THAT IT SHALL NOT BE GIVEN OUT COPIED OR DUPLICATED FOR THE USE OF ANOTHER BUT USE ONLY BY THE RECIPIENT FOR THE PURPOSE OF MAINTAINING THE EQUIPMENT TO WHICH IT REFERS.

MAIN GR. NO.	ELECON
23	
SUB GR. NO.	ORDER NO. / MACHINE NO.
007	DRAWING NO. T08811/1M / ISSUE

PAPER SIZE :- 817x570

ELECON EPC
ELECON EPC PROJECTS LIMITED

SUSPENSION FOR AUXILIARY BOOM

Group No. : 23/007 Drg.No. : T08811/1

Sr.No.	Description	Qty.	Part No.
1 to 9	Structural Plate	-	T08811/1
10	Spacer Ring	1	C08582/4
11	Pin 60 Dia. x 225 Lg.	1	C08583/4
12	Keep Plate	2	C08672/4
13	Pack Plate	2	C08668/4
14	Hex. Screw M20 x 30 Lg.	4	IS:1364 S8.8
15	Spacer Ring	2	C08584/4
16	280 Dia. Sheave Pulley Assembly	2	C08585/2
16.1	280 Dia. Sheave Pulley	1	C08559/3
16.2	Internal Circlip	1	IS:3075
16.3	Deep Groove Ball Bearing	2	C08585/2
17	Spring Washer B20	4	T08811/1
18	MS Channel	1	T08811/1
19	MS Plate	2	T08811/1

DO NOT SCALE

IF IN DOUBT ASK

DRG. NO.

ISSUE

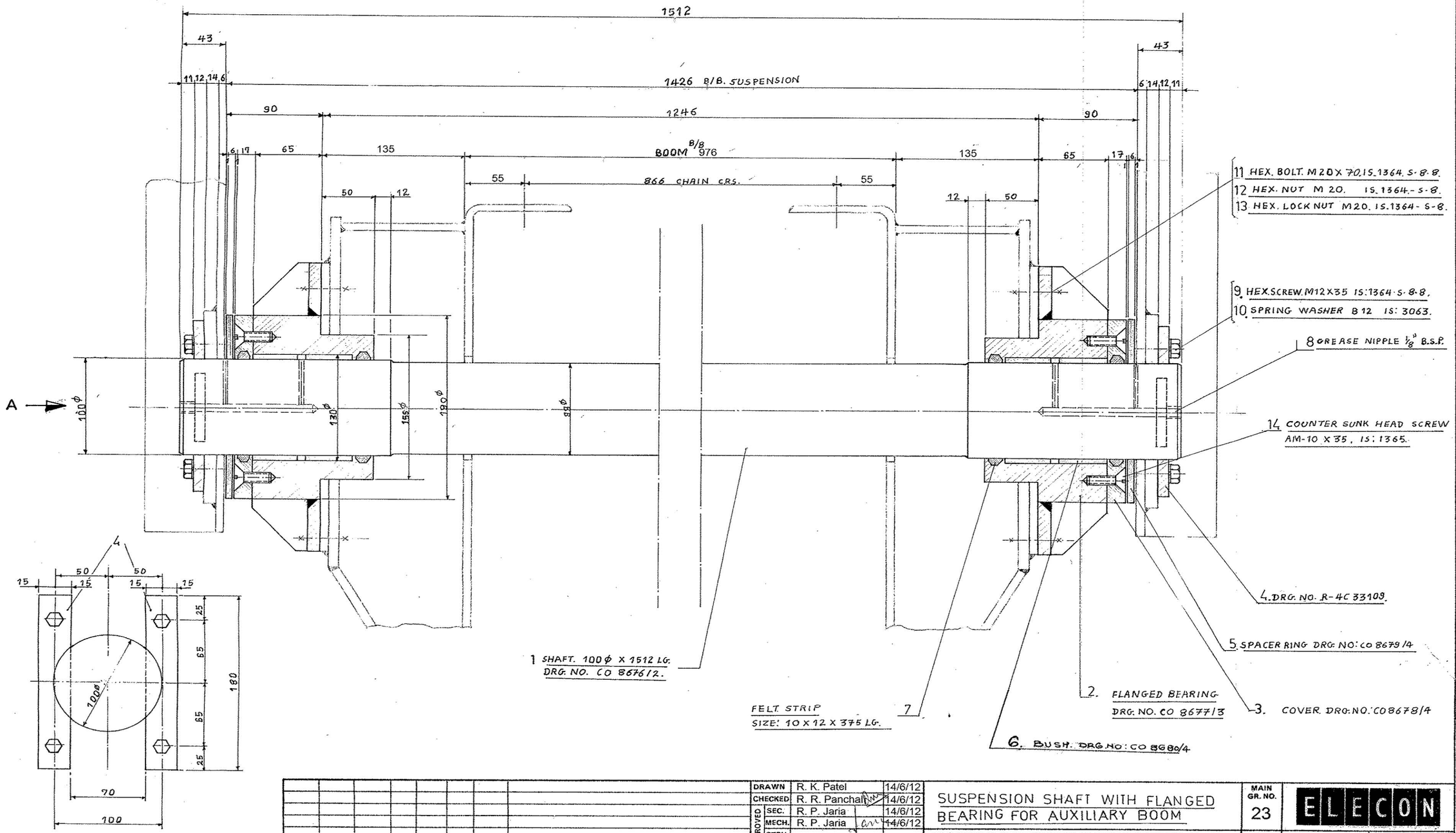

VIEW ARROW-'A'

ELE.	STRU.	MECH.	SEC.	DATE	ZONE	ISSUE	AMENDMENTS

DRAWN	R. K. Patel	14/6/12
CHECKED	R. R. Panchal	14/6/12
APPROVED SEC.	R. P. Jaria	14/6/12
APPROVED MECH.	R. P. Jaria	14/6/12
APPROVED STRU.		
APPROVED ELE.		

SCALE:-

SUSPENSION SHAFT WITH FLANGED BEARING FOR AUXILIARY BOOM

THIS DRAWING IS THE PROPERTY OF ELECON ENGINEERING CO. LTD. VALLABH VIDYANAGAR GUJARAT. LOANED TO THE RECIPIENT WHO AGREES THAT IT SHALL NOT BE GIVEN OUT COPIED OR DUPLICATED FOR THE USE OF ANOTHER BUT USED ONLY BY THE RECIPIENT FOR THE PURPOSE OF MAINTAINING THE EQUIPMENT TO WHICH IT REFERS.

MAIN GR. NO. 23

SUB GR. NO. 008

ELECON

ORDER NO.

M/C NO.

DRG. NO. T09719/2M

ISSUE

J J A2-2000-11-83

ELECON EPC
ELECON EPC PROJECTS LIMITED

SUSPENSION SHAFT WITH BEARING (AUXILIARY BOOM)

Group No. : 23/008 Drg.No. : T09719/2

Sr.No.	Description	Qty.	Part No.
1	Shaft 100 Dia. x 1512 Lg.	1	C08676/3
2	Bearing Flanged	2	C08677/3
3	Cover	2	C08678/4
4	Keep Plate	4	R.4C.33109
5	Spacer Ring	2	C08679/4
6	Bush 130 O/D x 100 I/D x 97 Lg.	2	C08680/4
7	Felt Strip 10 x 12	4	T09719/2
8	Grease Nipple 1/8" BSP	2	T09719/2
9	Hex. Screw M12 x 35 Lg.	8	IS:1364 S8.8
10	Spring Washer B12	8	IS:3063
11	Hex. Bolt M20 x 70 Lg.	12	IS:1364 S8.8
12	Hex. Nut M20	12	IS:1364 S8.0
13	Hex. Lock Nut M20	12	IS:1364 S8.0
14	Countersunk Screw AM10 x 35 Lg.	8	IS:1365 S4.8

DO NOT SCALE

IF IN DOUBT ASK

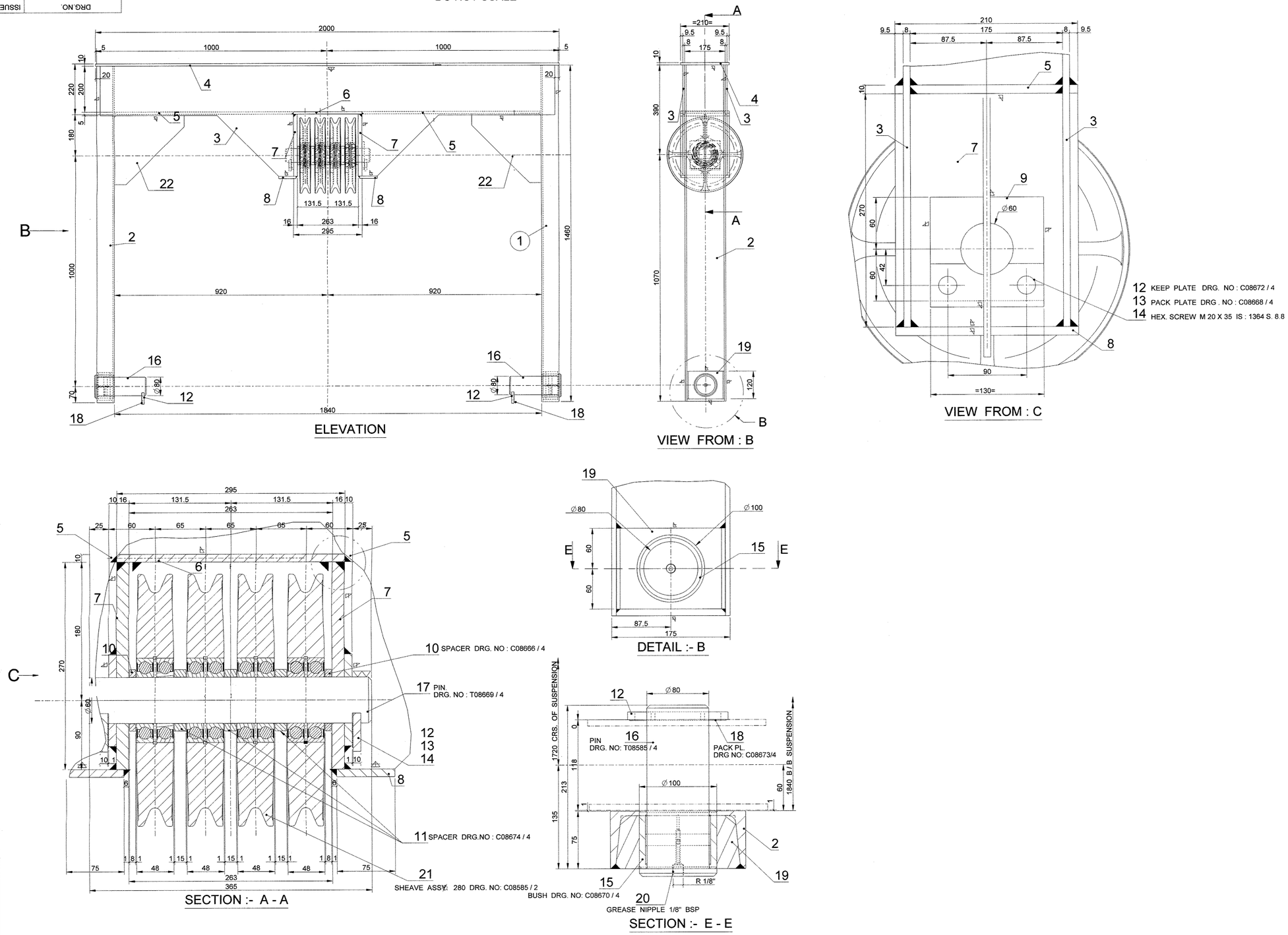

DRAWN	R.K.PATEL	05/12/12	SUSPENSION OF BRIDLE	MAIN GR. NO. 23	ELECON		
CHECKED							
APPROVED SEC.							
MECH.							
STRU				SUB GR. NO.	ORDER NO.	MACHINE NO.	
ELE.							
SCALE :				009	DRAWING NO. T08912/1M	ISSUE	

THE DRAWING IS THE PROPERTY OF ELECON ENGINEERING CO. LTD. VALLABH VIDYANAGAR GUJARAT. LOANED TO THE RECIPIENT WHO AGREES THAT IT SHALL NOT BE GIVEN OUT COPIED OR DUPLICATED FOR THE USE OF ANOTHER BUT USE ONLY BY THE RECIPIENT FOR THE PURPOSE OF MAINTAINING THE EQUIPMENT TO WHICH IT REFERS.

ELE STRU MECH SEC DATE ZONE ISSUE AMENDMENTS

PAPER SIZE :- 817x570

ELECON EPC
ELECON EPC PROJECTS LIMITED

SUSPENSION FOR BRIDLE (AUXILIARY BOOM)

Group No. : 23/009 Drg.No. : T08912/1

Sr.No.	Description	Qty.	Part No.
1 to 9	Structural Plate	-	T08912/1
10	Spacer Ring	2	C08666/4
11	Spacer Ring	3	C08674/4
12	Keep Plate	4	C08672/4
13	Pack Plate	2	C08668/4
14	Hex. Screw M20 x 35 Lg.	4	IS:1364 S8.8
15	Bush 100 O/D x 80 I/D x 75 Lg.	2	C08670/4
16	Pin 100/80 Dia. x 223 Lg.	2	T08585/4
17	Pin 60 Dia. x 365 Lg.	1	C08669/4
18	Pack Plate	2	C08673/4
19	MS Plate	2	T08912/1
20	Grease Nipple 1/8" BSP	2	T08912/1
21	280 Dia. Sheave Pulley Assembly	4	C08585/2
21.1	280 Dia. Sheave Pulley	1	C08559/3
21.2	Internal Circlip	1	IS:3075
21.3	Deep Groove Ball Bearing	2	C08585/2
22	MS Plate	2	T08912/1